Single Pole, Electrically Held, 1 Amp and Less

1MA, 1MAD, 1MADD

1MA

Standard TO-5 High Performance Relay

Qualified to MIL-R-39016/7

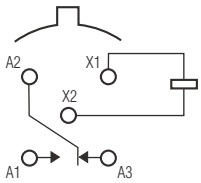

Terminal View

Product Facts

- **Hermetically sealed**
- **High shock & vibration ratings**
- **Spreader pad**
- **Excellent RF switching**

1MAD

Standard TO-5 Diode Suppressed High Performance Relay

Qualified to MIL-R-39016/23

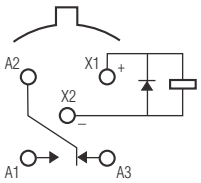

Terminal View

Product Facts

- **Suppression diode**
- **Hermetically sealed**
- **High shock & vibration ratings**
- **Spreader pad**
- **Excellent RF switching**

1MADD

Standard TO-5 Diode Suppressed/Protected High Performance Relay

Qualified to MIL-R-39016/24

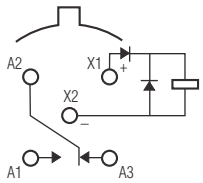

Terminal View

Product Facts

- **Suppression & protection diodes**
- **Hermetically sealed**
- **High shock & vibration ratings**
- **Spreader pad**
- **Excellent RF switching**

Electrical Characteristics

Contact Arrangement — 1 Form C (SPDT)

Contact Material — Stationary — Gold/platinum/palladium/silver alloy (gold plated) Moveable — Gold/platinum/palladium/silver alloy (gold plated)

Contact Resistance — Before Life — 100 milliohms max. (measured @ 10 mA @ 6 Vdc) After Life — 200 milliohms max. (measured @ 1 A @ 28 Vdc)

Mechanical Life Expectancy — 1 million operations

Coil Voltage — 5 to 26.5 Vdc

Coil Power — 512 mW max. @ 25°C

Duty Cycle — Continuous

Pick-up Voltage — Approximately 50% of nominal coil voltage

Pick-up Sensitivity — 100 mW max. @ 25°C

Contact Ratings

Contact Load	Type	Operations MINd.
1.0 A @ 28 Vdc	Resistive	100,000
250 mA @ 115 Vac, 60 Hz & 400 Hz	Resistive (case not grounded)	100,000
100 mA @ 115 Vac, 60 Hz & 400 Hz	Resistive	100,000
0.2 A @ 28 Vdc	Inductive (0.32 Henry)	100,000
0.1 A @ 28 Vdc	Lamp	100,000
30 µA @ 50 mVdc	Low Level	1,000,000
0.1 A @ 28 Vdc	Intermediate Current	50,000



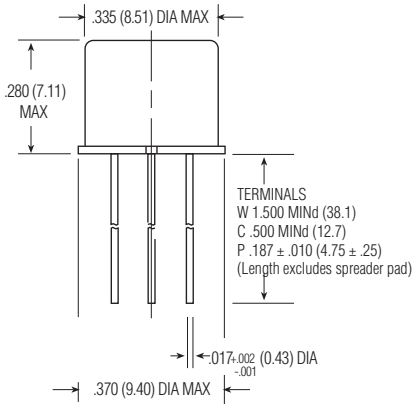

1MA/1MAD/1MADD Enclosure

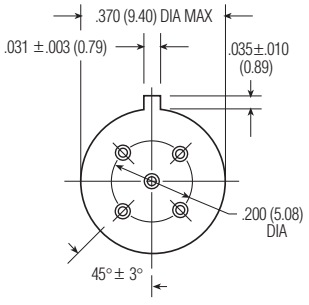

1MA/1MAD/1MADD Header

Catalog 5-1773450-5
Revised 3-13

www.te.com

Dimensions are shown for reference purposes only. Specifications subject to change.

Dimensions are in millimeters unless otherwise specified.

USA: +1 800 522 6752
Asia Pacific: +86 0 400 820 6015
UK: +44 800 267 666

For additional support numbers please visit www.te.com

Single Pole, Electrically Held, 1 Amp and Less (Continued)

1MA, 1MAD, 1MADD
(Continued)

Operating Characteristics

Timing —
Operate Time — 2.0 ms max.
Release Time —
1MA — 2.0 ms max.
1MAD/1MADD — 4.0 ms max.
(suppression diode, suppression/ steering diodes)

Contact Bounce — 1.5 ms max

Dielectric Withstanding Voltage —
Between Open Contacts — 500 Vrms 60 Hz
Between Adjacent Contacts — 500 Vrms 60 Hz
Between Contacts & Coil — 500 Vrms 60 Hz

Insulation Resistance —
10,000 megohms @ 500 Vdc
1,000 megohms @ 500 Vdc (coil to case @ +125°C)

Environmental Characteristics

Temperature Range —
-65°C to +125°C

Weight —
0.08 oz. (2.27 grms)
0.09 oz. (2.52 grms) with spreader pad attached

Vibration Resistance —
30 G's, 10 to 3,000 Hz

Shock Resistance —
75 G's, 6 ±1 ms max.

QPL Approval —
MIL-R-39016/7 (J1MA)
MIL-R-39016/23 (J1MAD)
MIL-R-39016/24 (J1MADD)

Semiconductor Characteristics

Diode —
100 Vdc peak inverse voltage (PIV)
1.0 Vdc max. transient voltage

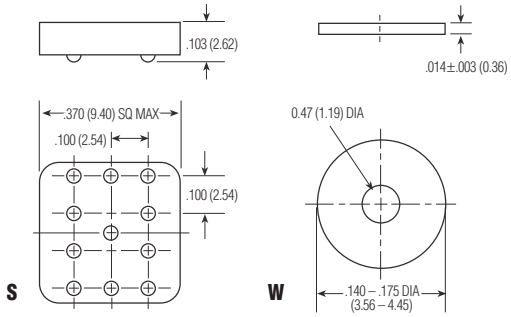

Spreader & Mounting Pads

Coil Data

Nom. Coil Voltage (Vdc)	Coil Resistance in Ohms ±10% @ 25°C (Note 1)	Coil Circuit Current mA (Max.) (Note 1&2)	Coil Circuit Current mA (Min.) (Note 1&2)	Pickup Voltage Vdc (Max.) @ 25°C (Note 2)	Base Turn On Current mA (Max.) @ 25°C	Pickup Voltage Vdc (Max.) @ 125°C (Note 2)	Base Turn On Current mA (Max.) @ 125°C	Drop-Out Voltage Vdc (Min.) @ 25°C (Note 2)	Drop-Out Voltage Vdc (Min.) @ -65°C (Note 2)	Nom. Coil Power (mW) @ 25°C	Max. Coil Voltage	Coil Desig.
1MA/1MAD												
5.0	63	n/a	n/a	2.8	n/a	3.7	n/a	0.23	0.15	397	6.0	5
6.0	125	n/a	n/a	3.5	n/a	4.5	n/a	0.28	0.18	288	8.0	6
9.0	280	n/a	n/a	5.3	n/a	6.8	n/a	0.54	0.35	289	12.0	9
12.0	500	n/a	n/a	7.0	n/a	9.0	n/a	0.63	0.40	288	16.0	12
18.0	1,130	n/a	n/a	10.5	n/a	13.5	n/a	0.91	0.58	287	24.0	18
26.5	2,000	n/a	n/a	14.2	n/a	18.0	n/a	1.37	0.89	351	32.0	26
1MADD												
5.0	50	100.0	72.7	3.5	n/a	4.5	n/a	0.23	0.15	500	6.0	5
6.0	98	62.4	46.3	4.1	n/a	5.5	n/a	0.28	0.18	367	8.0	6
9.0	280	33.7	25.9	6.3	n/a	7.8	n/a	0.54	0.35	289	12.0	9
12.0	500	25.6	20.0	8.0	n/a	10.0	n/a	0.63	0.40	288	16.0	12
18.0	1,130	17.2	13.6	11.6	n/a	14.5	n/a	0.91	0.58	287	24.0	18
26.5	2,000	14.4	11.5	15.4	n/a	19.0	n/a	1.37	0.89	351	32.0	26

Notes: 1. Coil resistance not directly measurable. Coil current should be within limits shown when tested at nominal voltage at 25°C for 5 seconds max.
2. Set base current at 3 mA to 15 mA during measurements.

Ordering Instructions

Catalog-selected Relays: The catalog number is derived by choosing the proper CODE for each of the relay characteristics in the order in which the codes are listed.

Specifying a Part Number Example*:	Type	Terminal	Diodes	Coils	Spreader/Mounting Pads
	1MA	C	D	-26	S

* The part number example shown on this page is for catalog items. For a list of specific QPL part numbers, please see the index in Section 15.

Catalog 5-1773450-5
Revised 3-13

www.te.com

Dimensions are shown for reference purposes only. Specifications subject to change.

Dimensions are in millimeters unless otherwise specified.

USA: +1 800 522 6752
Asia Pacific: +86 0 400 820 6015
UK: +44 800 267 666

For additional support numbers please visit www.te.com