## Double Pole, Electrically Held, 1 Amp and Less (Continued)

**MGS, MGSD, MGSDD**

### MGS

**Sensitive .100 Grid High Performance Relay**

**Qualified to MIL-R-39016/41**

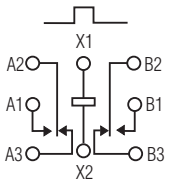


**Terminal View**

**Product Facts**

- Hermetically sealed
- High shock & vibration ratings
- Mounting pads
- Excellent RF switching

### MGSD

**Sensitive .100 Grid Diode Suppressed High Performance Relay**

**Qualified to MIL-R-39016/42**

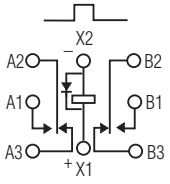


**Terminal View**

**Product Facts**

- Suppression diode
- Hermetically sealed
- High shock & vibration ratings
- Mounting pads
- Excellent RF switching

### MGSDD

**Sensitive .100 Grid Diode Suppressed/Protected High Performance Relay**

**Qualified to MIL-R-39016/43**

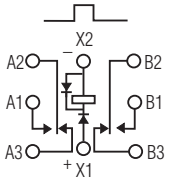


**Terminal View**

**Product Facts**

- Suppression & protection diodes
- Hermetically sealed
- High shock & vibration ratings
- Mounting pads
- Excellent RF switching

### Electrical Characteristics

**Contact Arrangement** — 2 Form C (DPDT)

**Contact Material** — Stationary — Gold/platinum/palladium/silver (gold plated) Moveable — Gold/platinum/palladium/silver (gold plated)

**Contact Resistance** — Before Life — 100 milliohms max. (measured @ 10 mA @ 6 Vdc) After Life — 200 milliohms max. (measured @ 1 A @ 28 Vdc)

**Mechanical Life Expectancy** — 1 million operations

**Coil Voltage** — 5 to 48 Vdc

**Coil Power** — 565 mW max. @ 25°C

**Duty Cycle** — Continuous

**Pick-up Voltage** — Approximately 50% of nominal coil voltage

**Pick-up Sensitivity** — 60 mW max. @ 25°C

### Contact Ratings

| Contact Load | Type | Operations Min. |
|---|---|---|
| 1.0 A @ 28 Vdc | Resistive | 100,000 |
| 250 mA @ 115 Vac, 60 Hz & 400 Hz | Resistive (case not grounded) | 100,000 |
| 100 mA @ 115 Vac, 60 Hz & 400 Hz | Resistive | 100,000 |
| 0.2 A @ 28 Vdc | Inductive (0.32 Henry) | 100,000 |
| 0.1 A @ 28 Vdc | Lamp | 100,000 |
| 30 µA @ 50 mVdc | Low Level | 1,000,000 |
| 0.1 A @ 28 Vdc | Intermediate Current | 50,000 |



**MGS**

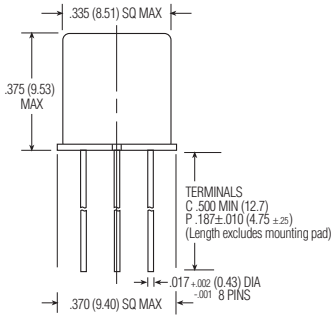


**MGS/MGSD/MGSDD Enclosure**

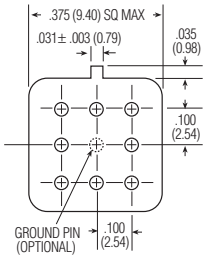


**MGS/MGSD/MGSDD Header**



Catalog 5-1773450-5
Revised 3-13

www.te.com

Dimensions are shown for reference purposes only. Specifications subject to change.

Dimensions are in millimeters unless otherwise specified.

USA: +1 800 522 6752
Asia Pacific: +86 0 400 820 6015
UK: +44 800 267 666

For additional support numbers please visit www.te.com

## Double Pole, Electrically Held, 1 Amp and Less (Continued)



### MGS, MGSD, MGSDD
(Continued)

### Operating Characteristics

**Timing** —
Operate Time — 4.0 ms max.
Release Time —
MGS — 2.0 ms max.
MGSD/MGSDD — 7.5 ms max.
(suppression diode, protection/ suppression diodes)

**Contact Bounce** — 1.5 ms max.

**Dielectric Withstanding Voltage** —
Between Open Contacts —
500 Vrms 60 Hz
Between Adjacent Contacts —
500 Vrms 60 Hz
Between Contacts & Coil —
500 Vrms 60 Hz

**Insulation Resistance** —
10,000 megohms min. @ 500 Vdc
1,000 megohms @ 500 Vdc
(coil to case @ +125°C)

### Environmental Characteristics

**Temperature Range** —
-65°C to +125°C

**Weight** —
0.09 oz. (2.55 gms)
0.129 oz. (3.45 gms) w/ mounting pad attached

**Vibration Resistance** —
30 G's, 10 to 3,000 Hz

**Shock Resistance** —
75 G's, 6 ±1 ms max.

**QPL Approval** —
MIL-R-39016/41 (JMGS)
MIL-R-39016/42 (JMGSD)
MIL-R-39016/43 (JMGSDD)

### Semiconductor Characteristics

**Diode** —
100 Vdc peak inverse voltage (PIV)
1.0 Vdc max. transient voltage

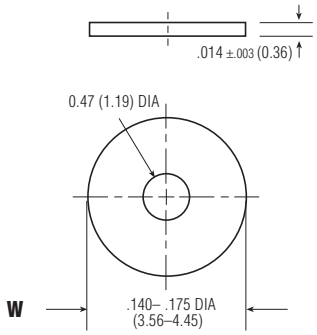


**MGS/MGSD/MGSDD Mounting Pad**

### Coil Data

| Nom. Coil Voltage (Vdc) | Coil Resistance in Ohms ±10% @ 25°C (Note) | Coil Circuit Current mA (Max.) (Note) | Coil Circuit Current mA (Min.) (Note) | Pickup Voltage Vdc (Max.) @ 25°C | Pickup Voltage Vdc (Max.) @ 125°C | Drop-Out Voltage Vdc (Min.) @ 25°C | Drop-Out Voltage Vdc (Min.) @ -65°C | Nom. Coil Power (mW) @ 25°C | Max. Coil Voltage | Coil Desig. |
|---|---|---|---|---|---|---|---|---|---|---|
| MGS/MGSD | | | | | | | | | | |
| 5.0 | 100 | n/a | n/a | 2.6 | 3.5 | 0.23 | 0.12 | 250 | 7.5 | 5 |
| 6.0 | 200 | n/a | n/a | 3.4 | 4.5 | 0.28 | 0.18 | 180 | 10.0 | 6 |
| 9.0 | 400 | n/a | n/a | 4.85 | 6.8 | 0.55 | 0.35 | 203 | 15.0 | 9 |
| 12.0 | 800 | n/a | n/a | 7.0 | 9.0 | 0.64 | 0.41 | 180 | 20.0 | 12 |
| 18.0 | 1,600 | n/a | n/a | 9.8 | 13.5 | 0.92 | 0.59 | 203 | 30.0 | 18 |
| 26.5 | 3,200 | n/a | n/a | 14.0 | 18.0 | 1.4 | 0.89 | 219 | 40.0 | 26 |
| 36.0 | 6,500 | n/a | n/a | 20.0 | 27.0 | 1.8 | 1.25 | 199 | 57.0 | 36 |
| 48.0 | 11,000 | n/a | n/a | 25.8 | 36.0 | 2.4 | 1.60 | 209 | 75.0 | 48 |
| MGSDD | | | | | | | | | | |
| 5.0 | 64 | 78.1 | 56.8 | 2.9 | 3.7 | 0.8 | 0.7 | 391 | 7.5 | 5 |
| 6.0 | 125 | 48.9 | 36.3 | 4.0 | 4.8 | 0.9 | 0.8 | 288 | 10.0 | 6 |
| 9.0 | 400 | 23.6 | 18.1 | 6.1 | 8.0 | 1.1 | 0.9 | 203 | 15.0 | 9 |
| 12.0 | 800 | 16.0 | 12.5 | 7.8 | 11.0 | 1.3 | 1.0 | 180 | 20.0 | 12 |
| 18.0 | 1,600 | 12.2 | 9.6 | 11.3 | 14.5 | 1.5 | 1.1 | 203 | 30.0 | 18 |
| 26.5 | 3,200 | 9.0 | 7.2 | 15.2 | 19.0 | 1.7 | 1.3 | 219 | 40.0 | 26 |
| 36.0 | 6,500 | 6.1 | 4.9 | 21.7 | 27.2 | 2.3 | 1.7 | 199 | 57.0 | 36 |
| 48.0 | 11,000 | 4.8 | 3.9 | 27.8 | 34.8 | 2.8 | 2.0 | 209 | 75.0 | 48 |

**Note:** Coil resistance not directly measurable. Coil current should be within limits shown when tested at nominal voltage at 25°C for 5 seconds max.

### Ordering Instructions

Catalog-selected Relays: The catalog number is derived by choosing the proper CODE for each of the relay characteristics in the order in which the codes are listed.

| Specifying a Part Number Example: | Type | Terminals | Diodes | Ground Pins | Coils | Mounting Pads |
|---|---|---|---|---|---|---|
| | MGS | C | D | G | -26 | W |

* The part number example shown on this page is for catalog items. For a list of specific QPL part numbers, please see the index in Section 15.



Catalog 5-1773450-5
Revised 3-13

www.te.com

Dimensions are shown for reference purposes only. Specifications subject to change.

Dimensions are in millimeters unless otherwise specified.

USA: +1 800 522 6752
Asia Pacific: +86 0 400 820 6015
UK: +44 800 267 666

For additional support numbers please visit www.te.com