Double Pole, Electrically Held, 1 Amp and Less (Continued)

MS, MSD, MSDD

MS

Sensitive TO-5 High Performance Relay

Qualified to MIL-R-39016/11

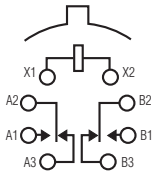

Terminal View

Product Facts

- **Hermetically sealed**
- **High shock & vibration ratings**
- **Spreader pads**
- **Excellent RF switching**

MSD

Sensitive TO-5 Diode Suppressed High Performance Relay

Qualified to MIL-R-39016/16

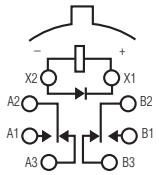

Terminal View

Product Facts

- **Suppression diode**
- **Hermetically sealed**
- **High shock & vibration ratings**
- **Spreader pads**
- **Excellent RF switching**

MSDD

Sensitive TO-5 Diode Suppressed/Protected High Performance Relay

Qualified to MIL-R-39016/21

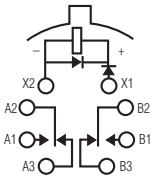

Terminal View

Product Facts

- **Suppression & protection diodes**
- **Hermetically sealed**
- **High shock & vibration ratings**
- **Spreader pads**
- **Excellent RF switching**

Electrical Characteristics

Contact Arrangement — 2 Form C (DPDT)

Contact Material — Stationary — Gold/platinum/palladium/silver alloy (gold plated) Moveable — Gold/platinum/palladium/silver alloy (gold plated)

Contact Resistance — Before Life — 100 milliohms max. (measured @ 10 mA @ 6 Vdc) After Life — 200 milliohms max. (measured @ 1 A @ 28 Vdc)

Mechanical Life Expectancy — 1 million operations

Coil Voltage — 5 to 48 Vdc

Coil Power — 565 mW max. @ 25°C

Duty Cycle — Continuous

Pick-up Voltage — Approximately 50% of nominal coil voltage

Pick-up Sensitivity — 60 mW max. @ 25°C

Contact Ratings

Contact Load	Type	Operations Min.
1.0 A @ 28 Vdc	Resistive	100,000
250 mA @ 115 Vac, 60 Hz & 400 Hz	Resistive (case not grounded)	100,000
100 mA @ 115 Vac, 60 Hz & 400 Hz	Resistive	100,000
0.2 A @ 28 Vdc	Inductive (0.32 Henry)	100,000
0.1 A @ 28 Vdc	Lamp	100,000
30 µA @ 50 mVdc	Low Level	1,000,000
0.1 A @ 28 Vdc	Intermediate Current	50,000



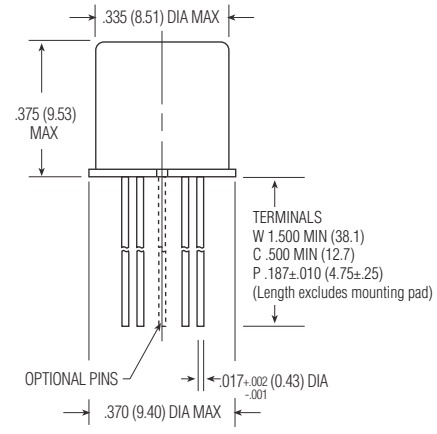

Enclosure

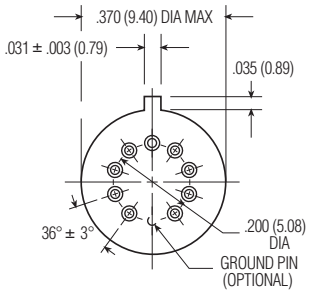

Header

Catalog 5-1773450-5
Revised 3-13

www.te.com

Dimensions are shown for reference purposes only. Specifications subject to change.

Dimensions are in millimeters unless otherwise specified.

USA: +1 800 522 6752
Asia Pacific: +86 0 400 820 6015
UK: +44 800 267 666

For additional support numbers please visit www.te.com

Double Pole, Electrically Held, 1 Amp and Less (Continued)

MS, MSD, MSDD (Continued)

Operating Characteristics

Timing —
Operate Time — 4.0 ms max.
Release Time —
MS — 2.0 ms max.
MSD/MSDD — 7.5 ms max.
(suppression diode, suppression/ steering diodes)

Contact Bounce — 1.5 ms max

Dielectric Withstanding Voltage —
Between Open Contacts —
500 Vrms 60 Hz
Between Adjacent Contacts —
500 Vrms 60 Hz
Between Contacts & Coil —
500 Vrms 60 Hz

Insulation Resistance —
10,000 megohms min. @ 500 Vdc
1,000 megohms @ 500 Vdc
(coil to case @ +125°C)

Environmental Characteristics

Temperature Range —
-65°C to +125°C

Weight —
0.12 oz. (3.40 grms)
0.13 oz. (3.45 grms) with spreader pad attached

Vibration Resistance —
30 G's, 10 to 3,000 Hz

Shock Resistance —
75 G's, 6 ±1 ms max.

QPL Approval —
MIL-R-39016/11 (JMS)
MIL-R-39016/16 (JMSD)
MIL-R-39016/21 (JMSDD)

Semiconductor Characteristics

Diode —
100 Vdc peak inverse voltage (PIV)
1.0 Vdc max. transient voltage

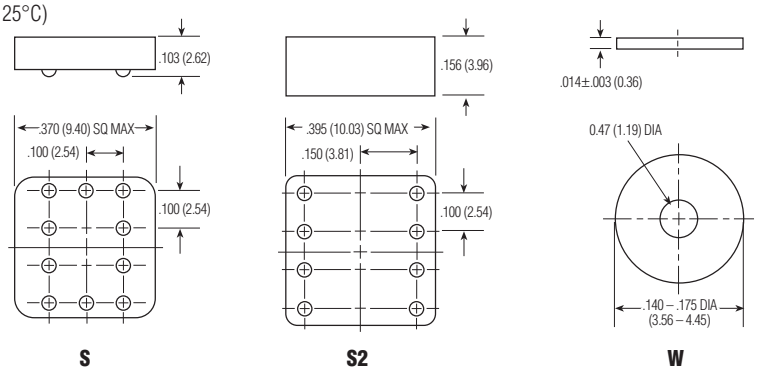

S **S2** **W**

Spreader & Mounting Pads

Coil Data

Nom. Coil Voltage (Vdc)	Coil Resistance in Ohms ±10% @ 25°C (Note 1)	Coil Circuit Current mA (Max.) (Note 1&2)	Coil Circuit Current mA (Min.) (Note 1&2)	Pickup Voltage Vdc (Max.) @ 25°C (Note 2)	Base Turn On Current mA (Max.) @ 25°C	Pickup Voltage Vdc (Max.) @ 125°C (Note 2)	Base Turn On Current mA (Max.) @ 125°C	Drop-Out Voltage Vdc (Min.) @ 25°C (Note 2)	Drop-Out Voltage Vdc (Min.) @ -65°C (Note 2)	Nom. Coil Power (mW) @ 25°C	Max. Coil Voltage	Coil Desig.
MS/MSD												
5.0	100	n/a	n/a	2.6	n/a	3.5	n/a	0.23	0.12	250	7.5	5
6.0	200	n/a	n/a	3.4	n/a	4.5	n/a	0.28	0.18	180	10.0	6
9.0	400	n/a	n/a	4.85	n/a	6.8	n/a	0.55	0.35	203	15.0	9
12.0	850	n/a	n/a	7.0	n/a	9.0	n/a	0.64	0.41	169	20.0	12
18.0	1,600	n/a	n/a	9.8	n/a	13.5	n/a	0.92	0.59	203	30.0	18
26.5	3,300	n/a	n/a	14.0	n/a	18.0	n/a	1.4	0.89	213	40.0	26
36.0	6,500	n/a	n/a	20.0	n/a	27.0	n/a	1.8	1.25	199	57.0	36
48.0	11,000	n/a	n/a	25.8	n/a	36.0	n/a	2.4	1.60	209	75.0	48
MSDD												
5.0	64	78.1	56.8	2.9	n/a	3.7	n/a	0.8	0.7	391	7.0	5
6.0	125	48.9	36.3	4.0	n/a	4.8	n/a	0.9	0.8	288	10.0	6
9.0	400	23.6	18.1	6.1	n/a	8.0	n/a	1.1	0.9	203	15.0	9
12.0	850	15.0	11.7	7.8	n/a	11.0	n/a	1.3	1.0	169	20.0	12
18.0	1,600	12.2	9.6	11.3	n/a	14.5	n/a	1.5	1.1	203	30.0	18
26.5	3,300	8.8	7.0	15.2	n/a	19.0	n/a	1.7	1.3	213	40.0	26
36.0	6,500	6.1	4.9	21.7	n/a	27.2	n/a	2.3	1.7	199	57.0	36
48.0	11,000	4.8	3.9	27.8	n/a	34.8	n/a	2.8	2.0	209	75.0	48

Notes: 1. Coil resistance not directly measurable. Coil current should be within limits shown when tested at nominal voltage at 25°C for 5 seconds max.
2. Set base current at 3 mA to 15 mA during measurements.

Ordering Instructions

Catalog-selected Relays: The catalog number is derived by choosing the proper CODE for each of the relay characteristics in the order in which the codes are listed.

Specifying a Part Number Example:	Type	Terminal	Diodes	Ground Pins	Coils	Spreader/Mounting Pads
	MS	C	D	G	-26	S

* The part number example shown on this page is for catalog items. For a list of specific QPL part numbers, please see the index in Section 15.

Catalog 5-1773450-5
Revised 3-13

www.te.com

Dimensions are shown for reference purposes only. Specifications subject to change.

Dimensions are in millimeters unless otherwise specified.

USA: +1 800 522 6752
Asia Pacific: +86 0 400 820 6015
UK: +44 800 267 666

For additional support numbers please visit www.te.com