THIS DRAWING IS UNPUBLISHED. RELEASED FOR PUBLICATION – , – .
© COPYRIGHT – By – ALL RIGHTS RESERVED.

LOC	DIST
DF	DO

REVISIONS

P	LTR	DESCRIPTION	DATE	DWN	APVD
	N1	REVISED PER ECO-11-005139	21MAR11	RK	HMR

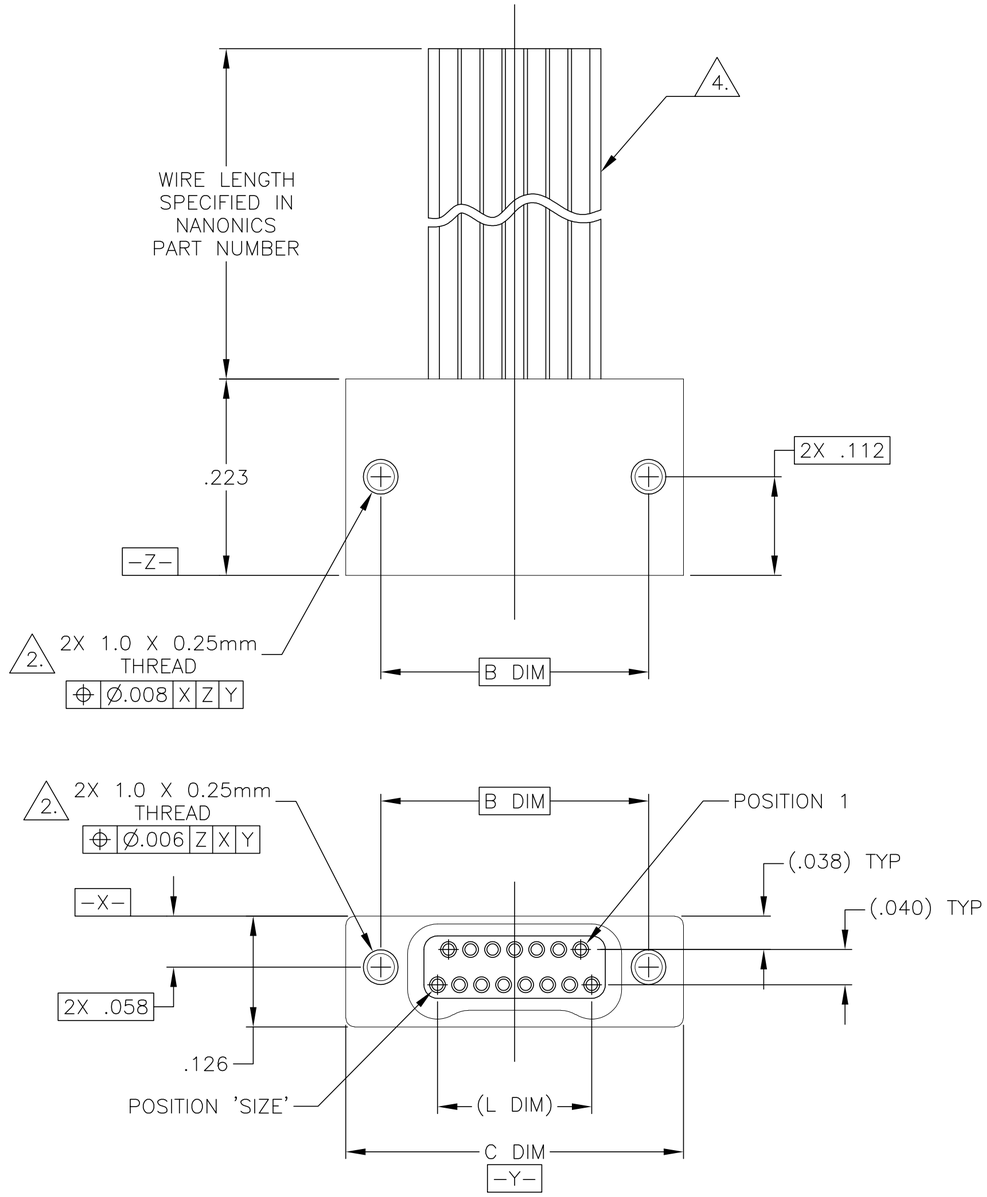

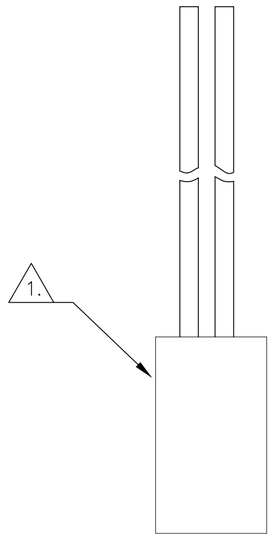

SIZE	B DIM	C DIM ±.0050	(L DIM)
09	.229	.3085	(.100)
15	.304	.3835	(.175)
25	.429	.5085	(.300)
37	.579	.6585	(.450)
51	.754	.8335	(.625)
65	.929	1.0085	(.800)

1. SHELL OPTIONS (TO BE SPECIFIED IN NANONICS PART NUMBER):
   METAL: 6061-T6 ALUMINUM, ELECTROLESS NICKEL PLATED PER MIL-C-26074 (STANDARD) OR GOLD PLATED PER MIL-G-45204
   303 STAINLESS STEEL, PASSIVATED PER SAE-AMS-QQ-P-35
   INSULATOR MATERIAL FOR ALL METAL SHELLS IS LIQUID CRYSTAL POLYMER (LCP) PER MIL-M-24519 OR PER ASTM D5138
   PLASTIC: LIQUID CRYSTAL POLYMER (LCP) PER MIL-M-24519 OR PER ASTM D5138
2. STANDARD 1.0 X 0.25mm MOUNTING AND JACKSCREW THREADS ARE SHOWN FOR REFERENCE ONLY AND MUST BE SPECIFIED IN THE NANONICS PART NUMBER WHEN REQUIRED. 1.2 X 0.25mm THREADS ALSO AVAILABLE.
3. MOUNTING HARDWARE IS AVAILABLE WITH THIS CONFIGURATION (NOT SHOWN). HARDWARE MUST BE SPECIFIED IN THE NANONICS PART NUMBER. CONSULT TE CONNECTIVITY FOR DETAILS.
4. THIS CONFIGURATION MAY BE TERMINATED WITH 28 AWG SOLID, 30 AWG STRANDED OR SMALLER WIRE, OR RIBBON CABLE. CONDUCTOR TYPE AND LENGTH MUST BE SPECIFIED IN NANONICS PART NUMBER.
5. THIS DRAWING PREVIOUSLY IDENTIFIED AS NANONICS N10138/202

THIS DRAWING IS A CONTROLLED DOCUMENT.

DIMENSIONS: INCHES

TOLERANCES UNLESS OTHERWISE SPECIFIED:
0 PLC ± –
1 PLC ± –
2 PLC ± .010
3 PLC ± .005
4 PLC ± –
ANGLES ± 1°

MATERIAL: SEE NOTES
FINISH: SEE NOTES

DWN D. RYAN 21 APR 92
CHK E. PAULUS 15 MAY 98
APVD M. STORRY 5 APR 01
PRODUCT SPEC –
APPLICATION SPEC –
WEIGHT –

TE Connectivity

NAME: RECEPTACLE ASSEMBLY, FLYING LEADS, TWO ROW DUALOBE, PLASTIC OR METAL

SIZE	CAGE CODE	DRAWING NO	RESTRICTED TO
A2	00779	C-1589476	–

CUSTOMER DRAWING | SCALE 8:1 | SHEET 1 OF 1 | REV N1

1589476