tyco Electronics

FPC Connector Family

AMP

Product Facts

- **Available in ZIF and non-ZIF**
- **Available in 0.3, 0.5, 1.0, and 1.25mm Centerlines**
- **Available Tin-Lead or Lead-Free**
- **SMT, Thu-Hole, Vertical and Right-Angle**
- **Right-Angle Available Top or Bottom Contact**

Need more information?

Call Technical Support at the numbers listed below.

Technical Support is staffed with specialists well versed in Tyco Electronics products. They can provide you with:

- Technical support
- Catalogs
- Technical Documents
- Product Samples
- Authorized Distributor Locations

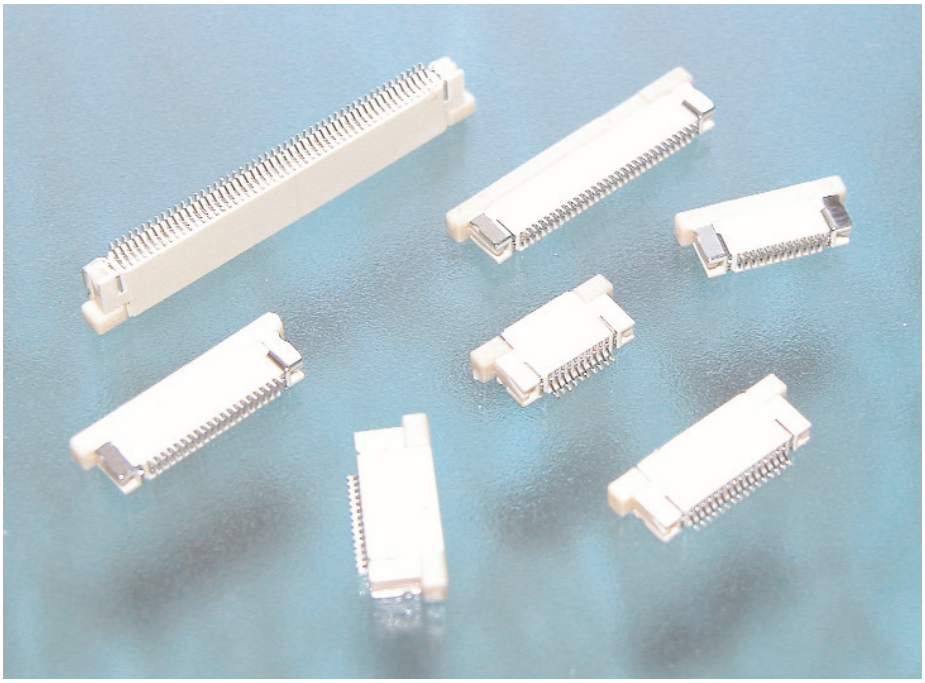

As the demands for higher-density packaging of electronic equipment increases, the use of flexible printed circuits (FPC) to reduce size, weight and assembly costs has expanded. FPC is finding wide acceptance in the computer industry, particularly in such applications as Lap Top, Notebook, Palm Top and Note Pad Computers. Other markets include: Disk Drives, Printers, Plotters, Copiers, Cellular Phones, and Medical Equipment.

Tyco Electronics FPC connectors have been developed to meet the challenges of this expanding market. Available in centerline spacings 0.3 [.012], 0.5 [.020],1.0 [.039], and 1.25 [.049] all incorporating low profile and light-weight features.

For custom parts, modification, or any inquiries, please contact your nearest Tyco Electronics Representatives or visit our website http://www.tycoelectronics.com

Part Number	Pb Free Part Number	Pitch	ZIF	SMT / Thu-Hole	Vertical / Right-Angle	Contact Type	Circuit Range	Type A/B	Page Number
1746237	1746237	0.3	ZIF	SMT	Right-Angle	Bottom	27, 39	A	2
1470731	1734742	0.5	ZIF	SMT	Vertical	—	4 - 40P	A	3
1470359	1734839	0.5	ZIF	SMT	Right-Angle	Top	5 - 50P	Inline	4 & 5
1470360	1734592	0.5	ZIF	SMT	Right-Angle	Bottom	5 - 50P	Inline	6 & 7
440347	1734248	1.0	ZIF	SMT	Vertical	—	3 - 40P	2 Row	8 & 9
487951	84953	1.0	ZIF	SMT	Right-Angle	Top	4 - 30P	Inline	10 &11
487952	84952	1.0	ZIF	SMT	Right-Angle	Bottom	4 - 30P	Inline	12 &13
84982	84982	1.0	NonZIF	SMT	Vertical	—	4 - 40P	A	14 &15
84981	84981	1.0	NonZIF	SMT	Right-Angle	Top	4 - 40P	Inline	16 &17
1470852	1734798	1.0	NonZIF	SMT	Right-Angle	Bottom	4 - 30P	Inline	18 &19
84984	84984	1.0	NonZIF	Thu-Hole	Vertical	—	4 - 40P	A	20 & 21
84983	84983	1.0	NonZIF	Thu-Hole	Right-Angle	Top	4 - 40P	A	22 & 23
1470790	1734779	1.0	NonZIF	Thu-Hole	Right-Angle	Bottom	4 - 30P	B	24 & 25
84534	84534	1.25	NonZIF	Thu-Hole	Vertical	—	4 - 40P	A	26 & 27
84533	84533	1.25	NonZIF	Thu-Hole	Right-Angle	Top	4 - 40P	A	28 & 29

©2006 by Tyco Electronics Corporation.
All Rights Reserved.
Tyco amd AMP are trademarks.

Catalog 1-1773440-6
Revised 05-06

www.tycoelectronics.com

Dimensions are in millimeters and inches unless otherwise specified. Values in brackets are standard equivalents.

Dimensions are shown for reference purposes only. Specifications subject to change.

USA: 1-800-522-6752
Canada: 1-905-470-4425
Mexico: 01-800-733-8926
C. America: 52-55-5-729-0425

South America: 55-11-3611-1514
Hong Kong: 852-2735-1628
Japan: 81-44-844-8013
UK: 44-141-810-8967

Product Dimensions

0.3 mm, FPC Connector, Flip Lock Type

Part Number: 1746237

Material and Finish

Housing — Thermoplastic, UL 94V-0
Contacts — Phosphor bronze

Technical Documents

Product Specification — 108-5924

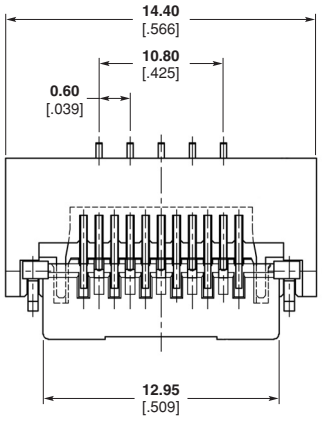

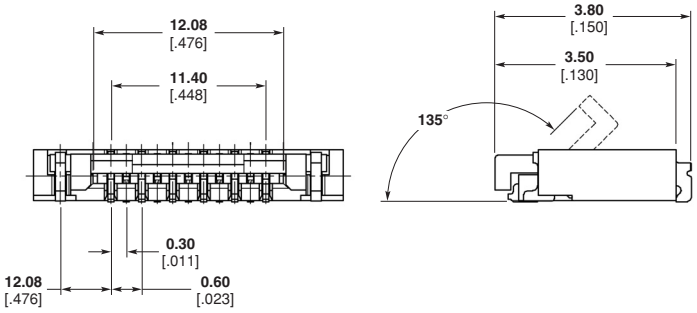

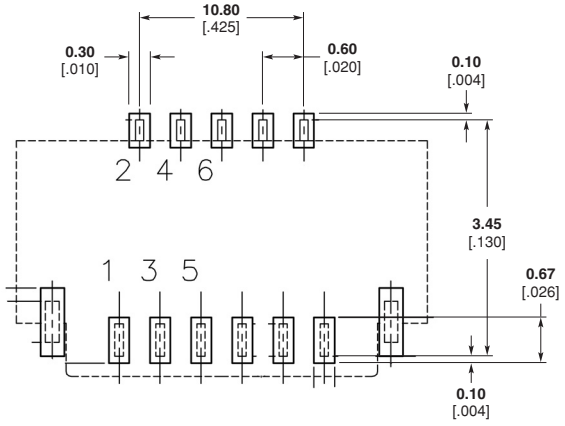

Recommended PCB Layout

Catalog 1-1773440-6
Revised 05-06

www.tycoelectronics.com

Dimensions are in millimeters and inches unless otherwise specified. Values in brackets are standard equivalents.

Dimensions are shown for reference purposes only. Specifications subject to change.

USA: 1-800-522-6752
Canada: 1-905-470-4425
Mexico: 01-800-733-8926
C. America: 52-55-5-729-0425

South America: 55-11-3611-1514
Hong Kong: 852-2735-1628
Japan: 81-44-844-8013
UK: 44-141-810-8967

0.5 mm, FPC/FFC Connector, ZIF, Vertical, SMT, Type A

Part Number 1470731
Lead Free 1734742

Material and Finish

Housing — High temperature thermoplastic, UL 94V-0, brown color
Actuator — High temperature thermoplastic, UL 94V-0, natural color
Contacts — Phosphor bronze
Board Mounts — Brass

Technical Documents

Product Specification — 108-57324

Product Dimensions (Continued)

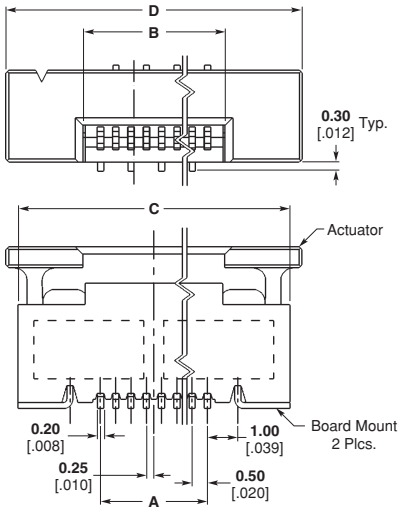

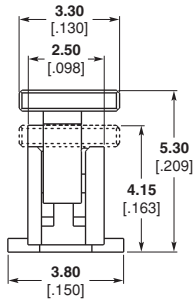

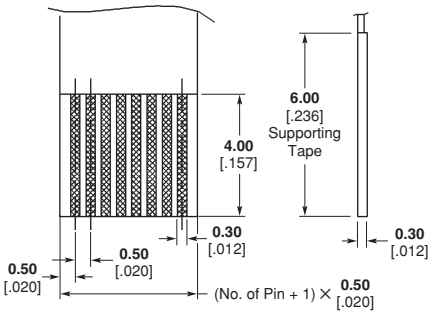

Recommended FFC Layout

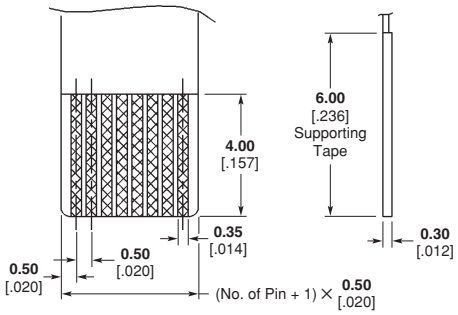

Recommended FPC Layout

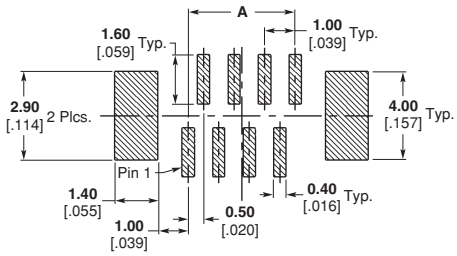

Recommended PCB Layout

Part Number	No. of Contacts	Dimension			
		A	B	C	D
1-1470731-6	16	**7.50** .295	**8.65** .341	**12.90** .508	**13.70** .539
1-1470731-8	18	**8.50** .335	**9.65** .380	**13.90** .547	**14.70** .579
2-1470731-0	20	**9.50** .374	**10.65** .419	**14.90** .587	**15.70** .618
2-1470731-4	24	**11.50** .453	**12.65** .498	**16.90** .665	**17.70** .697
3-1470731-0	30	**14.50** .571	**15.65** .616	**19.90** .783	**20.70** .815
4-1470731-0	40	**19.50** .768	**20.65** .813	**25.90** 1.020	**25.70** 1.012

Catalog 1-1773440-6
Revised 05-06

www.tycoelectronics.com

Dimensions are in millimeters and inches unless otherwise specified. Values in brackets are standard equivalents.

Dimensions are shown for reference purposes only. Specifications subject to change.

USA: 1-800-522-6752
Canada: 1-905-470-4425
Mexico: 01-800-733-8926
C. America: 52-55-5-729-0425

South America: 55-11-3611-1514
Hong Kong: 852-2735-1628
Japan: 81-44-844-8013
UK: 44-141-810-8967

Product Dimensions (Continued)

0.5 mm, FPC Connector, SMT, Top Contact

Part Number **1470359**
Lead Free **1734839**

Material and Finish

Housing — High temperature thermoplastic, UL 94V-0, natural color

Actuator — Thermoplastic, UL 94V-0, ivory color

Hold Down — Phosphor bronze

Contact — Phosphor bronze

Technical Documents

Product Specification — 108-57238

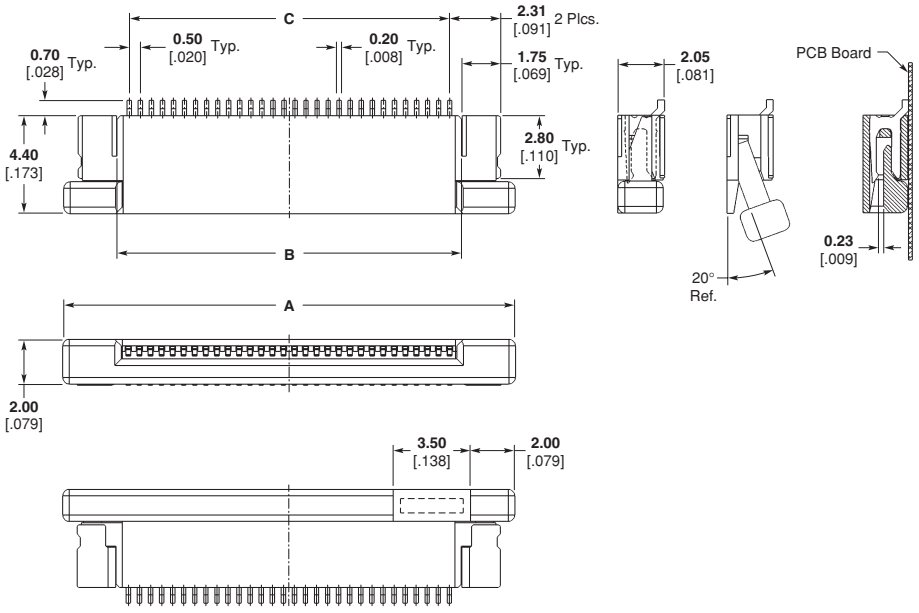

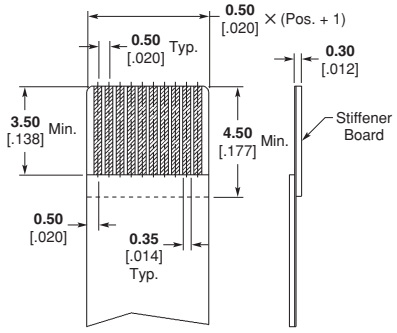

Recommended FPC Layout

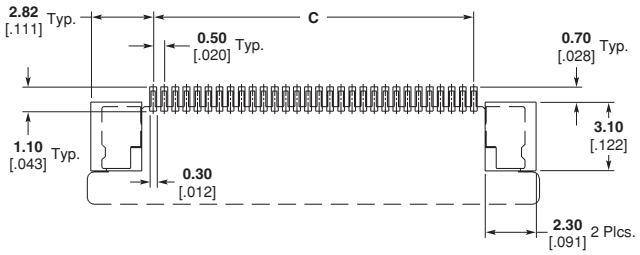

Recommended PCB Layout

Catalog 1-1773440-6
Revised 05-06

www.tycoelectronics.com

Dimensions are in millimeters and inches unless otherwise specified. Values in brackets are standard equivalents.

Dimensions are shown for reference purposes only. Specifications subject to change.

USA: 1-800-522-6752
Canada: 1-905-470-4425
Mexico: 01-800-733-8926
C. America: 52-55-5-729-0425

South America: 55-11-3611-1514
Hong Kong: 852-2735-1628
Japan: 81-44-844-8013
UK: 44-141-810-8967

Product Dimensions (Continued)

0.5 mm, FPC Connector, SMT, Top Contact

Part Number 1470359
Lead Free 1734839

Part Number	Position	Dimension		
		A	B	C
1470359-5	5	**7.93** .312	**3.10** .122	**2.00** .078
1470359-6	6	**8.43** .331	**3.60** .141	**2.50** .098
1470359-7	7	**8.93** .351	**4.10** .161	**3.00** .118
1470359-8	8	**9.43** .371	**4.60** .181	**3.50** .137
1470359-9	9	**9.93** .390	**5.10** .200	**4.00** .157
1-1470359-0	10	**10.43** .410	**5.60** .220	**4.50** .177
1-1470359-1	11	**10.93** .430	**6.10** .240	**5.00** .196
1-1470359-2	12	**11.43** .450	**6.60** .259	**5.50** .216
1-1470359-3	13	**11.93** .469	**7.10** .279	**6.00** .236
1-1470359-4	14	**12.43** .489	**7.60** .299	**6.50** .255
1-1470359-5	15	**12.93** .509	**8.10** .318	**7.00** .275
1-1470359-6	16	**13.43** .528	**8.60** .338	**7.50** .295
1-1470359-7	17	**13.93** .548	**9.10** .358	**8.00** .314
1-1470359-8	18	**14.43** .568	**9.60** .377	**8.50** .334
1-1470359-9	19	**14.93** .587	**10.10** .397	**9.00** .354
2-1470359-0	20	**15.43** .607	**10.60** .417	**9.50** .374
2-1470359-1	21	**15.93** .627	**11.10** .437	**10.00** .393
2-1470359-2	22	**16.43** .646	**11.60** .456	**10.50** .413
2-1470359-3	23	**16.93** .666	**12.10** .476	**11.00** .433
2-1470359-4	24	**17.43** .686	**12.60** .496	**11.50** .452
2-1470359-5	25	**17.93** .705	**13.10** .515	**12.00** .472
2-1470359-6	26	**18.43** .725	**13.60** .535	**12.50** .492
2-1470359-7	27	**18.93** .745	**14.10** .555	**13.00** .511

Part Number	Position	Dimension		
		A	B	C
2-1470359-8	28	**19.43** .764	**14.60** .574	**13.50** .531
2-1470359-9	29	**19.93** .784	**15.10** .594	**14.00** .551
3-1470359-0	30	**20.43** .804	**15.60** .614	**14.50** .570
3-1470359-1	31	**20.93** .824	**16.10** .633	**15.00** .590
3-1470359-2	32	**21.43** .843	**16.60** .653	**15.50** .610
3-1470359-3	33	**21.93** .863	**17.10** .673	**16.00** .629
3-1470359-4	34	**22.43** .883	**17.60** .692	**16.50** .649
3-1470359-5	35	**22.93** .902	**18.10** .712	**17.00** .669
3-1470359-6	36	**23.43** .922	**18.60** .732	**17.50** .688
3-1470359-7	37	**23.93** .942	**19.10** .751	**18.00** .708
3-1470359-8	38	**24.43** .961	**19.60** .771	**18.50** .728
3-1470359-9	39	**24.93** .981	**20.10** .791	**19.00** .748
4-1470359-0	40	**25.43** 1.001	**20.60** .811	**19.50** .767
4-1470359-1	41	**25.93** 1.020	**21.10** .830	**20.00** .787
4-1470359-2	42	**26.43** 1.040	**21.60** .850	**20.50** .807
4-1470359-3	43	**26.93** 1.060	**22.10** .870	**21.00** .826
4-1470359-4	44	**27.43** 1.079	**22.60** .890	**21.50** .846
4-1470359-5	45	**27.93** 1.099	**23.10** .909	**22.00** .866
4-1470359-6	46	**28.43** 1.119	**23.60** .929	**22.50** .885
4-1470359-7	47	**28.93** 1.138	**24.10** .949	**23.00** .905
4-1470359-8	48	**29.43** 1.158	**24.60** .968	**23.50** .925
4-1470359-9	49	**29.93** 1.178	**25.10** .988	**24.00** .944
5-1470359-0	50	**30.43** 1.198	**25.60** 1.008	**24.50** .964

Catalog 1-1773440-6
Revised 05-06

www.tycoelectronics.com

Dimensions are in millimeters and inches unless otherwise specified. Values in brackets are standard equivalents.

Dimensions are shown for reference purposes only. Specifications subject to change.

USA: 1-800-522-6752
Canada: 1-905-470-4425
Mexico: 01-800-733-8926
C. America: 52-55-5-729-0425

South America: 55-11-3611-1514
Hong Kong: 852-2735-1628
Japan: 81-44-844-8013
UK: 44-141-810-8967

Product Dimensions (Continued)

0.5 mm, FPC Connector, SMT, Bottom Contact

Part Number **1470360**
Lead Free **1734592**

Material and Finish

Housing — High temperature thermoplastic, UL 94V-0, natural color
Actuator — Thermoplastic, UL 94V-0, ivory color
Hold Down — Phosphor bronze
Contact — Phosphor bronze

Technical Documents

Product Specification — 108-57238

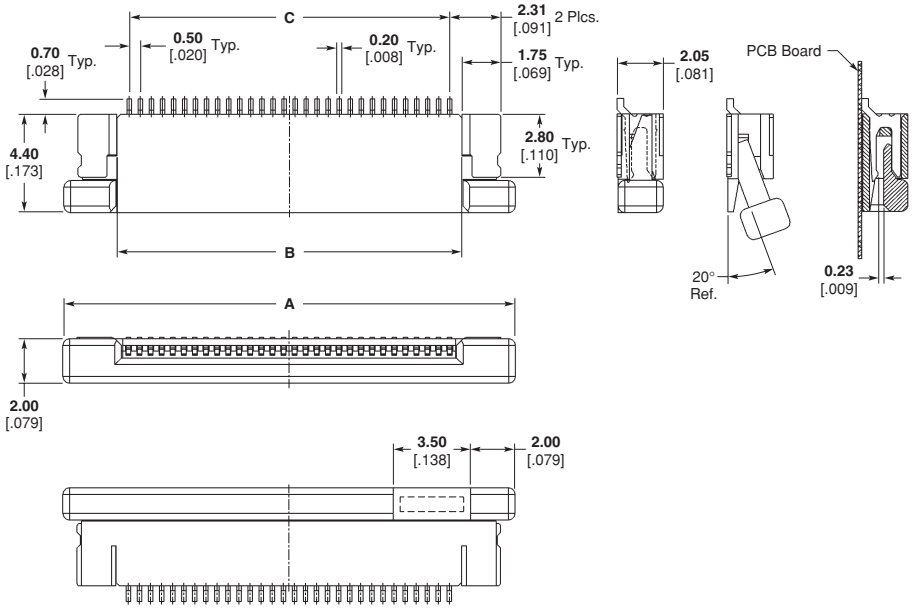

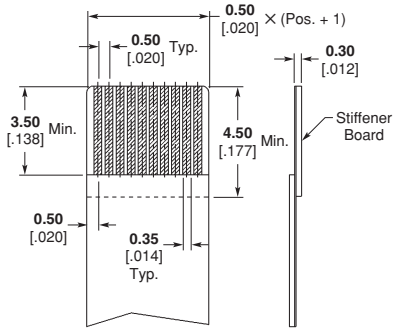

Recommended FPC Layout

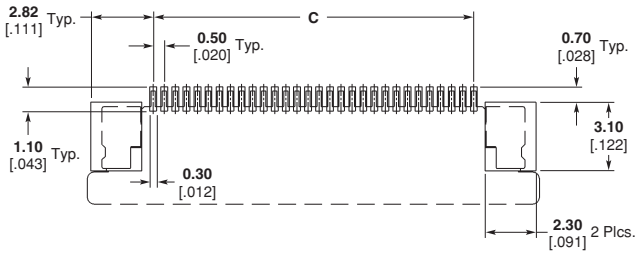

Recommended PCB Layout

Catalog 1-1773440-6
Revised 05-06

www.tycoelectronics.com

Dimensions are in millimeters and inches unless otherwise specified. Values in brackets are standard equivalents.

Dimensions are shown for reference purposes only. Specifications subject to change.

USA: 1-800-522-6752
Canada: 1-905-470-4425
Mexico: 01-800-733-8926
C. America: 52-55-5-729-0425

South America: 55-11-3611-1514
Hong Kong: 852-2735-1628
Japan: 81-44-844-8013
UK: 44-141-810-8967

Product Dimensions (Continued)

0.5 mm, FPC Connector, SMT, Bottom Contact

Part Number 1470360
Lead Free 1734592

Part Number	Position	Dimension		
		A	B	C
1470360-5	5	**7.93** .312	**3.10** .122	**2.00** .078
1470360-6	6	**8.43** .331	**3.60** .141	**2.50** .098
1470360-7	7	**8.93** .351	**4.10** .161	**3.00** .118
1470360-8	8	**9.43** .371	**4.60** .181	**3.50** .137
1470360-9	9	**9.93** .390	**5.10** .200	**4.00** .157
1-1470360-0	10	**10.43** .410	**5.60** .220	**4.50** .177
1-1470360-1	11	**10.93** .430	**6.10** .240	**5.00** .196
1-1470360-2	12	**11.43** .450	**6.60** .259	**5.50** .216
1-1470360-3	13	**11.93** .469	**7.10** .279	**6.00** .236
1-1470360-4	14	**12.43** .489	**7.60** .299	**6.50** .255
1-1470360-5	15	**12.93** .509	**8.10** .318	**7.00** .275
1-1470360-6	16	**13.43** .528	**8.60** .338	**7.50** .295
1-1470360-7	17	**13.93** .548	**9.10** .358	**8.00** .314
1-1470360-8	18	**14.43** .568	**9.60** .377	**8.50** .334
1-1470360-9	19	**14.93** .587	**10.10** .397	**9.00** .354
2-1470360-0	20	**15.43** .607	**10.60** .417	**9.50** .374
2-1470360-1	21	**15.93** .627	**11.10** .437	**10.00** .393
2-1470360-2	22	**16.43** .646	**11.60** .456	**10.50** .413
2-1470360-3	23	**16.93** .666	**12.10** .476	**11.00** .433
2-1470360-4	24	**17.43** .686	**12.60** .496	**11.50** .452
2-1470360-5	25	**17.93** .705	**13.10** .515	**12.00** .472
2-1470360-6	26	**18.43** .725	**13.60** .535	**12.50** .492
2-1470360-7	27	**18.93** .745	**14.10** .555	**13.00** .511

Part Number	Position	Dimension		
		A	B	C
2-1470360-8	28	**19.43** .764	**14.60** .574	**13.50** .531
2-1470360-9	29	**19.93** .784	**15.10** .594	**14.00** .551
3-1470360-0	30	**20.43** .804	**15.60** .614	**14.50** .570
3-1470360-1	31	**20.93** .824	**16.10** .633	**15.00** .590
3-1470360-2	32	**21.43** .843	**16.60** .653	**15.50** .610
3-1470360-3	33	**21.93** .863	**17.10** .673	**16.00** .629
3-1470360-4	34	**22.43** .883	**17.60** .692	**16.50** .649
3-1470360-5	35	**22.93** .902	**18.10** .712	**17.00** .669
3-1470360-6	36	**23.43** .922	**18.60** .732	**17.50** .688
3-1470360-7	37	**23.93** .942	**19.10** .751	**18.00** .708
3-1470360-8	38	**24.43** .961	**19.60** .771	**18.50** .728
3-1470360-9	39	**24.93** .981	**20.10** .791	**19.00** .748
4-1470360-0	40	**25.43** 1.001	**20.60** .811	**19.50** .767
4-1470360-1	41	**25.93** 1.020	**21.10** .830	**20.00** .787
4-1470360-2	42	**26.43** 1.040	**21.60** .850	**20.50** .807
4-1470360-3	43	**26.93** 1.060	**22.10** .870	**21.00** .826
4-1470360-4	44	**27.43** 1.079	**22.60** .890	**21.50** .846
4-1470360-5	45	**27.93** 1.099	**23.10** .909	**22.00** .866
4-1470360-6	46	**28.43** 1.119	**23.60** .929	**22.50** .885
4-1470360-7	47	**28.93** 1.138	**24.10** .949	**23.00** .905
4-1470360-8	48	**29.43** 1.158	**24.60** .968	**23.50** .925
4-1470360-9	49	**29.93** 1.178	**25.10** .988	**24.00** .944
5-1470360-0	50	**30.43** 1.198	**25.60** 1.008	**24.50** .964

Catalog 1-1773440-6
Revised 05-06

www.tycoelectronics.com

Dimensions are in millimeters and inches unless otherwise specified. Values in brackets are standard equivalents.

Dimensions are shown for reference purposes only. Specifications subject to change.

USA: 1-800-522-6752
Canada: 1-905-470-4425
Mexico: 01-800-733-8926
C. America: 52-55-5-729-0425

South America: 55-11-3611-1514
Hong Kong: 852-2735-1628
Japan: 81-44-844-8013
UK: 44-141-810-8967

Product Dimensions (Continued)

1.0 mm, FPC Connector, ZIF Vertical, SMT

Part Number 440347
Lead Free 1734248

Material and Finish

Housing — Thermoplastic, UL 94V-0, black color

Actuator — PPS, UL 94V-0, brown color

Contact — Phosphor bronze

Technical Documents

Product Specification — 108-57080

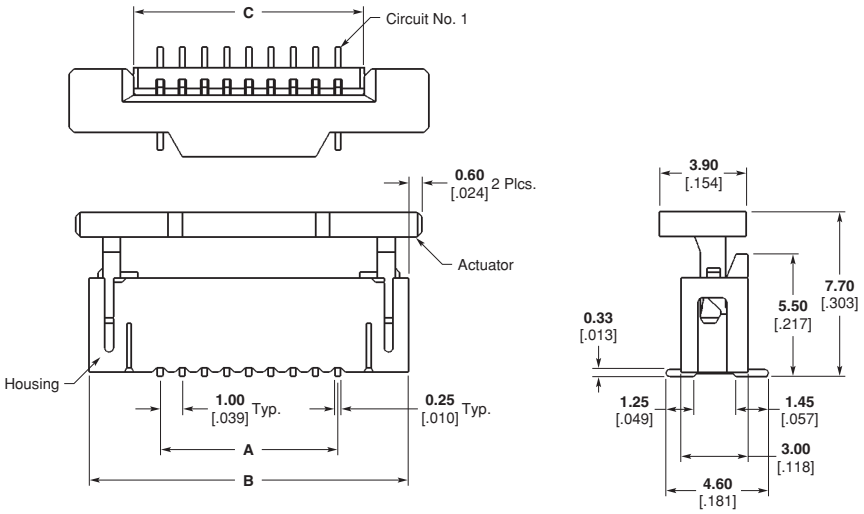

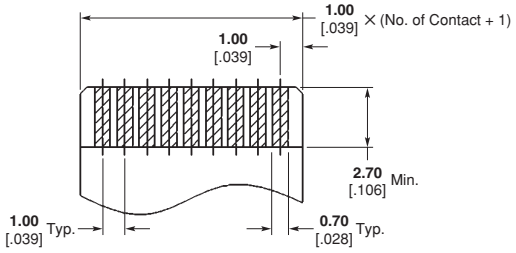

Recommended FPC Layout

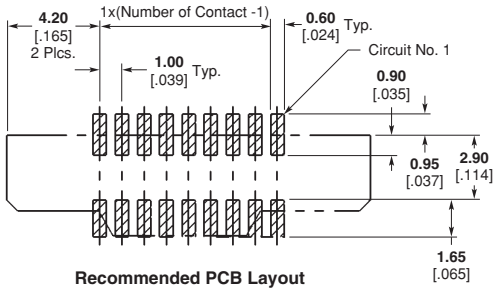

Recommended PCB Layout

Catalog 1-1773440-6
Revised 05-06

www.tycoelectronics.com

Dimensions are in millimeters and inches unless otherwise specified. Values in brackets are standard equivalents.

Dimensions are shown for reference purposes only. Specifications subject to change.

USA: 1-800-522-6752
Canada: 1-905-470-4425
Mexico: 01-800-733-8926
C. America: 52-55-5-729-0425

South America: 55-11-3611-1514
Hong Kong: 852-2735-1628
Japan: 81-44-844-8013
UK: 44-141-810-8967

Product Dimensions (Continued)

1.0 mm, FPC Connector, ZIF Vertical, SMT

Part Number 440347
Lead Free 1734248

Part Number	Position	Dimension		
		A	B	C
440347-3	3	**2.00** .078	**8.60** .338	**4.40** .173
440347-4	4	**3.00** .118	**9.60** .377	**5.40** .212
440347-5	5	**4.00** .157	**10.60** .417	**6.40** .251
440347-6	6	**5.00** .197	**11.60** .456	**7.40** .291
440347-7	7	**6.00** .236	**12.60** .496	**8.40** .330
440347-8	8	**7.00** .276	**13.60** .535	**9.40** .370
440347-9	9	**8.00** .315	**14.60** .574	**10.40** .409
440347-0	10	**9.00** .354	**15.60** .614	**11.40** .448
1-440347-1	11	**10.00** .394	**16.60** .653	**12.40** .488
1-440347-2	12	**11.00** .433	**17.60** .692	**13.40** .527
1-440347-3	13	**12.00** .472	**18.60** .732	**14.40** .566
1-440347-4	14	**13.00** .512	**19.60** .771	**15.40** .606
1-440347-5	15	**14.00** .551	**20.60** .811	**16.40** .645
1-440347-6	16	**15.00** .591	**21.60** .850	**17.40** .685
1-440347-7	17	**16.00** .630	**22.60** .889	**18.40** .724
1-440347-8	18	**17.00** .669	**23.60** .929	**19.40** .763
1-440347-9	19	**18.00** .709	**24.60** .968	**20.40** .803
2-440347-0	20	**19.00** .748	**25.60** 1.007	**21.40** .842
2-440347-1	21	**20.00** .787	**26.60** 1.047	**22.40** .881

Part Number	Position	Dimension		
		A	B	C
2-440347-2	22	**21.00** .827	**27.60** 1.086	**23.40** .921
2-440347-3	23	**22.00** .866	**28.60** 1.125	**24.40** .960
2-440347-4	24	**23.00** .906	**29.60** 1.165	**25.40** 1.000
2-440347-5	25	**24.00** .945	**30.60** 1.204	**26.40** 1.039
2-440347-6	26	**25.00** .984	**31.60** 1.244	**27.40** 1.078
2-440347-7	27	**26.00** 1.024	**32.60** 1.283	**28.40** 1.118
2-440347-8	28	**27.00** 1.063	**33.60** 1.322	**29.40** 1.157
2-440347-9	29	**28.00** 1.102	**34.60** 1.362	**30.40** 1.196
3-440347-0	30	**29.00** 1.142	**35.60** 1.401	**31.40** 1.236
3-440347-1	31	**30.00** 1.181	**36.60** 1.440	**32.40** 1.275
3-440347-2	32	**31.00** 1.221	**37.60** 1.480	**33.40** 1.314
3-440347-3	33	**32.00** 1.259	**38.60** 1.519	**34.40** 1.354
3-440347-4	34	**33.00** 1.299	**39.60** 1.559	**35.40** 1.393
3-440347-5	35	**34.00** 1.338	**40.60** 1.598	**36.40** 1.433
3-440347-6	36	**35.00** 1.377	**41.60** 1.637	**37.40** 1.472
3-440347-7	37	**36.00** 1.417	**42.60** 1.677	**38.40** 1.511
3-440347-8	38	**37.00** 1.456	**43.60** 1.716	**39.40** 1.551
3-440347-9	39	**38.00** 1.496	**44.60** 1.755	**40.40** 1.590
4-440347-0	40	**39.00** 1.535	**45.60** 1.795	**41.40** 1.629

Catalog 1-1773440-6
Revised 05-06

www.tycoelectronics.com

Dimensions are in millimeters and inches unless otherwise specified. Values in brackets are standard equivalents.

Dimensions are shown for reference purposes only. Specifications subject to change.

USA: 1-800-522-6752
Canada: 1-905-470-4425
Mexico: 01-800-733-8926
C. America: 52-55-5-729-0425

South America: 55-11-3611-1514
Hong Kong: 852-2735-1628
Japan: 81-44-844-8013
UK: 44-141-810-8967

Product Dimensions (Continued)

1.0 mm, FPC Connector, Right Angle, SMT, Top Contact

Part Number **487951**
Lead Free **84953**

Material and Finish

Housing — Glass reinforced polyester (LCP), UL 94V-0, natural color
Actuator — Glass reinforced nylon (PPA), UL 94V-0, or glass reinforced PPS, UL 94V-0, black color
Solder Tabs — Phosphor bronze
Contact — Phosphor bronze

Technical Documents

Product Specification — 108-1393

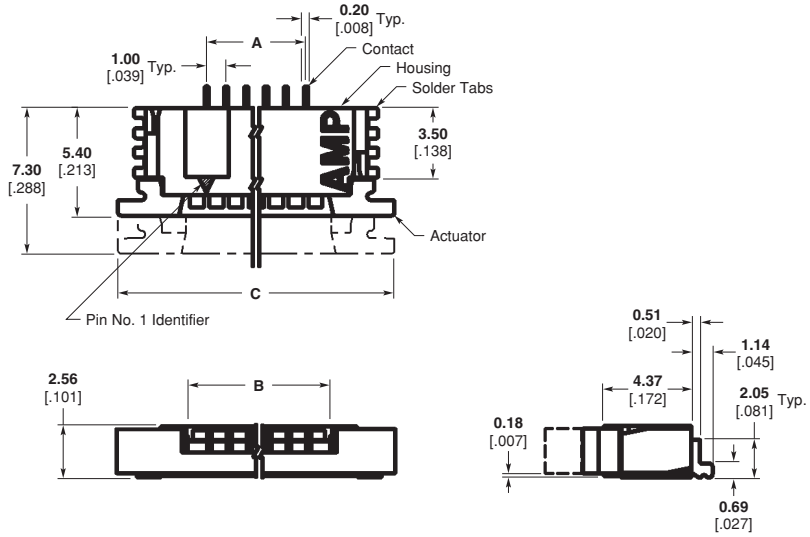

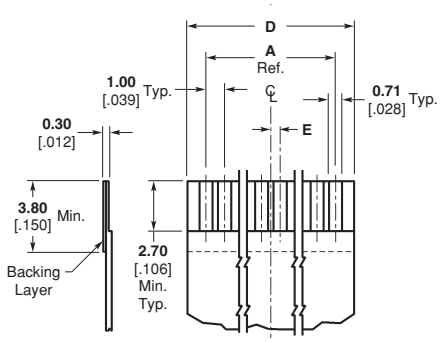

Recommended FPC Layout

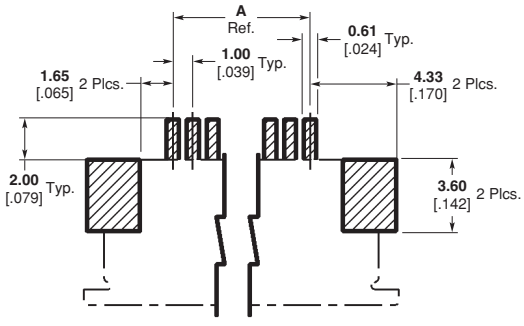

Recommended PCB Layout

Catalog 1-1773440-6
Revised 05-06

www.tycoelectronics.com

Dimensions are in millimeters and inches unless otherwise specified. Values in brackets are standard equivalents.

Dimensions are shown for reference purposes only. Specifications subject to change.

USA: 1-800-522-6752
Canada: 1-905-470-4425
Mexico: 01-800-733-8926
C. America: 52-55-5-729-0425

South America: 55-11-3611-1514
Hong Kong: 852-2735-1628
Japan: 81-44-844-8013
UK: 44-141-810-8967

Product Dimensions (Continued)

1.0 mm, FPC Connector, Right Angle, SMT, Top Contact

Part Number 487951
Lead Free 84953

Technical Documents
Product Specification — 108-1393

Part Number	Positions	Dimension				
		A	B	C	D	E
84953-4	4	**3.00** .118	**5.18** .204	**11.92** .469	**5.00** .197	**0.50** .019
84953-5	5	**4.00** .157	**6.18** .243	**12.92** .509	**6.00** .236	—
84953-6	6	**5.00** .197	**7.18** .283	**13.92** .548	**7.00** .276	**0.50** .019
84953-7	7	**6.00** .236	**8.18** .322	**14.92** .587	**8.00** .315	—
84953-8	8	**7.00** .276	**9.18** .361	**15.92** .627	**9.00** .354	**0.50** .019
84953-9	9	**8.00** .315	**10.18** .401	**16.92** .666	**10.00** .394	—
1-84953-0	10	**9.00** .354	**11.18** .440	**17.92** .705	**11.00** .433	**0.50** .019
1-84953-1	11	**10.00** .394	**12.18** .480	**18.92** .745	**12.00** .472	—
1-84953-2	12	**11.00** .433	**13.18** .519	**19.92** .784	**13.00** .512	**0.50** .019
1-84953-3	13	**12.00** .472	**14.18** .558	**20.92** .824	**14.00** .551	—
1-84953-4	14	**13.00** .512	**15.18** .598	**21.92** .863	**15.00** .591	**0.50** .019
1-84953-5	15	**14.00** .551	**16.18** .637	**22.92** .902	**16.00** .630	—
1-84953-6	16	**15.00** .591	**17.18** .676	**23.92** .942	**17.00** .669	**0.50** .019
1-84953-7	17	**16.00** .630	**18.18** .716	**24.92** .981	**18.00** .709	—
1-84953-8	18	**17.00** .669	**19.18** .755	**25.92** 1.020	**19.00** .748	**0.50** .019
1-84953-9	19	**18.00** .709	**20.18** .794	**26.92** 1.060	**20.00** .787	—
2-84953-0	20	**19.00** .748	**21.18** .834	**27.92** 1.099	**21.00** .827	**0.50** .019
2-84953-1	21	**20.00** .787	**22.18** .873	**28.92** 1.139	**22.00** .866	—
2-84953-2	22	**21.00** .827	**23.18** .913	**29.92** 1.179	**23.00** .906	**0.50** .019
2-84953-3	23	**22.00** .866	**24.18** .952	**30.92** 1.217	**24.00** .945	—
2-84953-4	24	**23.00** .906	**25.18** .991	**31.92** 1.257	**25.00** .984	**0.50** .019
2-84953-5	25	**24.00** .945	**26.18** 1.031	**32.92** 1.296	**26.00** 1.024	—
2-84953-6	26	**25.00** .984	**27.18** 1.070	**33.92** 1.335	**27.00** 1.063	**0.50** .019
2-84953-7	27	**26.00** 1.024	**28.18** 1.109	**34.92** 1.375	**28.00** 1.102	—
2-84953-8	28	**27.00** 1.063	**29.18** 1.149	**35.92** 1.414	**29.00** 1.142	**0.50** .019
2-84953-9	29	**28.00** 1.102	**30.18** 1.188	**36.92** 1.454	**30.00** 1.181	—
3-84953-0	30	**29.00** 1.142	**31.18** 1.228	**37.92** 1.492	**31.00** 1.221	**0.50** .019

Catalog 1-1773440-6
Revised 05-06

www.tycoelectronics.com

Dimensions are in millimeters and inches unless otherwise specified. Values in brackets are standard equivalents.

Dimensions are shown for reference purposes only. Specifications subject to change.

USA: 1-800-522-6752
Canada: 1-905-470-4425
Mexico: 01-800-733-8926
C. America: 52-55-5-729-0425

South America: 55-11-3611-1514
Hong Kong: 852-2735-1628
Japan: 81-44-844-8013
UK: 44-141-810-8967

Product Dimensions (Continued)

1.0 mm, FPC Connector, Right Angle, SMT, Bottom Contact

Part Number **487952**
Lead Free **84952**

Material and Finish

Housing — Glass reinforced polyester (LCP), UL 94V-0, natural color
Actuator — Glass reinforced nylon (PPA), UL 94V-0, or glass reinforced PPS, UL 94V-0, black color
Solder Tabs — Phosphor bronze
Contact — Phosphor bronze

Technical Documents

Product Specification — 108-1393

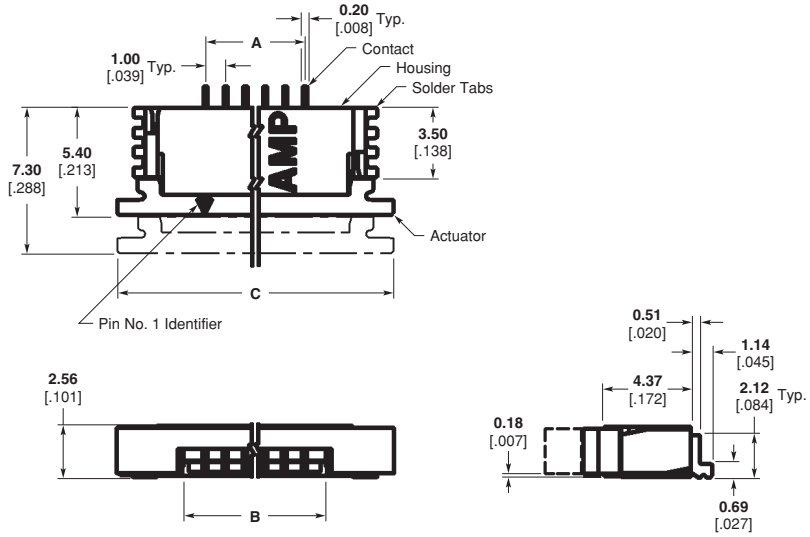

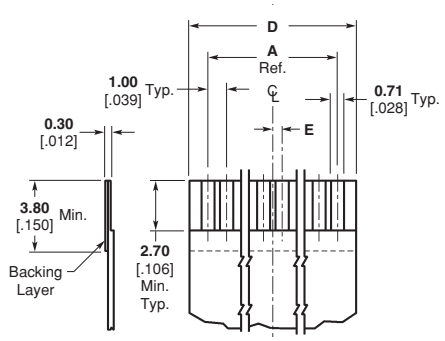

Recommended FPC Layout

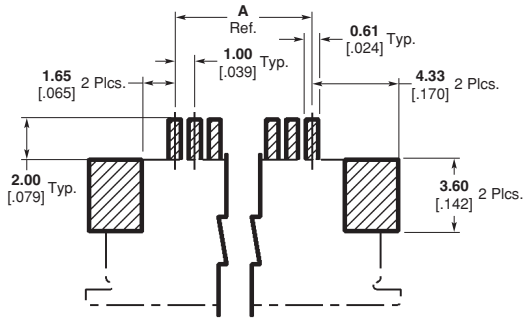

Recommended PCB Layout

Catalog 1-1773440-6
Revised 05-06

www.tycoelectronics.com

Dimensions are in millimeters and inches unless otherwise specified. Values in brackets are standard equivalents.

Dimensions are shown for reference purposes only. Specifications subject to change.

USA: 1-800-522-6752
Canada: 1-905-470-4425
Mexico: 01-800-733-8926
C. America: 52-55-5-729-0425

South America: 55-11-3611-1514
Hong Kong: 852-2735-1628
Japan: 81-44-844-8013
UK: 44-141-810-8967

Product Dimensions (Continued)

1.0 mm, FPC Connector, Right Angle, SMT, Bottom Contact

Part Number 487952
Lead Free 84952

Technical Documents
Product Specification — 108-1393

Part Number	Positions	Dimension				
		A	B	C	D	E
84952-4	4	**3.00** .118	**5.18** .204	**11.92** .469	**5.00** .197	**0.50** .019
84952-5	5	**4.00** .157	**6.18** .243	**12.92** .509	**6.00** .236	—
84952-6	6	**5.00** .197	**7.18** .283	**13.92** .548	**7.00** .276	**0.50** .019
84952-7	7	**6.00** .236	**8.18** .322	**14.92** .587	**8.00** .315	—
84952-8	8	**7.00** .276	**9.18** .361	**15.92** .627	**9.00** .354	**0.50** .019
84952-9	9	**8.00** .315	**10.18** .401	**16.92** .666	**10.00** .394	—
1-84952-0	10	**9.00** .354	**11.18** .440	**17.92** .705	**11.00** .433	**0.50** .019
1-84952-1	11	**10.00** .394	**12.18** .480	**18.92** .745	**12.00** .472	—
1-84952-2	12	**11.00** .433	**13.18** .519	**19.92** .784	**13.00** .512	**0.50** .019
1-84952-3	13	**12.00** .472	**14.18** .558	**20.92** .824	**14.00** .551	—
1-84952-4	14	**13.00** .512	**15.18** .598	**21.92** .863	**15.00** .591	**0.50** .019
1-84952-5	15	**14.00** .551	**16.18** .637	**22.92** .902	**16.00** .630	—
1-84952-6	16	**15.00** .591	**17.18** .676	**23.92** .942	**17.00** .669	**0.50** .019
1-84952-7	17	**16.00** .630	**18.18** .716	**24.92** .981	**18.00** .709	—
1-84952-8	18	**17.00** .669	**19.18** .755	**25.92** 1.020	**19.00** .748	**0.50** .019
1-84952-9	19	**18.00** .709	**20.18** .794	**26.92** 1.060	**20.00** .787	—
2-84952-0	20	**19.00** .748	**21.18** .834	**27.92** 1.099	**21.00** .827	**0.50** .019
2-84952-1	21	**20.00** .787	**22.18** .873	**28.92** 1.139	**22.00** .866	—
2-84952-2	22	**21.00** .827	**23.18** .913	**29.92** 1.179	**23.00** .906	**0.50** .019
2-84952-3	23	**22.00** .866	**24.18** .952	**30.92** 1.217	**24.00** .945	—
2-84952-4	24	**23.00** .906	**25.18** .991	**31.92** 1.257	**25.00** .984	**0.50** .019
2-84952-5	25	**24.00** .945	**26.18** 1.031	**32.92** 1.296	**26.00** 1.024	—
2-84952-6	26	**25.00** .984	**27.18** 1.070	**33.92** 1.335	**27.00** 1.063	**0.50** .019
2-84952-7	27	**26.00** 1.024	**28.18** 1.109	**34.92** 1.375	**28.00** 1.102	—
2-84952-8	28	**27.00** 1.063	**29.18** 1.149	**35.92** 1.414	**29.00** 1.142	**0.50** .019
2-84952-9	29	**28.00** 1.102	**30.18** 1.188	**36.92** 1.454	**30.00** 1.181	—
3-84952-0	30	**29.00** 1.142	**31.18** 1.228	**37.92** 1.492	**31.00** 1.221	**0.50** .019

Catalog 1-1773440-6
Revised 05-06

www.tycoelectronics.com

Dimensions are in millimeters and inches unless otherwise specified. Values in brackets are standard equivalents.

Dimensions are shown for reference purposes only. Specifications subject to change.

USA: 1-800-522-6752
Canada: 1-905-470-4425
Mexico: 01-800-733-8926
C. America: 52-55-5-729-0425

South America: 55-11-3611-1514
Hong Kong: 852-2735-1628
Japan: 81-44-844-8013
UK: 44-141-810-8967

Product Dimensions (Continued)

1.0 mm, FFC Connector, SMT, Vertical, (Non-ZIF)

Lead Free **84982**

Material and Finish

Housing — Glass filled high temperature nylon, beige color

Contact — Phosphor bronze

Technical Documents

Product Specification — 108-51054

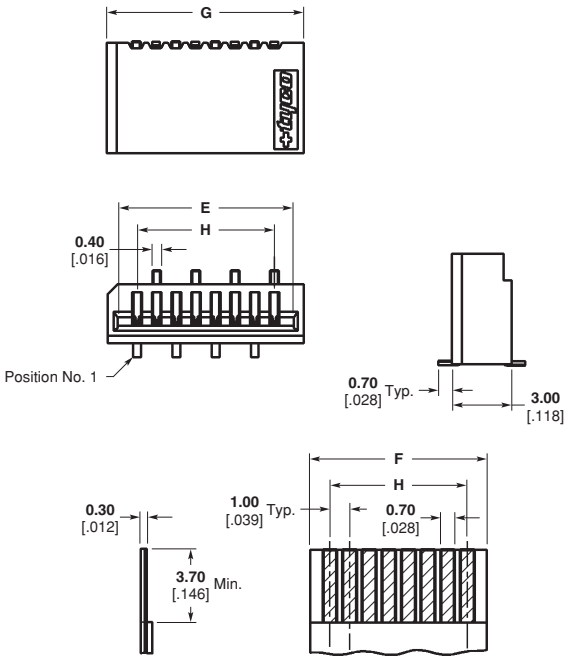

Recommended FFC/FPC Layout

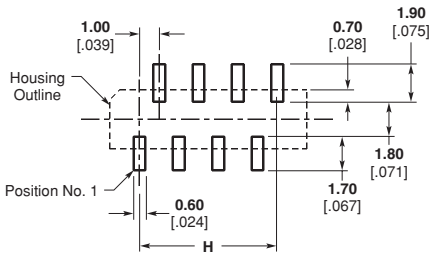

Recommended PCB Layout
For Even Position Connectors

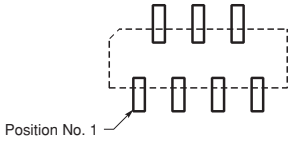

Recommended PCB Layout
For Odd Position Connectors

Catalog 1-1773440-6
Revised 05-06

www.tycoelectronics.com

Dimensions are in millimeters and inches unless otherwise specified. Values in brackets are standard equivalents.

Dimensions are shown for reference purposes only. Specifications subject to change.

USA: 1-800-522-6752
Canada: 1-905-470-4425
Mexico: 01-800-733-8926
C. America: 52-55-5-729-0425

South America: 55-11-3611-1514
Hong Kong: 852-2735-1628
Japan: 81-44-844-8013
UK: 44-141-810-8967

1.0 mm, FFC Connector, SMT, Vertical, (Non-ZIF)

Lead Free 84982

Technical Documents
Product Specification — 108-51054

Product Dimensions (Continued)

Part Number	No. of Contacts	Dimension			
		E	F	G	H
84982-4	4	**5.00** .197	**5.00** .197	**6.00** .236	**3.00** .118
84982-5	5	**6.00** .236	**6.00** .236	**7.00** .276	**4.00** .157
84982-6	6	**7.00** .276	**7.00** .276	**8.00** .315	**5.00** .197
84982-7	7	**8.00** .315	**8.00** .315	**9.00** .354	**6.00** .236
84982-8	8	**9.00** .354	**9.00** .354	**10.00** .394	**7.00** .276
84982-9	9	**10.00** .394	**10.00** .394	**11.00** .433	**8.00** .315
1-84982-0	10	**11.00** .433	**11.00** .433	**12.00** .472	**9.00** .354
1-84982-1	11	**12.00** .472	**12.00** .472	**13.00** .512	**10.00** .394
1-84982-2	12	**13.00** .512	**13.00** .512	**14.00** .551	**11.00** .433
1-84982-3	13	**14.00** .551	**14.00** .551	**15.00** .591	**12.00** .472
1-84982-4	14	**15.00** .591	**15.00** .591	**16.00** .630	**13.00** .512
1-84982-5	15	**16.00** .630	**16.00** .630	**17.00** .669	**14.00** .551
1-84982-6	16	**17.00** .669	**17.00** .669	**18.00** .709	**15.00** .591
1-84982-7	17	**18.00** .709	**18.00** .709	**19.00** .748	**16.00** .630
1-84982-8	18	**19.00** .748	**19.00** .748	**20.00** .787	**17.00** .669
1-84982-9	19	**20.00** .787	**20.00** .787	**21.00** .827	**18.00** .709
2-84982-0	20	**21.00** .827	**21.00** .827	**22.00** .866	**19.00** .748
2-84982-1	21	**22.00** .866	**22.00** .866	**23.00** .906	**20.00** .787
2-84982-2	22	**23.00** .906	**23.00** .906	**24.00** .945	**21.00** .827
2-84982-3	23	**24.00** .945	**24.00** .945	**25.00** .984	**22.00** .866
2-84982-4	24	**25.00** .984	**25.00** .984	**26.00** 1.024	**23.00** .906
2-84982-5	25	**26.00** 1.024	**26.00** 1.024	**27.00** 1.063	**24.00** .945
2-84982-6	26	**27.00** 1.063	**27.00** 1.063	**28.00** 1.102	**25.00** .984
2-84982-7	27	**28.00** 1.102	**28.00** 1.102	**29.00** 1.142	**26.00** 1.024
2-84982-8	28	**29.00** 1.142	**29.00** 1.142	**30.00** 1.181	**27.00** 1.063
2-84982-9	29	**30.00** 1.181	**30.00** 1.181	**31.00** 1.221	**28.00** 1.102
3-84982-0	30	**31.00** 1.221	**31.00** 1.221	**32.00** 1.259	**29.00** 1.142
3-84982-1	31	**32.00** 1.259	**32.00** 1.259	**33.00** 1.299	**30.00** 1.181
3-84982-2	32	**33.00** 1.299	**33.00** 1.299	**34.00** 1.338	**31.00** 1.221
3-84982-3	33	**34.00** 1.338	**34.00** 1.338	**35.00** 1.377	**32.00** 1.259
3-84982-4	34	**35.00** 1.377	**35.00** 1.377	**36.00** 1.417	**33.00** 1.299
3-84982-5	35	**36.00** 1.417	**36.00** 1.417	**37.00** 1.456	**34.00** 1.338
3-84982-6	36	**37.00** 1.456	**37.00** 1.456	**38.00** 1.496	**35.00** 1.377
3-84982-7	37	**38.00** 1.496	**38.00** 1.496	**39.00** 1.535	**36.00** 1.417
3-84982-8	38	**39.00** 1.535	**39.00** 1.535	**40.00** 1.574	**37.00** 1.456
3-84982-9	39	**40.00** 1.574	**40.00** 1.574	**41.00** 1.614	**38.00** 1.496
4-84982-0	40	**41.00** 1.614	**41.00** 1.614	**42.00** 1.653	**39.00** 1.535

Catalog 1-1773440-6
Revised 05-06

www.tycoelectronics.com

Dimensions are in millimeters and inches unless otherwise specified. Values in brackets are standard equivalents.

Dimensions are shown for reference purposes only. Specifications subject to change.

USA: 1-800-522-6752
Canada: 1-905-470-4425
Mexico: 01-800-733-8926
C. America: 52-55-5-729-0425

South America: 55-11-3611-1514
Hong Kong: 852-2735-1628
Japan: 81-44-844-8013
UK: 44-141-810-8967

Product Dimensions (Continued)

1.0 mm, FFC Connector, SMT, Right Angle, Non-ZIF

Lead Free 84981

Material and Finish

Housing — Glass filled high temperature nylon, beige color

Contact — Phosphor bronze

Technical Documents

Product Specification — 108-51054

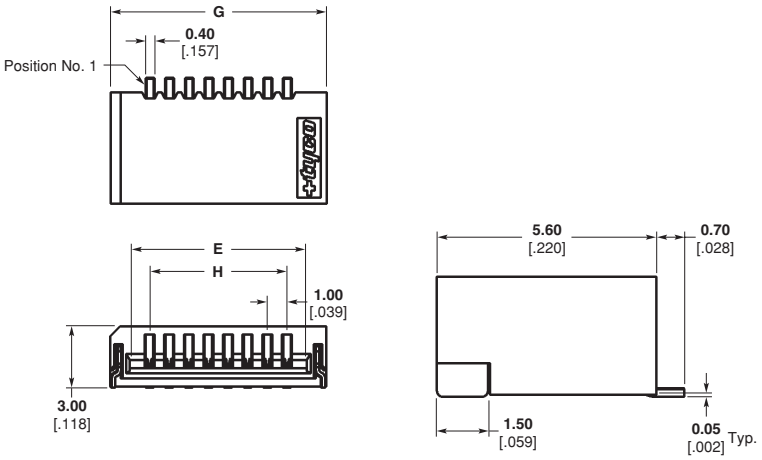

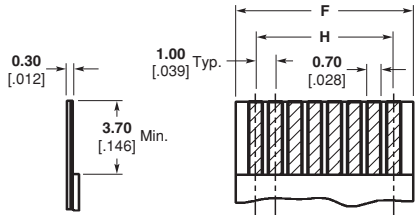

Recommended FFC/FPC Layout

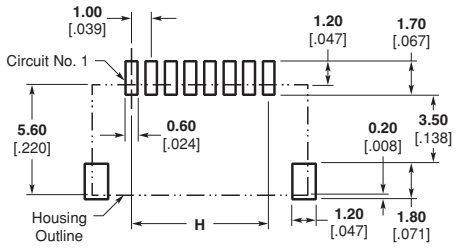

Recommended PCB Layout

Catalog 1-1773440-6
Revised 05-06

www.tycoelectronics.com

Dimensions are in millimeters and inches unless otherwise specified. Values in brackets are standard equivalents.

Dimensions are shown for reference purposes only. Specifications subject to change.

USA: 1-800-522-6752
Canada: 1-905-470-4425
Mexico: 01-800-733-8926
C. America: 52-55-5-729-0425

South America: 55-11-3611-1514
Hong Kong: 852-2735-1628
Japan: 81-44-844-8013
UK: 44-141-810-8967

1.0 mm, FFC Connector, SMT, Right Angle, Non-ZIF

Lead Free 84981

Technical Documents

Product Specification — 108-51054

Product Dimensions (Continued)

Part Number	No. of Contacts	Dimension			
		E	F	G	H
84981-4	4	**5.00** .197	**5.00** .197	**7.00** .276	**3.00** .118
84981-5	5	**6.00** .236	**6.00** .236	**8.00** .315	**4.00** .157
84981-6	6	**7.00** .276	**7.00** .276	**9.00** .354	**5.00** .197
84981-7	7	**8.00** .315	**8.00** .315	**10.00** .394	**6.00** .236
84981-8	8	**9.00** .354	**9.00** .354	**11.00** .433	**7.00** .276
84981-9	9	**10.00** .394	**10.00** .394	**12.00** .472	**8.00** .315
1-84981-0	10	**11.00** .433	**11.00** .433	**13.00** .512	**9.00** .354
1-84981-1	11	**12.00** .472	**12.00** .472	**14.00** .551	**10.00** .394
1-84981-2	12	**13.00** .512	**13.00** .512	**15.00** .591	**11.00** .433
1-84981-3	13	**14.00** .551	**14.00** .551	**16.00** .630	**12.00** .472
1-84981-4	14	**15.00** .591	**15.00** .591	**17.00** .669	**13.00** .512
1-84981-5	15	**16.00** .630	**16.00** .630	**18.00** .709	**14.00** .551
1-84981-6	16	**17.00** .669	**17.00** .669	**19.00** .748	**15.00** .591
1-84981-7	17	**18.00** .709	**18.00** .709	**20.00** .787	**16.00** .630
1-84981-8	18	**19.00** .748	**19.00** .748	**21.00** .827	**17.00** .669
1-84981-9	19	**20.00** .787	**20.00** .787	**22.00** .866	**18.00** .709
2-84981-0	20	**21.00** .827	**21.00** .827	**23.00** .906	**19.00** .748
2-84981-1	21	**22.00** .866	**22.00** .866	**24.00** .945	**20.00** .787
2-84981-2	22	**23.00** .906	**23.00** .906	**25.00** .984	**21.00** .827
2-84981-3	23	**24.00** .945	**24.00** .945	**26.00** 1.024	**22.00** .866
2-84981-4	24	**25.00** .984	**25.00** .984	**27.00** 1.063	**23.00** .906
2-84981-5	25	**26.00** 1.024	**26.00** 1.024	**28.00** 1.102	**24.00** .945
2-84981-6	26	**27.00** 1.063	**27.00** 1.063	**29.00** 1.142	**25.00** .984
2-84981-7	27	**28.00** 1.102	**28.00** 1.102	**30.00** 1.181	**26.00** 1.024
2-84981-8	28	**29.00** 1.142	**29.00** 1.142	**31.00** 1.221	**27.00** 1.063
2-84981-9	29	**30.00** 1.181	**30.00** 1.181	**32.00** 1.259	**28.00** 1.102
3-84981-0	30	**31.00** 1.221	**31.00** 1.221	**33.00** 1.299	**29.00** 1.142
3-84981-1	31	**32.00** 1.259	**32.00** 1.259	**34.00** 1.338	**30.00** 1.181
3-84981-2	32	**33.00** 1.299	**33.00** 1.299	**35.00** 1.377	**31.00** 1.221
3-84981-3	33	**34.00** 1.338	**34.00** 1.338	**36.00** 1.417	**32.00** 1.259
3-84981-4	34	**35.00** 1.377	**35.00** 1.377	**37.00** 1.456	**33.00** 1.299
3-84981-5	35	**36.00** 1.417	**36.00** 1.417	**38.00** 1.496	**34.00** 1.338
3-84981-6	36	**37.00** 1.456	**37.00** 1.456	**39.00** 1.535	**35.00** 1.377
3-84981-7	37	**38.00** 1.496	**38.00** 1.496	**40.00** 1.574	**36.00** 1.417
3-84981-8	38	**39.00** 1.535	**39.00** 1.535	**41.00** 1.614	**37.00** 1.456
3-84981-9	39	**40.00** 1.574	**40.00** 1.574	**42.00** 1.653	**38.00** 1.496
4-84981-0	40	**41.00** 1.614	**41.00** 1.614	**43.00** 1.692	**39.00** 1.535

Catalog 1-1773440-6
Revised 05-06

www.tycoelectronics.com

Dimensions are in millimeters and inches unless otherwise specified. Values in brackets are standard equivalents.

Dimensions are shown for reference purposes only. Specifications subject to change.

USA: 1-800-522-6752
Canada: 1-905-470-4425
Mexico: 01-800-733-8926
C. America: 52-55-5-729-0425

South America: 55-11-3611-1514
Hong Kong: 852-2735-1628
Japan: 81-44-844-8013
UK: 44-141-810-8967

Product Dimensions (Continued)

1.0 mm, FPC Connector, Non-ZIF, SMT, Right Angle, Bottom Contact

Part Number 1470852
Lead Free 1734798

Material and Finish

Housing — Thermoplastic, UL 94V-0, black color

Tabs — Brass

Contact — Phosphor bronze

Technical Documents

Product Specification — 108-57354

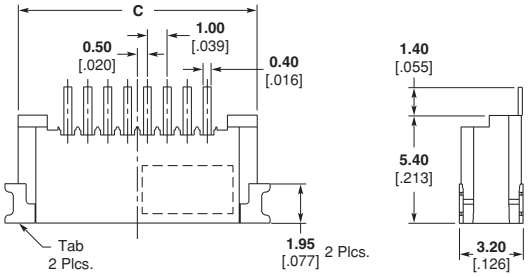

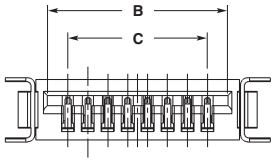

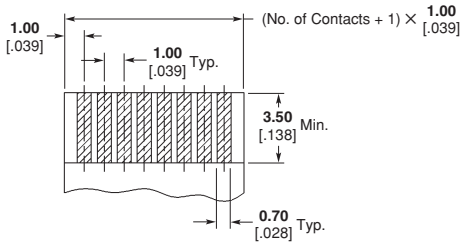

Recommended FPC Layout

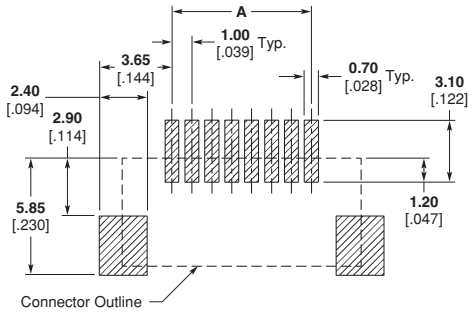

Recommended PCB Layout

Catalog 1-1773440-6
Revised 05-06

www.tycoelectronics.com

Dimensions are in millimeters and inches unless otherwise specified. Values in brackets are standard equivalents.

Dimensions are shown for reference purposes only. Specifications subject to change.

USA: 1-800-522-6752
Canada: 1-905-470-4425
Mexico: 01-800-733-8926
C. America: 52-55-5-729-0425

South America: 55-11-3611-1514
Hong Kong: 852-2735-1628
Japan: 81-44-844-8013
UK: 44-141-810-8967

Product Dimensions (Continued)

1.0 mm, FPC Connector, Non-ZIF, SMT, Right Angle, Bottom Contact

Part Number 1470852
Lead Free 1734798

Technical Documents
Product Specification — 108-57354

Part Number	Position	Dimension		
		A	B	C
1470852-4	4	**3.00** .118	**5.05** .198	**7.00** .276
1470852-5	5	**4.00** .157	**6.05** .238	**8.00** .315
1470852-6	6	**5.00** .197	**7.05** .277	**9.00** .354
1470852-7	7	**6.00** .236	**8.05** .316	**10.00** .394
1470852-8	8	**7.00** .276	**9.05** .356	**11.00** .433
1470852-9	9	**8.00** .315	**10.05** .395	**12.00** .472
1-1470852-0	10	**9.00** .354	**11.05** .435	**13.00** .512
1-1470852-1	11	**10.00** .394	**12.05** .474	**14.00** .551
1-1470852-2	12	**11.00** .433	**13.05** .513	**15.00** .591
1-1470852-3	13	**12.00** .472	**14.05** .553	**16.00** .630
1-1470852-4	14	**13.00** .512	**15.05** .592	**17.00** .669
1-1470852-5	15	**14.00** .551	**16.05** .631	**18.00** .709
1-1470852-6	16	**15.00** .591	**17.05** .671	**19.00** .748
1-1470852-7	17	**16.00** .630	**18.05** .710	**20.00** .787
1-1470852-8	18	**17.00** .669	**19.05** .750	**21.00** .827
1-1470852-9	19	**18.00** .709	**20.05** .788	**22.00** .866
2-1470852-0	20	**19.00** .748	**21.05** .828	**23.00** .906
2-1470852-1	21	**20.00** .787	**22.05** .857	**24.00** .945
2-1470852-2	22	**21.00** .827	**23.05** .907	**25.00** .984
2-1470852-3	23	**22.00** .866	**24.05** .946	**26.00** 1.024
2-1470852-4	24	**23.00** .906	**25.05** .986	**27.00** 1.063
2-1470852-5	25	**24.00** .945	**26.05** 1.025	**28.00** 1.102
2-1470852-6	26	**25.00** .984	**27.05** 1.064	**29.00** 1.142
2-1470852-7	27	**26.00** 1.024	**28.05** 1.104	**30.00** 1.181
2-1470852-8	28	**27.00** 1.063	**29.05** 1.143	**31.00** 1.220
2-1470852-9	29	**28.00** 1.102	**30.05** 1.183	**32.00** 1.259
3-1470852-0	30	**29.00** 1.142	**31.05** 1.222	**33.00** 1.299

Catalog 1-1773440-6
Revised 05-06

www.tycoelectronics.com

Dimensions are in millimeters and inches unless otherwise specified. Values in brackets are standard equivalents.

Dimensions are shown for reference purposes only. Specifications subject to change.

USA: 1-800-522-6752
Canada: 1-905-470-4425
Mexico: 01-800-733-8926
C. America: 52-55-5-729-0425

South America: 55-11-3611-1514
Hong Kong: 852-2735-1628
Japan: 81-44-844-8013
UK: 44-141-810-8967

Product Dimensions (Continued)

1.0 mm, FFC Connector, Through-Hole, Vertical

Lead Free 84984

Material and Finish

Housing — Glass filled PBT, white color

Contact — Phosphor bronze

Technical Documents

Product Specification — 108-51058

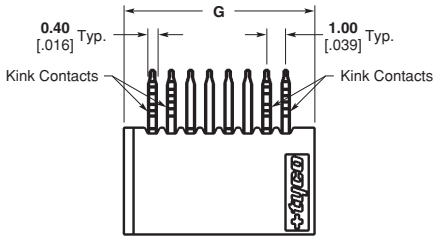

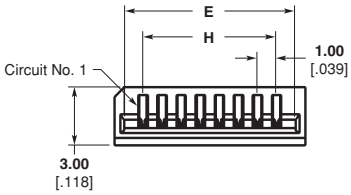

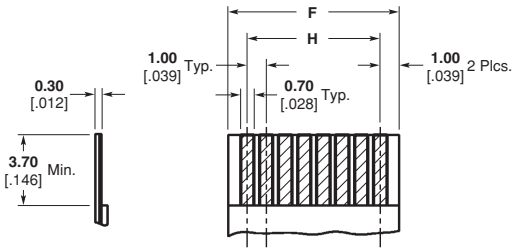

Recommended FPC Layout

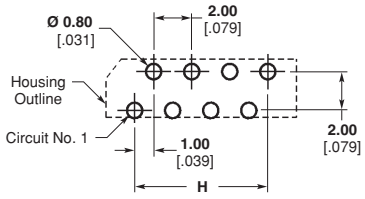

Recommended PCB Layout
1.60 [.063] Thickness
(For Even Position Connectors)

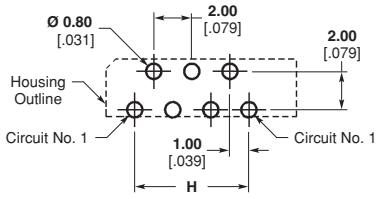

Recommended PCB Layout
1.60 [.063] Thickness
(For Odd Position Connectors)

Catalog 1-1773440-6
Revised 05-06

www.tycoelectronics.com

Dimensions are in millimeters and inches unless otherwise specified. Values in brackets are standard equivalents.

Dimensions are shown for reference purposes only. Specifications subject to change.

USA: 1-800-522-6752
Canada: 1-905-470-4425
Mexico: 01-800-733-8926
C. America: 52-55-5-729-0425

South America: 55-11-3611-1514
Hong Kong: 852-2735-1628
Japan: 81-44-844-8013
UK: 44-141-810-8967

1.0 mm, FFC Connector, Through-Hole, Vertical

Lead Free 84984

Technical Documents
Product Specification — 108-51058

Product Dimensions (Continued)

Part Number	No. of Contacts	Dimension			
		E	F	G	H
84984-4	4	**5.00** .197	**5.00** .197	**6.00** .236	**3.00** .118
84984-5	5	**6.00** .236	**6.00** .236	**7.00** .276	**4.00** .157
84984-6	6	**7.00** .276	**7.00** .276	**8.00** .315	**5.00** .197
84984-7	7	**8.00** .315	**8.00** .315	**9.00** .354	**6.00** .236
84984-8	8	**9.00** .354	**9.00** .354	**10.00** .394	**7.00** .276
84984-9	9	**10.00** .394	**10.00** .394	**11.00** .433	**8.00** .315
1-84984-0	10	**11.00** .433	**11.00** .433	**12.00** .472	**9.00** .354
1-84984-1	11	**12.00** .472	**12.00** .472	**13.00** .512	**10.00** .394
1-84984-2	12	**13.00** .512	**13.00** .512	**14.00** .551	**11.00** .433
1-84984-3	13	**14.00** .551	**14.00** .551	**15.00** .591	**12.00** .472
1-84984-4	14	**15.00** .591	**15.00** .591	**16.00** .630	**13.00** .512
1-84984-5	15	**16.00** .630	**16.00** .630	**17.00** .669	**14.00** .551
1-84984-6	16	**17.00** .669	**17.00** .669	**18.00** .709	**15.00** .591
1-84984-7	17	**18.00** .709	**18.00** .709	**19.00** .748	**16.00** .630
1-84984-8	18	**19.00** .748	**19.00** .748	**20.00** .787	**17.00** .669
1-84984-9	19	**20.00** .787	**20.00** .787	**21.00** .827	**18.00** .709
2-84984-0	20	**21.00** .827	**21.00** .827	**22.00** .866	**19.00** .748
2-84984-1	21	**22.00** .866	**22.00** .866	**23.00** .906	**20.00** .787
2-84984-2	22	**23.00** .906	**23.00** .906	**24.00** .945	**21.00** .827
2-84984-3	23	**24.00** .945	**24.00** .945	**25.00** .984	**22.00** .866
2-84984-4	24	**25.00** .984	**25.00** .984	**26.00** 1.024	**23.00** .906
2-84984-5	25	**26.00** 1.024	**26.00** 1.024	**27.00** 1.063	**24.00** .945
2-84984-6	26	**27.00** 1.063	**27.00** 1.063	**28.00** 1.102	**25.00** .984
2-84984-7	27	**28.00** 1.102	**28.00** 1.102	**29.00** 1.142	**26.00** 1.024
2-84984-8	28	**29.00** 1.142	**29.00** 1.142	**30.00** 1.181	**27.00** 1.063
2-84984-9	29	**30.00** 1.181	**30.00** 1.181	**31.00** 1.221	**28.00** 1.102
3-84984-0	30	**31.00** 1.221	**31.00** 1.221	**32.00** 1.259	**29.00** 1.142
3-84984-1	31	**32.00** 1.259	**32.00** 1.259	**33.00** 1.299	**30.00** 1.181
3-84984-2	32	**33.00** 1.299	**33.00** 1.299	**34.00** 1.338	**31.00** 1.221
3-84984-3	33	**34.00** 1.338	**34.00** 1.338	**35.00** 1.377	**32.00** 1.259
3-84984-4	34	**35.00** 1.377	**35.00** 1.377	**36.00** 1.417	**33.00** 1.299
3-84984-5	35	**36.00** 1.417	**36.00** 1.417	**37.00** 1.456	**34.00** 1.338
3-84984-6	36	**37.00** 1.456	**37.00** 1.456	**38.00** 1.496	**35.00** 1.377
3-84984-7	37	**38.00** 1.496	**38.00** 1.496	**39.00** 1.535	**36.00** 1.417
3-84984-8	38	**39.00** 1.535	**39.00** 1.535	**40.00** 1.574	**37.00** 1.456
3-84984-9	39	**40.00** 1.574	**40.00** 1.574	**41.00** 1.614	**38.00** 1.496
4-84984-0	40	**41.00** 1.614	**41.00** 1.614	**42.00** 1.653	**39.00** 1.535

Catalog 1-1773440-6
Revised 05-06

www.tycoelectronics.com

Dimensions are in millimeters and inches unless otherwise specified. Values in brackets are standard equivalents.

Dimensions are shown for reference purposes only. Specifications subject to change.

USA: 1-800-522-6752
Canada: 1-905-470-4425
Mexico: 01-800-733-8926
C. America: 52-55-5-729-0425

South America: 55-11-3611-1514
Hong Kong: 852-2735-1628
Japan: 81-44-844-8013
UK: 44-141-810-8967

Product Dimensions (Continued)

1.0 mm, FFC Connector, Through-Hole, Right Angle

Lead Free 84983

Material and Finish

Housing — Glass filled PBT, white color

Contact — Phosphor bronze

Technical Documents

Product Specification — 108-51058

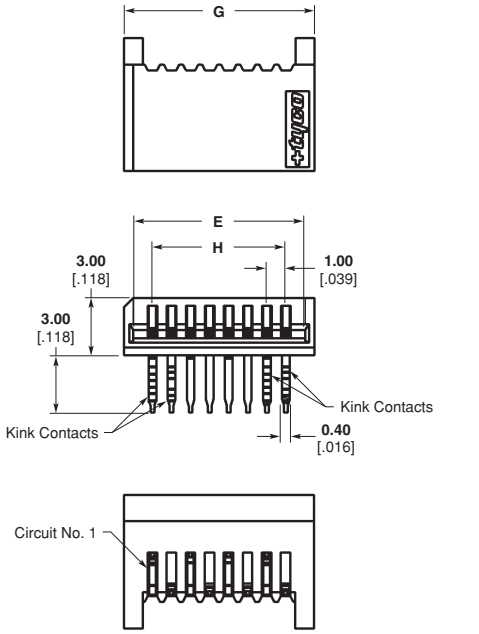

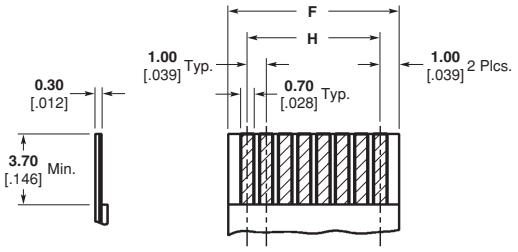

Recommended FPC Layout

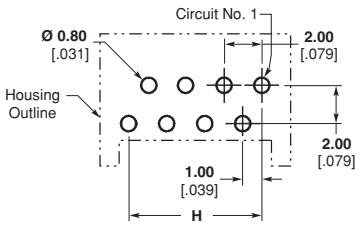

Recommended PCB Layout
1.60 [.063] Thickness
(For Even Position Connectors)

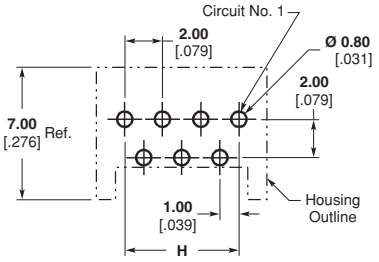

Recommended PCB Layout
1.60 [.063] Thickness
(For Odd Position Connectors)

Product Dimensions (Continued)

1.0 mm, FFC Connector, Through-Hole, Right Angle, Top Contack

Lead Free 84983

Technical Documents

Product Specification — 108-51058

Part Number	No. of Contacts	Dimension			
		E	F	G	H
84983-4	4	**5.00** .197	**5.00** .197	**6.00** .236	**3.00** .118
84983-5	5	**6.00** .236	**6.00** .236	**7.00** .276	**4.00** .157
84983-6	6	**7.00** .276	**7.00** .276	**8.00** .315	**5.00** .197
84983-7	7	**8.00** .315	**8.00** .315	**9.00** .354	**6.00** .236
84983-8	8	**9.00** .354	**9.00** .354	**10.00** .394	**7.00** .276
84983-9	9	**10.00** .394	**10.00** .394	**11.00** .433	**8.00** .315
1-84983-0	10	**11.00** .433	**11.00** .433	**12.00** .472	**9.00** .354
1-84983-1	11	**12.00** .472	**12.00** .472	**13.00** .512	**10.00** .394
1-84983-2	12	**13.00** .512	**13.00** .512	**14.00** .551	**11.00** .433
1-84983-3	13	**14.00** .551	**14.00** .551	**15.00** .591	**12.00** .472
1-84983-4	14	**15.00** .591	**15.00** .591	**16.00** .630	**13.00** .512
1-84983-5	15	**16.00** .630	**16.00** .630	**17.00** .669	**14.00** .551
1-84983-6	16	**17.00** .669	**17.00** .669	**18.00** .709	**15.00** .591
1-84983-7	17	**18.00** .709	**18.00** .709	**19.00** .748	**16.00** .630
1-84983-8	18	**19.00** .748	**19.00** .748	**20.00** .787	**17.00** .669
1-84983-9	19	**20.00** .787	**20.00** .787	**21.00** .827	**18.00** .709
2-84983-0	20	**21.00** .827	**21.00** .827	**22.00** .866	**19.00** .748
2-84983-1	21	**22.00** .866	**22.00** .866	**23.00** .906	**20.00** .787
2-84983-2	22	**23.00** .906	**23.00** .906	**24.00** .945	**21.00** .827
2-84983-3	23	**24.00** .945	**24.00** .945	**25.00** .984	**22.00** .866
2-84983-4	24	**25.00** .984	**25.00** .984	**26.00** 1.024	**23.00** .906
2-84983-5	25	**26.00** 1.024	**26.00** 1.024	**27.00** 1.063	**24.00** .945
2-84983-6	26	**27.00** 1.063	**27.00** 1.063	**28.00** 1.102	**25.00** .984
2-84983-7	27	**28.00** 1.102	**28.00** 1.102	**29.00** 1.142	**26.00** 1.024
2-84983-8	28	**29.00** 1.142	**29.00** 1.142	**30.00** 1.181	**27.00** 1.063
2-84983-9	29	**30.00** 1.181	**30.00** 1.181	**31.00** 1.221	**28.00** 1.102
3-84983-0	30	**31.00** 1.221	**31.00** 1.221	**32.00** 1.259	**29.00** 1.142
3-84983-1	31	**32.00** 1.259	**32.00** 1.259	**33.00** 1.299	**30.00** 1.181
3-84983-2	32	**33.00** 1.299	**33.00** 1.299	**34.00** 1.338	**31.00** 1.221
3-84983-3	33	**34.00** 1.338	**34.00** 1.338	**35.00** 1.377	**32.00** 1.259
3-84983-4	34	**35.00** 1.377	**35.00** 1.377	**36.00** 1.417	**33.00** 1.299
3-84983-5	35	**36.00** 1.417	**36.00** 1.417	**37.00** 1.456	**34.00** 1.338
3-84983-6	36	**37.00** 1.456	**37.00** 1.456	**38.00** 1.496	**35.00** 1.377
3-84983-7	37	**38.00** 1.496	**38.00** 1.496	**39.00** 1.535	**36.00** 1.417
3-84983-8	38	**39.00** 1.535	**39.00** 1.535	**40.00** 1.574	**37.00** 1.456
3-84983-9	39	**40.00** 1.574	**40.00** 1.574	**41.00** 1.614	**38.00** 1.496
4-84983-0	40	**41.00** 1.614	**41.00** 1.614	**42.00** 1.653	**39.00** 1.535

Catalog 1-1773440-6
Revised 05-06

www.tycoelectronics.com

Dimensions are in millimeters and inches unless otherwise specified. Values in brackets are standard equivalents.

Dimensions are shown for reference purposes only. Specifications subject to change.

USA: 1-800-522-6752
Canada: 1-905-470-4425
Mexico: 01-800-733-8926
C. America: 52-55-5-729-0425

South America: 55-11-3611-1514
Hong Kong: 852-2735-1628
Japan: 81-44-844-8013
UK: 44-141-810-8967

Product Dimensions (Continued)

1.0 mm, FPC Connector, Non-ZIF, Right-Angle, Bottom Contact, Type B

Part Number 1470790
Lead Free 1734779

Material and Finish

Housing — Thermoplastic, UL 94V-0, black color

Contacts — Phosphor bronze

Technical Documents

Product Specification — 108-57354

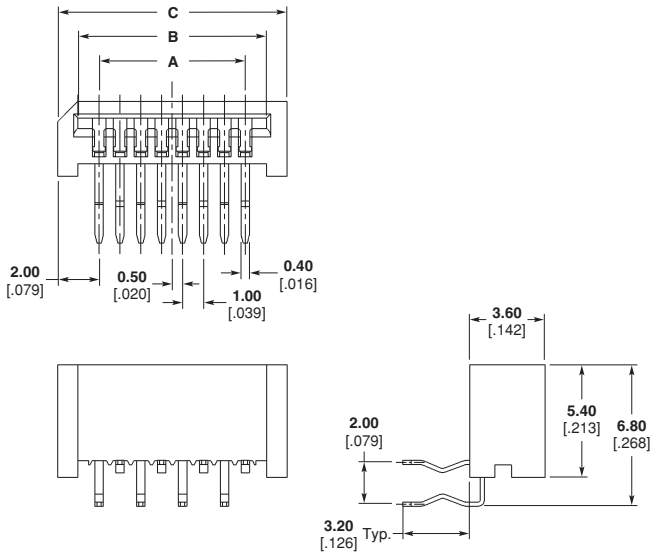

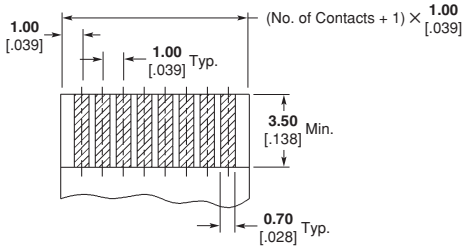

Recommended FPC Layout

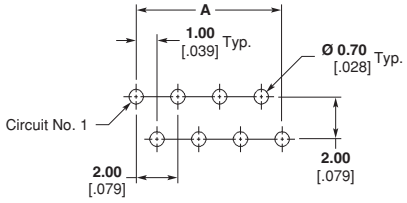

Recommended PCB Layout

Catalog 1-1773440-6
Revised 05-06

www.tycoelectronics.com

Dimensions are in millimeters and inches unless otherwise specified. Values in brackets are standard equivalents.

Dimensions are shown for reference purposes only. Specifications subject to change.

USA: 1-800-522-6752
Canada: 1-905-470-4425
Mexico: 01-800-733-8926
C. America: 52-55-5-729-0425

South America: 55-11-3611-1514
Hong Kong: 852-2735-1628
Japan: 81-44-844-8013
UK: 44-141-810-8967

Product Dimensions (Continued)

1.0 mm, FPC Connector, Non-ZIF, Right Angle, Bottom Contact, Type B

Part Number 1470790
Lead Free 1734779

Technical Documents
Product Specification — 108-57354

Part Number	No. of Contacts	Dimension		
		A	B	C
1470790-4	4	**3.00** .118	**5.05** .198	**7.00** .276
1470790-5	5	**4.00** .157	**6.05** .238	**8.00** .315
1470790-6	6	**5.00** .197	**7.05** .277	**9.00** .354
1470790-7	7	**6.00** .236	**8.05** .316	**10.00** .394
1470790-8	8	**7.00** .276	**9.05** .356	**11.00** .433
1470790-9	9	**8.00** .315	**10.05** .395	**12.00** .472
1-1470790-0	10	**9.00** .354	**11.05** .435	**13.00** .512
1-1470790-1	11	**10.00** .394	**12.05** .474	**14.00** .551
1-1470790-2	12	**11.00** .433	**13.05** .513	**15.00** .591
1-1470790-3	13	**12.00** .472	**14.05** .553	**16.00** .630
1-1470790-4	14	**13.00** .512	**15.05** .592	**17.00** .669
1-1470790-5	15	**14.00** .551	**16.05** .631	**18.00** .709
1-1470790-6	16	**15.00** .591	**17.05** .671	**19.00** .748
1-1470790-7	17	**16.00** .630	**18.05** .710	**20.00** .787
1-1470790-8	18	**17.00** .669	**19.05** .750	**21.00** .827
1-1470790-9	19	**18.00** .709	**20.05** .788	**22.00** .866
2-1470790-0	20	**19.00** .748	**21.05** .828	**23.00** .906
2-1470790-1	21	**20.00** .787	**22.05** .857	**24.00** .945
2-1470790-2	22	**21.00** .827	**23.05** .907	**25.00** .984
2-1470790-3	23	**22.00** .866	**24.05** .946	**26.00** 1.024
2-1470790-4	24	**23.00** .906	**25.05** .986	**27.00** 1.063
2-1470790-5	25	**24.00** .945	**26.05** 1.025	**28.00** 1.102
2-1470790-6	26	**25.00** .984	**27.05** 1.064	**29.00** 1.142
2-1470790-7	27	**26.00** 1.024	**28.05** 1.104	**30.00** 1.181
2-1470790-8	28	**27.00** 1.063	**29.05** 1.143	**31.00** 1.220
2-1470790-9	29	**28.00** 1.102	**30.05** 1.183	**32.00** 1.259
3-1470790-0	30	**29.00** 1.142	**31.05** 1.222	**33.00** 1.299

Catalog 1-1773440-6
Revised 05-06

www.tycoelectronics.com

Dimensions are in millimeters and inches unless otherwise specified. Values in brackets are standard equivalents.

Dimensions are shown for reference purposes only. Specifications subject to change.

USA: 1-800-522-6752
Canada: 1-905-470-4425
Mexico: 01-800-733-8926
C. America: 52-55-5-729-0425

South America: 55-11-3611-1514
Hong Kong: 852-2735-1628
Japan: 81-44-844-8013
UK: 44-141-810-8967

Product Dimensions (Continued)

1.25 mm, FFC Connector, Vertical

Lead Free **84534**

Material and Finish

Housing — Glass filled PBT, white color

Contact — Phosphor bronze

Technical Documents

Product Specification — 108-51021

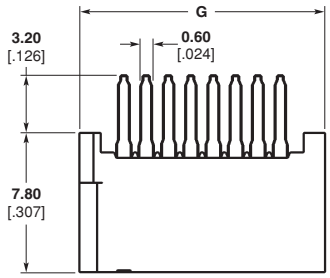

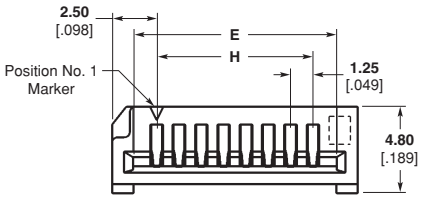

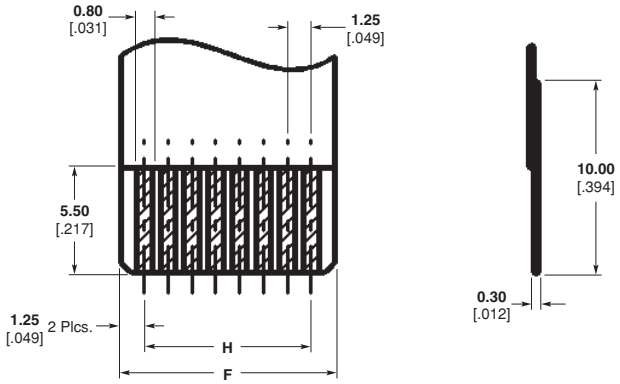

Recommended FFC Layout

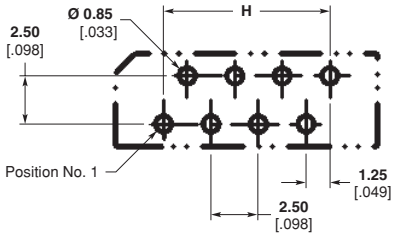

Recommended PCB Layout

Catalog 1-1773440-6
Revised 05-06

www.tycoelectronics.com

Dimensions are in millimeters and inches unless otherwise specified. Values in brackets are standard equivalents.

Dimensions are shown for reference purposes only. Specifications subject to change.

USA: 1-800-522-6752
Canada: 1-905-470-4425
Mexico: 01-800-733-8926
C. America: 52-55-5-729-0425

South America: 55-11-3611-1514
Hong Kong: 852-2735-1628
Japan: 81-44-844-8013
UK: 44-141-810-8967

1.25 mm, FFC Connector, Vertical

Lead Free 84534

Technical Documents

Product Specification — 108-51021

Product Dimensions (Continued)

Part Number	No. of Contacts	Dimension			
		E	F	G	H
84534-4	4	**6.40** .251	**6.25** .246	**8.75** .344	**3.75** .147
84534-5	5	**7.65** .301	**7.50** .295	**10.00** .393	**5.00** .196
84534-6	6	**8.90** .350	**8.75** .344	**11.25** .442	**6.25** .246
84534-7	7	**10.15** .399	**10.00** .393	**12.50** .492	**7.50** .295
84534-8	8	**11.40** .448	**11.25** .442	**13.75** .541	**8.75** .344
84534-9	9	**12.65** .498	**12.50** .492	**15.00** .590	**10.00** .393
1-84534-0	10	**13.90** .547	**13.75** .541	**16.25** .639	**11.25** .442
1-84534-1	11	**15.15** .596	**15.00** .590	**17.50** .688	**12.50** .492
1-84534-2	12	**16.40** .645	**16.25** .639	**18.75** .738	**13.75** .541
1-84534-3	13	**17.65** .694	**17.50** .688	**20.00** .787	**15.00** .590
1-84534-4	14	**18.90** .744	**18.75** .738	**21.25** .836	**16.25** .639
1-84534-5	15	**20.15** .793	**20.00** .787	**22.50** .885	**17.50** .688
1-84534-6	16	**21.40** .842	**21.25** .836	**23.75** .935	**18.75** .738
1-84534-7	17	**22.65** .891	**22.50** .885	**25.00** .984	**20.00** .787
1-84534-8	18	**23.90** .940	**23.75** .935	**26.25** 1.033	**21.25** .836
1-84534-9	19	**25.15** .990	**25.00** .984	**27.50** 1.082	**22.50** .885
2-84534-0	20	**26.40** 1.039	**26.25** 1.033	**28.75** 1.131	**23.75** .935
2-84534-1	21	**27.65** 1.088	**27.50** 1.082	**30.00** 1.181	**25.00** .984
2-84534-2	22	**28.90** 1.137	**28.75** 1.131	**31.25** 1.230	**26.25** 1.033
2-84534-3	23	**30.15** 1.187	**30.00** 1.181	**32.50** 1.279	**27.50** 1.082
2-84534-4	24	**31.40** 1.236	**31.25** 1.230	**33.75** 1.328	**28.75** 1.131
2-84534-5	25	**32.65** 1.285	**32.50** 1.279	**35.00** 1.377	**30.00** 1.181
2-84534-6	26	**33.90** 1.334	**33.75** 1.328	**36.25** 1.427	**31.25** 1.230
2-84534-7	27	**35.15** 1.383	**35.00** 1.377	**37.50** 1.476	**32.50** 1.279
2-84534-8	28	**36.40** 1.433	**36.25** 1.427	**38.75** 1.525	**33.75** 1.328
2-84534-9	29	**37.65** 1.482	**37.50** 1.476	**40.00** 1.574	**35.00** 1.377
3-84534-0	30	**38.90** 1.531	**38.75** 1.525	**41.25** 1.624	**36.25** 1.427
3-84534-1	31	**40.15** 1.580	**40.00** 1.574	**42.50** 1.673	**37.50** 1.476
3-84534-2	32	**41.40** 1.629	**41.25** 1.624	**43.75** 1.722	**38.75** 1.525
3-84534-3	33	**42.65** 1.679	**42.50** 1.673	**45.00** 1.771	**40.00** 1.574
3-84534-4	34	**43.90** 1.728	**43.75** 1.722	**46.25** 1.820	**41.25** 1.624
3-84534-5	35	**45.15** 1.777	**45.00** 1.771	**47.50** 1.870	**42.50** 1.673
3-84534-6	36	**46.40** 1.826	**46.25** 1.820	**48.75** 1.919	**43.75** 1.722
3-84534-7	37	**47.65** 1.875	**47.50** 1.870	**50.00** 1.968	**45.00** 1.771
3-84534-8	38	**48.90** 1.925	**48.75** 1.919	**51.25** 2.017	**46.25** 1.820
3-84534-9	39	**50.15** 1.974	**50.00** 1.968	**52.50** 2.066	**47.50** 1.870
4-84534-0	40	**51.40** 2.023	**51.25** 2.017	**53.75** 2.116	**48.75** 1.919

Catalog 1-1773440-6
Revised 05-06

www.tycoelectronics.com

Dimensions are in millimeters and inches unless otherwise specified. Values in brackets are standard equivalents.

Dimensions are shown for reference purposes only. Specifications subject to change.

USA: 1-800-522-6752
Canada: 1-905-470-4425
Mexico: 01-800-733-8926
C. America: 52-55-5-729-0425

South America: 55-11-3611-1514
Hong Kong: 852-2735-1628
Japan: 81-44-844-8013
UK: 44-141-810-8967

Product Dimensions (Continued)

1.25 mm, FFC Connector, Right Angle, Top Contact Non-ZIF

Lead Free 84533

Material and Finish

Housing — Glass filled PBT, white color

Contact — Post plated tin phosphor bronze

Technical Documents

Product Specification — 108-51021

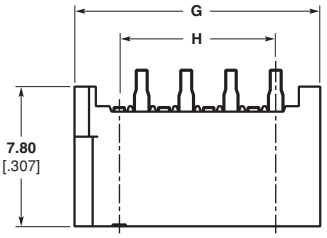

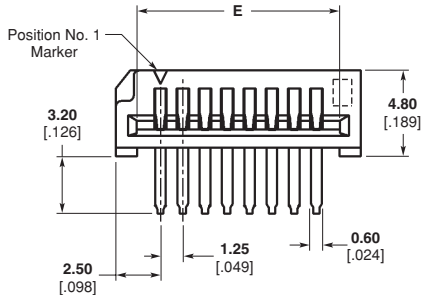

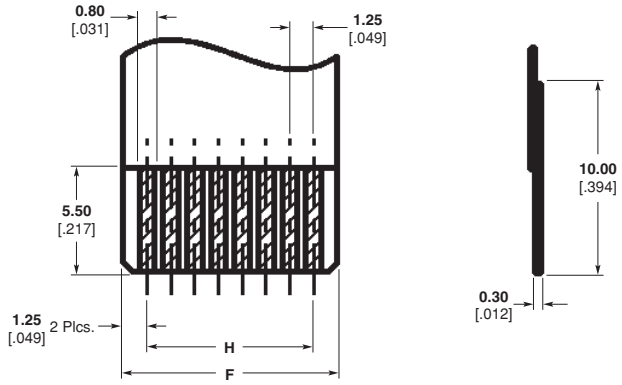

Recommended FFC Layout

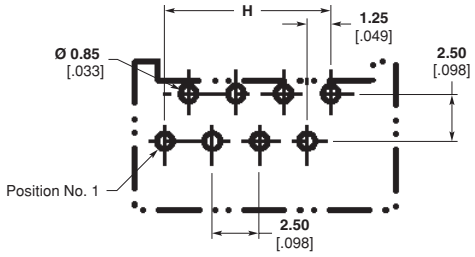

Recommended PCB Layout

Catalog 1-1773440-6
Revised 05-06

www.tycoelectronics.com

Dimensions are in millimeters and inches unless otherwise specified. Values in brackets are standard equivalents.

Dimensions are shown for reference purposes only. Specifications subject to change.

USA: 1-800-522-6752
Canada: 1-905-470-4425
Mexico: 01-800-733-8926
C. America: 52-55-5-729-0425

South America: 55-11-3611-1514
Hong Kong: 852-2735-1628
Japan: 81-44-844-8013
UK: 44-141-810-8967

1.25 mm, FFC Connector, Right Angle, Top Contact Non-ZIF

Lead Free 84533

Technical Documents
Product Specification — 108-51021

Product Dimensions (Continued)

Part Number	No. of Contacts	Dimension			
		E	F	G	H
84533-4	4	**6.40** .251	**6.25** .246	**8.75** .344	**3.75** .147
84533-5	5	**7.65** .301	**7.50** .295	**10.00** .393	**5.00** .196
84533-6	6	**8.90** .350	**8.75** .344	**11.25** .442	**6.25** .246
84533-7	7	**10.15** .399	**10.00** .393	**12.50** .492	**7.50** .295
84533-8	8	**11.40** .448	**11.25** .442	**13.75** .541	**8.75** .344
84533-9	9	**12.65** .498	**12.50** .492	**15.00** .590	**10.00** .393
1-84533-0	10	**13.90** .547	**13.75** .541	**16.25** .639	**11.25** .442
1-84533-1	11	**15.15** .596	**15.00** .590	**17.50** .688	**12.50** .492
1-84533-2	12	**16.40** .645	**16.25** .639	**18.75** .738	**13.75** .541
1-84533-3	13	**17.65** .694	**17.50** .688	**20.00** .787	**15.00** .590
1-84533-4	14	**18.90** .744	**18.75** .738	**21.25** .836	**16.25** .639
1-84533-5	15	**20.15** .793	**20.00** .787	**22.50** .885	**17.50** .688
1-84533-6	16	**21.40** .842	**21.25** .836	**23.75** .935	**18.75** .738
1-84533-7	17	**22.65** .891	**22.50** .885	**25.00** .984	**20.00** .787
1-84533-8	18	**23.90** .940	**23.75** .935	**26.25** 1.033	**21.25** .836
1-84533-9	19	**25.15** .990	**25.00** .984	**27.50** 1.082	**22.50** .885
2-84533-0	20	**26.40** 1.039	**26.25** 1.033	**28.75** 1.131	**23.75** .935
2-84533-1	21	**27.65** 1.088	**27.50** 1.082	**30.00** 1.181	**25.00** .984
2-84533-2	22	**28.90** 1.137	**28.75** 1.131	**31.25** 1.230	**26.25** 1.033
2-84533-3	23	**30.15** 1.187	**30.00** 1.181	**32.50** 1.279	**27.50** 1.082
2-84533-4	24	**31.40** 1.236	**31.25** 1.230	**33.75** 1.328	**28.75** 1.131
2-84533-5	25	**32.65** 1.285	**32.50** 1.279	**35.00** 1.377	**30.00** 1.181
2-84533-6	26	**33.90** 1.334	**33.75** 1.328	**36.25** 1.427	**31.25** 1.230
2-84533-7	27	**35.15** 1.383	**35.00** 1.377	**37.50** 1.476	**32.50** 1.279
2-84533-8	28	**36.40** 1.433	**36.25** 1.427	**38.75** 1.525	**33.75** 1.328
2-84533-9	29	**37.65** 1.482	**37.50** 1.476	**40.00** 1.574	**35.00** 1.377
3-84533-0	30	**38.90** 1.531	**38.75** 1.525	**41.25** 1.624	**36.25** 1.427
3-84533-1	31	**40.15** 1.580	**40.00** 1.574	**42.50** 1.673	**37.50** 1.476
3-84533-2	32	**41.40** 1.629	**41.25** 1.624	**43.75** 1.722	**38.75** 1.525
3-84533-3	33	**42.65** 1.679	**42.50** 1.673	**45.00** 1.771	**40.00** 1.574
3-84533-4	34	**43.90** 1.728	**43.75** 1.722	**46.25** 1.820	**41.25** 1.624
3-84533-5	35	**45.15** 1.777	**45.00** 1.771	**47.50** 1.870	**42.50** 1.673
3-84533-6	36	**46.40** 1.826	**46.25** 1.820	**48.75** 1.919	**43.75** 1.722
3-84533-7	37	**47.65** 1.875	**47.50** 1.870	**50.00** 1.968	**45.00** 1.771
3-84533-8	38	**48.90** 1.925	**48.75** 1.919	**51.25** 2.017	**46.25** 1.820
3-84533-9	39	**50.15** 1.974	**50.00** 1.968	**52.50** 2.066	**47.50** 1.870
4-84533-0	40	**51.40** 2.023	**51.25** 2.017	**53.75** 2.116	**48.75** 1.919

Catalog 1-1773440-6
Revised 05-06

www.tycoelectronics.com

Dimensions are in millimeters and inches unless otherwise specified. Values in brackets are standard equivalents.

Dimensions are shown for reference purposes only. Specifications subject to change.

USA: 1-800-522-6752
Canada: 1-905-470-4425
Mexico: 01-800-733-8926
C. America: 52-55-5-729-0425

South America: 55-11-3611-1514
Hong Kong: 852-2735-1628
Japan: 81-44-844-8013
UK: 44-141-810-8967

Engineering Notes

Catalog 1-1773440-6
Revised 5-05

www.tycoelectronics.com

Dimensions are in millimeters and inches unless otherwise specified. Values in brackets are standard equivalents.

Dimensions are shown for reference purposes only. Specifications subject to change.

USA: 1-800-522-6752
Canada: 1-905-470-4425
Mexico: 01-800-733-8926
C. America: 52-55-5-729-0425

South America: 55-11-3611-1514
Hong Kong: 852-2735-1628
Japan: 81-44-844-8013
UK: 44-141-810-8967

Engineering Notes

Catalog 1-1773440-6
Revised 5-05

www.tycoelectronics.com

Dimensions are in millimeters and inches unless otherwise specified. Values in brackets are standard equivalents.

Dimensions are shown for reference purposes only. Specifications subject to change.

USA: 1-800-522-6752
Canada: 1-905-470-4425
Mexico: 01-800-733-8926
C. America: 52-55-5-729-0425

South America: 55-11-3611-1514
Hong Kong: 852-2735-1628
Japan: 81-44-844-8013
UK: 44-141-810-8967

Americas

Argentina – Buenos Aires
Phone: +54-11-4733-2200
Fax: +54-11-4733-2211

Brasil – São Paulo
Phone: +55-11-3611-1311
Fax: +55-11-3611-0397

Canada – Markham
Phone: +905-475-6222
Fax: +905-474-5520
Product Information Center:
(Technical Support)
Phone: +905-470-4425
Fax: +905-474-5525

Colombia – Bogota
Phone: +57-1-231-9398
Fax: +57-1-660-0206

Mexico – Mexico City
Phone: +52-5-729-0400
Fax: +52-5-361-8545

United States – Harrisburg, PA
Phone: +717-564-0100
Fax: +717-986-7575
Product Information Center:
(Technical Support)
Phone: +800-522-6752
Fax: +717-986-7575

For Latin/South American Countries not shown
Phone: +54-11-4733-2015
Fax: +54-11-4733-2083

Asia/Pacific

Australia – Sydney
Phone: +61-2-9554-2600
Fax: +61-2-9502-2556
Product Information Center:
(Technical Support)
Phone: +61-2-9840-8200
Fax: +61-2-9634-6188

India – Bangalore
Phone: +91-80-285-40800
Fax: +91-80-285-40820

Indonesia – Jakarta
Phone: +65-6482-0311
Fax: +65-6482-1012

Japan – Toyko
Phone: +81-44-844-8111
Fax: +81-44-812-3207
Product Information Center:
(Technical Support)
Phone: +81-44-844-8013
Fax: +81-44-812-3200
Raychem Products
Phone: +81-44-900-5102
Fax: +81-44-5025-5027

Korea – Seoul
Phone: +82-2-3415-4500
Fax: +82-2-3486-3810

Malaysia – Kuala Lumpur
Phone: +60-3-78053055
Fax: +60-3-78053066

New Zealand – Auckland
Phone: +64-9-634-4580
Fax: +64-9-634-4586

Philippines – Makati City
Phone: +632-848-0171
Fax: +632-867-8661

People's Republic of China
Hong Kong
Phone: +852-2735-1628
Fax: +852-2735-0243

Shanghai
Phone: +86-21-53838188/64850602
Fax: +86-21-53838018/54260180

Shunde
Phone: +86-765-775-1368
Fax: +86-765-775-2823

Europe/Middle East/Africa

Austria – Vienna
Phone: +43-190-560-0
Fax: +43-190-560-1333

Belgium – Kessel-Lo
Phone: +32-16-35-23-00
Fax: +32-16-35-23-52

Bulgaria – Sofia
Phone: +359-2-971-2152
Fax: +359-2-971-2153

Czech Republic – Kurim
Phone: +420-5-41-162-111
Fax: +420-5-41-162-223

Denmark – Viby J
Phone: +45-70-15-52-00
Fax: +45-43-44-14-14

Egypt – Cairo
Phone: +20-2-417-76-47
Fax: +20-2-419-23-34

Estonia – Tallinn
Phone: +372-65-05-474
Fax: +372-65-05-470

Finland – Helsinki
Phone: +358-95-12-34-20
Fax: +358-95-12-34-250

France –
Cergy-Pontoise
Phone: +33-1-3420-8888
Fax: +33-1-3420-8600
Product Information Center:
(Technical Support)
Phone: +33-1-3420-8943
Fax: +33-1-3420-8623

France
Tyco Electronics Export –
St Ouen L'Aumone
Phone: +33-1-3440-7200
Fax: +33-1-3440-7220 or
+33-1-3440-7230

Germany – Bensheim
Phone: +49-6251-133-0
Fax: +49-6251-133-1600
Product Information Center:
(Technical Support)
Phone: +49-6251-133-1999
Fax: +49-6251-133-1988

Germany – Langen
Phone: +49-6103-709-0
Fax: +49-6103-709-1223

Germany – Speyer
Phone: +49-6232-30-0
Fax: +49-6232-30-2243

Germany
HTS Division – Neunkirchen
Phone: +49-2247-305-0
Fax: +49-2247-305-122

Great Britain –
Stanmore Middlesex
Phone: +44-208-954-2356
Fax: +44-208-954-6234
Product Information Center:
(Technical Support)
Freephone GB: 0800-267-666
Phone: +44-141 810 8968
Fax: +44-141 810 8971
Great Britain – Dorcan, Swindon
Raychem Products
Phone: +44-1793-528171
Fax: +44-1793-572516

Greece – Athens
Phone: +30-1-9370-396/397
Fax: +30-1-9370-655

Hungary – Budapest
Phone: +36-1-289-1000
Fax: +36-1-289-1010

Ireland – Dublin
Phone: +353-1-820-3000
Fax: +353-1-820-9790

Israel – Yokneam
Phone: +972-4-959-0508
Fax: +972-4-959-0506

Italy – Collegno (Torino)
Phone: +39-011-4012-111
Fax: +39-011-4031-116

Lithuania – Vilnius
Phone: +370-5-2131-402
Fax: +370-5-2131-403

Netherlands – 's-Hertogenbosch
Phone: +31-73-624-6246
Fax: +31-73-621-2365
Product Information Center:
(Technical Support)
Phone: +31-73-6246-999
Fax: +31-73-6246-998

Norway – Nesbru
Phone: +47-66-77-8899
Fax: +47-66-77-8855

Poland – Warsaw
Phone: +48-22-45-76-700
Fax: +48-22-45-76-720

Romania – Bucharest
Phone: +40-1-311-3479/3596
Fax: +40-1-312-0574

Russia – Moscow
Phone: +7-095-926-5506/07/08/09
Fax: +7-095-926-5505

Russia – St. Petersburg
Phone: +7-812-118-8192
Fax: +7-812-118-8193

Slovakia – Banská Bystrica
Phone: +421-48-415-20-11/12
Fax: +421-48-415-20-13

Slovenia – Ljubljana
Phone: +386-1561-3270
Fax: +386-1561-3240

South Africa – Port Elizabeth
Phone: +27-41-405-4500
Fax: +27-41-486-1314

Spain – Barcelona
Phone: +34-93-291-0330
Fax: +34-93-201-7879
Product Information Center:
(Technical Support):
Phone: +34-93-291-0330
Fax: +34-93-200-3779

Sweden – Upplands Väsby
Phone: +46-8-50-72-50-00
Fax: +46-8-50-72-50-01

Switzerland – Steinach
Phone: +41-71-447-0447
Fax: +41-71-447-0444

Turkey – Istanbul
Phone: +90-212-281-8181/2/3
Fax: +90-212-281-8184

Ukraine – Kiev
Phone: +38-044-238-6908
Fax: +38-044-568-5740

Disclaimer: While Tyco Electronics has made every reasonable effort to ensure the accuracy of the information in this catalog, Tyco Electronics does not guarantee that it is error-free, nor does Tyco Electronics make any other representation, warranty or guarantee that the information is accurate, correct, reliable or current. Tyco Electronics reserves the right to make any adjustments to the information contained herein at any time without notice. Tyco Electronics expressly disclaims all implied warranties regarding the information contained herein,including, but not limited to, any implied warranties of merchantability or fitness for a particular purpose.