Cradle Relay Accessories and Mounting

Sockets for cradle relays in 2 different versions

- **Sockets with hand solder terminals**
- **Sockets with PCB terminals**
- **Available in 3 different sizes**

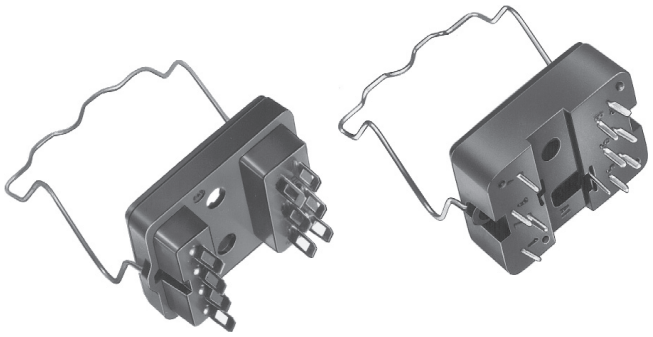

Technical Data	
ROHS compliant (Directive 2002/95/EC) as per product date code 050	
Sockets with hand solder terminals	
Weight: size I / II / III	approx. 3.5 / 4.5 / 5.5 g
Sockets with PCB terminals	
Weight: size I / II / III	approx. 4.5 /5.5 / 6.5 g
Terminal material	CuSn8 FB 390 plated with min. 3µrm silver or min. 1 µm gold

Technical Data (continued)	
Socket material hand solder terminals	Phenolformaldehyde type 31 (DIN 7708, part 2)
Socket material PCB terminals	Makrolom (polycarbonate)
Maximum continuous current at 70°C	5 A

Sizes Hand Solder Terminals

Size I

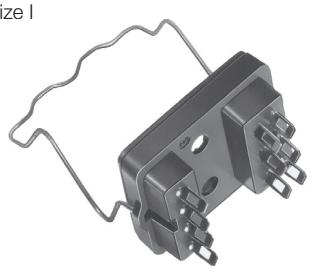

Size II

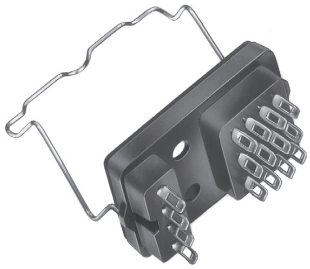

Size III

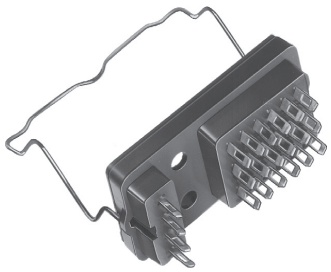

PCB Terminals

Size I

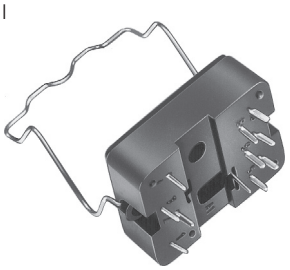

Size II

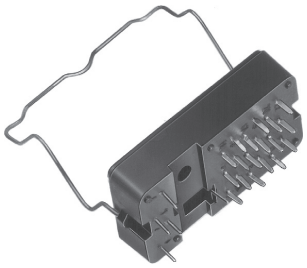

Size III

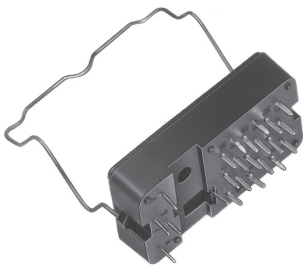

07-2012, Rev. 0712
www.te.com
© 2011 Tyco Electronics Corporation,
a TE Connectivity Ltd. company

Datasheets and product specification according to IEC 61810-1 and to be used only together with the 'Definitions' section.

Datasheets and product data is subject to the terms of the disclaimer and all chapters of the 'Definitions' section, available at http://relays.te.com/definitions

Datasheets, product data, 'Definitions' section, application notes and all specifications are subject to change.

Cradle Relay Accessories and Mounting (Continued)

Dimensions

Socket	Size I	Size II	Size III
Dimension a	26.6mm	32.5mm	38mm

Sockets with hand solder terminals
with hold-down spring for cradle relays N, S and P

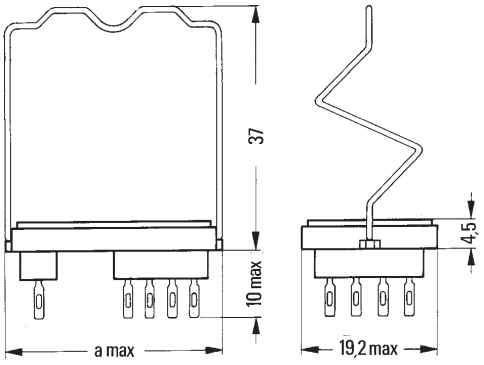

Sockets with PCB terminals

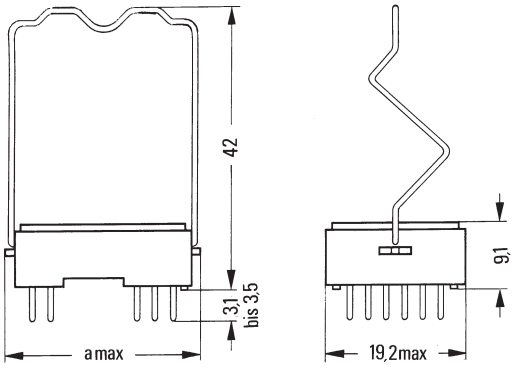

with hold-down spring for cradle relay W

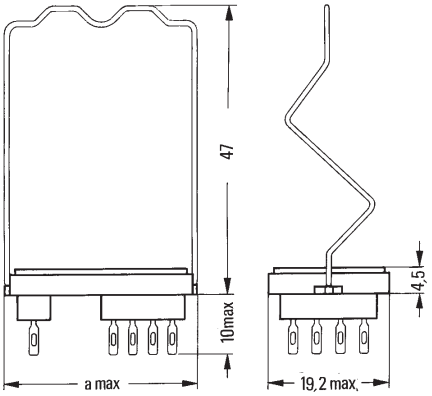

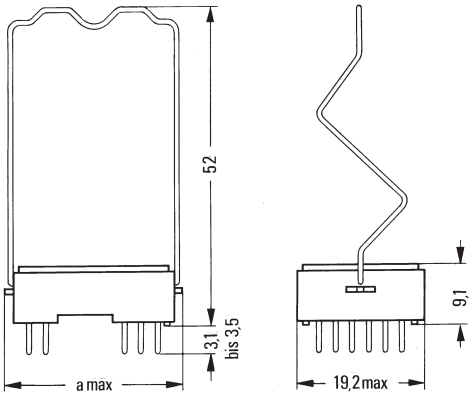

Ordering Code*)

Version	Size	Ordering Code	Part Number
Sockets			
for printed circuit mounting, terminals silver-plated with earth terminal	I II III	V23154-Z1001 V23154-Z1002 V23154-Z1028	1393824-1 9-1393809-1 1-1393824-0
for solder terminals, hand solder terminals, silver-plated	I II III	V23154-Z1005 V23154-Z1006 V23154-Z1015	1393824-4 1393824-5 1393824-8
Hold-down springs			
for cradle relays N, S and P	I II III	V23154-Z1021 V23154-Z1022 V23154-Z1034	1393827-1 1393827-2 1393760-2
for cradle relay W	I II	V23154-Z1023 V23154-Z1024	1393827-3 1393760-1

*) Please note that hold down springs have to be ordered separately.

07-2012, Rev. 0712
www.te.com
© 2011 Tyco Electronics Corporation,
a TE Connectivity Ltd. company

Datasheets and product specification according to IEC 61810-1 and to be used only together with the 'Definitions' section.

Datasheets and product data is subject to the terms of the disclaimer and all chapters of the 'Definitions' section, available at http://relays.te.com/definitions

Datasheets, product data, 'Definitions' section, application notes and all specifications are subject to change.

Cradle Relay Accessories and Mounting (Continued)

Dimensions
Minimum spacings between sockets

Socket	Size I	Size II	Size III
Dimension a and b	27mm	33mm	39mm
Dimension c	42mm	48mm	54mm

with hold-down spring for cradle relays N, S and P

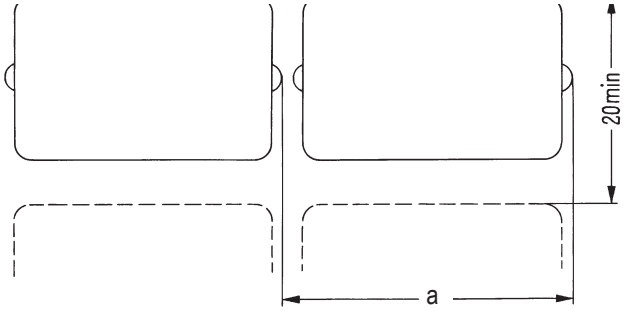

for cradle relay P
Relays oriented in the same direction

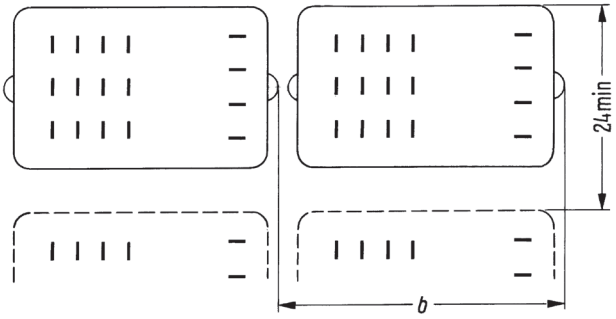

Relays oriented inversely to each other

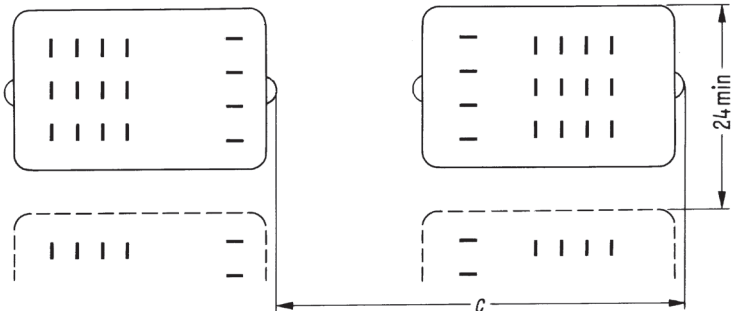

When mounting cradle relay P consideration should be given to magnetic fields. Strong DC magnetic fields, possibly caused by adjacent relays,and large iron masses are the most common causes of interference. Experience has shown that under normal operating conditions the minimum spacings specified for cradle relay P are sufficient to prevent cross interference.

Mounting hole layout for cradle relays and sockets with hand solder terminals
with hold-down spring for cradle relays N, S and P

Size I

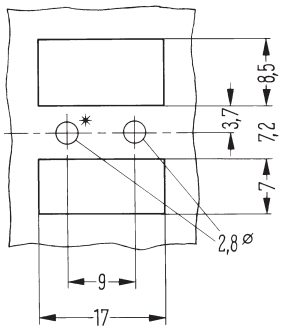

Size II

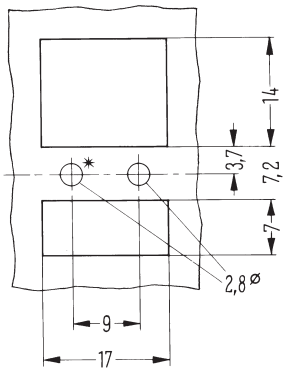

Size III

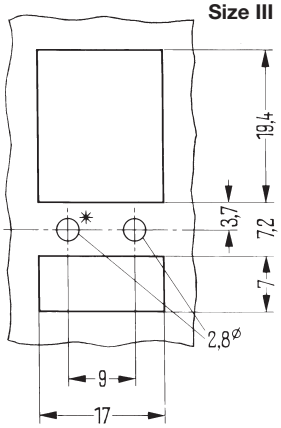

*) This hole is omitted when mounting hole layouts is intended for the socket

07-2012, Rev. 0712
www.te.com
© 2011 Tyco Electronics Corporation,
a TE Connectivity Ltd. company

Datasheets and product specification according to IEC 61810-1 and to be used only together with the 'Definitions' section.

Datasheets and product data is subject to the terms of the disclaimer and all chapters of the 'Definitions' section, available at http://relays.te.com/definitions

Datasheets, product data, 'Definitions' section, application notes and all specifications are subject to change.

Cradle Relay Accessories and Mounting (Continued)

Fixing of the socket

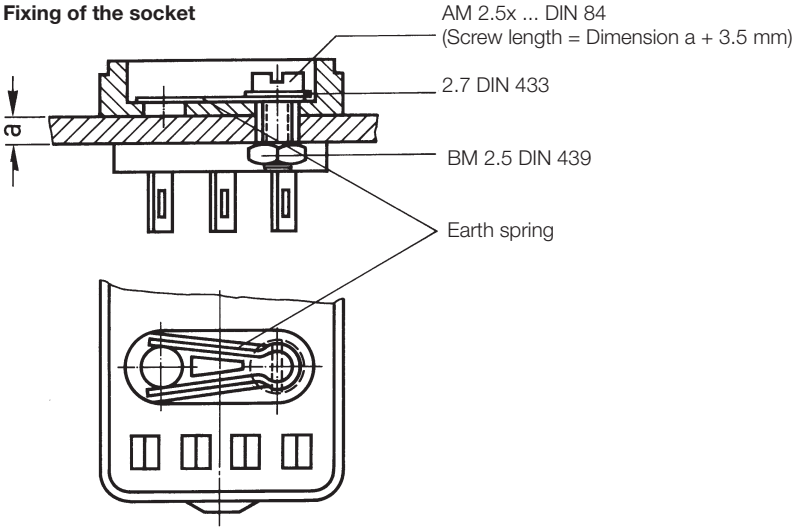

Direct mounting of relays without socket requires a fixing nut M2.5 DIN 934-m6AU.
Ordering code: D00934-A0025-S001

Dimensions
Mounting hole layout for sockets with PCB terminals

View on the terminals, basic grid 2.5mm according to EN 60097

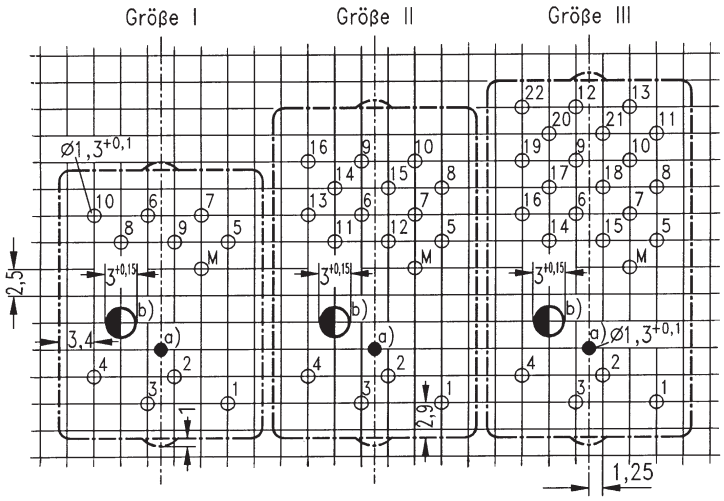

M = Earth terminal

a) Hole for mechanical armature actuation, if required
b) Hole for the socket mounting with screw M1.6

Fixing of the socket

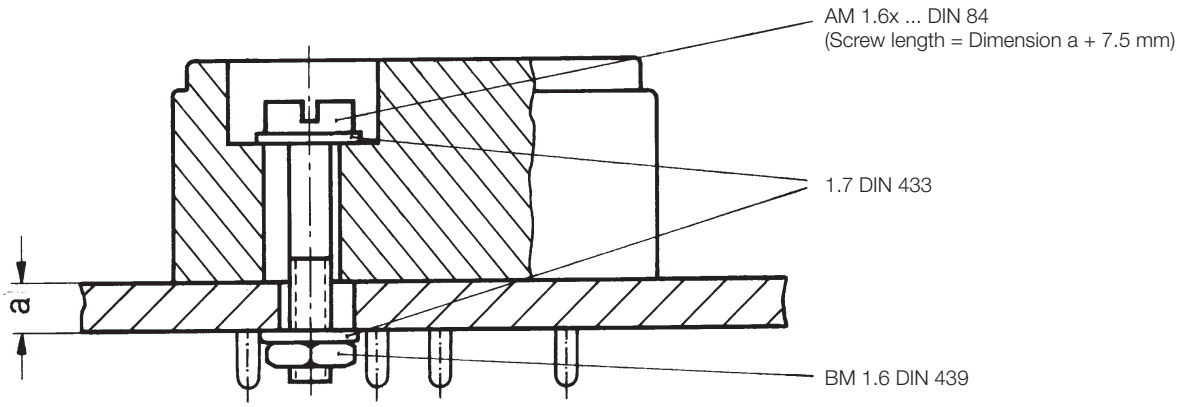

07-2012, Rev. 0712
www.te.com
© 2011 Tyco Electronics Corporation,
a TE Connectivity Ltd. company

Datasheets and product specification according to IEC 61810-1 and to be used only together with the 'Definitions' section.

Datasheets and product data is subject to the terms of the disclaimer and all chapters of the 'Definitions' section, available at http://relays.te.com/definitions

Datasheets, product data, 'Definitions' section, application notes and all specifications are subject to change.