INCH-POUND
MIL-M-38510/315D
27 October 2003
SUPERSEDING
MIL-M-38510/315C
17 JANUARY 1984

MILITARY SPECIFICATION

MICROCIRCUITS, DIGITAL, LOW-POWER SCHOTTKY TTL, COUNTERS, MONOLITHIC SILICON

Inactive for new design after 18 April 1997.

This specification is approved for use by all Departments and Agencies of the Department of Defense.

The requirements for acquiring the product herein shall consist of this specification sheet and MIL-PRF 38535

1. SCOPE

1.1 Scope. This specification covers the detail requirements for monolithic silicon, low power Schottky TTL, binary and decade counters. Two product assurance classes and a choice of case outlines/lead finish are provided for each type and are reflected in the complete part number. For this product, the requirements of MIL-M-38510 have been superseded by MIL-PRF-38535, (see 6.3).

1.2 Part or Identifying Number (PIN). The PIN should be in accordance with MIL-PRF-38535, and as specified herein.

1.2.1 Device types. The device types should be as follows:

Device type	Circuit
01	Decade counter
02	4-bit binary counter
03	Synchronous 4-bit decade counter (asynchronous clear)
04	Synchronous 4-bit binary counter (asynchronous clear)
05	Synchronous 4-bit up/down decade counter
06	Synchronous 4-bit up/down binary counter
07	Synchronous 4-bit up/down decade counter (with clear)
08	Synchronous 4-bit up/down binary counter (with clear)
09	Synchronous 4-bit up/down binary counter (with mode control)
10	Divide-by-twelve counter
11	Synchronous 4-bit decade counter (with synchronous clear)
12	Synchronous 4-bit binary counter (with synchronous clear)
13	Synchronous 4-bit decade counter (with mode control)

1.2.2 Device class. The device class should be the product assurance level as defined in MIL-PRF-38535.

Comments, suggestions, or questions on this document should be addressed to: Commander, Defense Supply Center Columbus, ATTN: DSCC-VAS, 3990 East Broad St., Columbus, OH 43216-5000, or emailed to bipolar@dscc.dla.mil. Since contact information can change, you may want to verify the currency of this address information using the ASSIST Online database at www.dodssp.daps.mil.

1.2.3 Case outlines. The case outlines should be as designated in MIL-STD-1835 and as follows:

Outline letter	Descriptive designator	Terminals	Package style
A	GDFP5-F14 or CDFP6-F14	14	Flat pack
B	GDFP4-F14	14	Flat pack
C	GDIP1-T14 or CDIP2-T14	14	Dual-in-line
D	GDFP1-F14 or CDFP2-F14	14	Flat pack
E	GDIP1-T16 or CDIP2-T16	16	Dual-in-line
F	GDFP2-F16 or CDFP3-F16	16	Flat pack
2	CQCC1-N20	20	Square leadless chip carrier

1.3 Absolute maximum ratings.

Supply voltage range ..... -0.5 V dc to 7.0 V dc
Input voltage range ..... -1.2 V dc at -18 mA to 5.5 V dc
Storage temperature range ..... -65° to +150°C
Maximum power dissipation, (P_D) 1/ :
  Device type 05, 06, 07, 08..... 187 mW
  Device type 01, 02, 10..... 83 mW
  Device type 03, 04, 11, 12..... 176 mW
  Device type 09, 13 ..... 193 mW
Lead temperature (soldering, 10 seconds) ..... 300°C
Thermal resistance, junction to case (θ_{JC}):
  Cases A, B, C, D, E, F, and 2 (See MIL-STD-1835)
Junction temperature (T_J) 3/..... 175°C

1.4 Recommended operating conditions. 2/

Maximum low level output current (I_{oL}) ..... 4.0 mA
Supply voltage (V_{CC}) ..... 4.5 V dc minimum to 5.5 V dc maximum
Minimum high-level input voltage (V_{IH}) ..... 2.0 V dc
Maximum low-level input voltage (V_{IL}) ..... 0.7 V dc
Normalized fanout (each output)
  Types 01, 02, 05, 06, 07, 08, 10..... 10 maximum
  Types 03, 04, 09, 11, 12, 13.....
    Low-level ..... 10 maximum
    High-level ..... 20 maximum
Width of input count pulse, t_p(IN)
  Types 01, 02, 10
    Input A, reset..... 15 ns minimum
    Input B..... 30 ns minimum
  Types 07, 08 ..... 20 ns minimum
Width of reset pulse, t_p(reset)
  Types 01, 02, 10 ..... 25 ns minimum
Count enable time
  Type 09, enable ..... 40 ns minimum

1/ Must withstand the added P_D due to short-circuit test (e.g., I_{OS}).
2/ A change of states on the U/$\overline{D}$ input for device types 09 and 13 is not recommended when the clock input is low. This may result in an erroneous count.
3/ Maximum junction temperature shall not be exceeded except for allowable short duration burn-in screening conditions in accordance with MIL-PRF-38535.

Input clock frequency, f_{clock}
- Types 01, 02, 10
  - Input A ..... 0 to 29 MHz
- Types 03, 04, 11, 12 ..... 0 to 22 MHz
- Types 09, 13 ..... 0 to 18 MHz
- Types 07, 08 ..... 0 to 20 MHz
- Types 05, 06 ..... 0 to 25 MHz

Width of clock pulse, t_w(clock)
- Types 03, 06, 09, 11, 12, 13 ..... 25 ns minimum
- Types 04 ..... 30 ns minimum
- Types 05 ..... 20 ns minimum

Width of clear pulse, t_w (clear)
- Types 03, 04, 05, 06, 07, 08, 11, 12 ..... 20 ns minimum

Setup time, $t_{(setup)}$
- Types 03, 11, 12
  - Enable P ..... 25 ns minimum
  - Load ..... 25 ns minimum
  - Clear (types 11 and 12 only) ..... 20 ns minimum
- Type 04
  - Enable P ..... 35 ns minimum
  - Load ..... 35 ns minimum
  - Data inputs
    - Types 03, 09, 11, 12, 13 ..... 20 ns minimum
    - Type 04 ..... 25 ns minimum
    - Types 07, 08 ..... 30 ns minimum
- Type 05
  - Data, L inputs ..... 15 ns minimum
  - $U/\overline{D}$ input ..... 30 ns minimum
  - EP, ET inputs ..... 15 ns minimum
- Type 06
  - Data, L inputs ..... 25 ns minimum
  - $U/\overline{D}$ input ..... 30 ns minimum
  - EP, ET, inputs ..... 25 ns minimum

Hold time at any input, $t_{(hold)}$
- Types 09, 13 ..... 0 ns minimum
- Types 07, 08 ..... 10 ns minimum
- Types 05, 06
  - Data, EP, ET inputs ..... 5 ns minimum
  - L, $U/\overline{D}$ inputs ..... 0 ns minimum
- Types 03, 04, 11, 12 ..... 10 ns minimum
- Types 03, 04, 11, 12 t_W (clear) ..... 0 ns minimum

Case operating temperature range (T_c) ..... -55°C to +125°C

2. APPLICABLE DOCUMENTS

2.1 General. The documents listed in this section are specified in sections 3, 4, or 5 of this specification. This section does not include documents cited in other sections of this specification or recommended for additional information or as examples. While every effort has been made to ensure the completeness of this list, document users are cautioned that they must meet all specified requirements of documents cited in sections 3, 4, or 5 of this specification, whether or not they are listed.

2.2 Government documents.

2.2.1 Specifications and Standards. The following specifications and standards form a part of this specification to the extent specified herein. Unless otherwise specified, the issues of these documents are those cited in the solicitation or contract.

DEPARTMENT OF DEFENSE SPECIFICATIONS

MIL-PRF-38535 - Integrated Circuits (Microcircuits) Manufacturing, General Specification for.

DEPARTMENT OF DEFENSE STANDARDS

MIL-STD-883 - Test Method Standard for Microelectronics.
MIL-STD-1835 - Interface Standard Electronic Component Case Outlines

(Copies of these documents are available online at http://assist.daps.dla.mil;quicksearch/ or www.dodssp.daps.mil or from the Standardization Document Order Desk, 700 Robbins Avenue, Building 4D, Philadelphia, PA 19111-5094.)

2.3 Order of precedence. In the event of a conflict between the text of this specification and the references cited herein, the text of this document takes precedence. Nothing in this document, however, supersedes applicable laws and regulations unless a specific exemption has been obtained.

3. REQUIREMENTS

3.1 Qualification. Microcircuits furnished under this specification shall be products that are manufactured by a manufacturer authorized by the qualifying activity for listing on the applicable qualified manufacturers list before contract award (see 4.3 and 6.4).

3.2 Item requirements. The individual item requirements shall be in accordance with MIL-PRF-38535 and as specified herein or as modified in the device manufacturer's Quality Management (QM) plan. The modification in the QM plan shall not affect the form, fit, or function as described herein.

3.3 Design, construction, and physical dimensions. The design, construction, and physical dimensions shall be as specified in MIL-PRF-38535 and herein.

3.3.1 Terminal connections and logic diagrams. The terminal connections and logic diagrams shall be as specified on figures 1 and 2.

3.3.2 Truth tables. The truth tables and logic equations shall be as specified on figure 3.

3.3.4 Schematic circuits. The schematic circuits shall be maintained by the manufacturer and made available to the qualifying activity and the preparing activity (DSCC-VAS) upon request.

3.3.5 Case outlines. The case outlines shall be as specified in 1.2.3.

3.4 Lead material and finish. The lead material and finish shall be in accordance with MIL-PRF-38535 (see 6.6).

3.5 Electrical performance characteristics. The electrical performance characteristics are as specified in table I, and apply over the full recommended case operating temperature range, unless otherwise specified.

3.6 Electrical test requirements. The electrical test requirements for each device class shall be the subgroups specified in table II. The electrical tests for each subgroup are described in table III.

3.7 Marking. Marking shall be in accordance with MIL-PRF-38535.

3.8 Microcircuit group assignment. The devices covered by this specification shall be in microcircuit group number 12 (see MIL-PRF-38535, appendix A).

4. VERIFICATION

4.1 Sampling and inspection. Sampling and inspection procedures shall be in accordance with MIL-PRF-38535 or as modified in the device manufacturer's Quality Management (QM) plan. The modification in the QM plan shall not effect the form, fit, or function as described herein.

4.2 Screening. Screening shall be in accordance with MIL-PRF-38535 and shall be conducted on all devices prior to qualification and quality conformance inspection. The following additional criteria shall apply:

a. The burn-in test duration, test condition, and test temperature, or approved alternatives shall be as specified in the device manufacturer's QM plan in accordance with MIL-PRF-38535. The burn-in test circuit shall be maintained under document control by the device manufacturer's Technology Review Board (TRB) in accordance with MIL-PRF-38535 and shall be made available to the acquiring or preparing activity upon request. The test circuit shall specify the inputs, outputs, biases, and power dissipation, as applicable, in accordance with the intent specified in test method 1015 of MIL-STD-883.

b. Interim and final electrical test parameters shall be as specified in table II, except interim electrical parameters test prior to burn-in is optional at the discretion of the manufacturer.

c. Additional screening for space level product shall be as specified in MIL-PRF-38535, appendix B.

TABLE I. Electrical performance characteristics.

Test	Symbol	Conditions $-55°C \leq T_C \leq +125°C$ unless otherwise specified	Device types	Limits		Unit
				Min	Max	
Low-level output voltage	V_{OL}	V_{CC} = 4.5 V, V_{IH} = 2.0 V V_{IL} = 0.7 V, I_{OL} = 4 mA 1/	All	-	0.4	V
High-level output voltage	V_{OH}	V_{CC} = 4.5 V, V_{IH} = 2.0 V V_{IL} = 0.7 V, I_{OH} = -400m µA	All	2.5	-	V
Input clamp voltage	V_{IC}	T_C = 25°C, V_{CC} = 4.5 V I_{IN} = -18 mA	All	-	-1.5	V
Low-level input current at reset inputs	I_{IL1}	V_{CC} = 5.5 V, V_{IN} = 0.4 V	01, 02, 10	-30	-400	µA
Low-level input current at input A	I_{IL2}		01, 02, 10	-0.5	-2.4	mA
Low-level input current at input B	I_{IL3}		01, 10	-0.4	-3.2	mA
			02	-0.4	-1.6	mA
Low-level input current at data, clear, EnP	I_{IL4}		03, 04	-30	-400	µA
Low-level input current at data, EnP	I_{IL4}		01, 12	-30	-400	µA
Low-level input current at clear	I_{IL4}		01, 12	-30	-760	µA
Low-level input current at load	I_{IL5}		03, 04, 11, 12	-30	-800	µA
Low-level input current at EnT	I_{IL5}		03, 04, 11, 12	-30	-860	µA
Low-level input current at clock	I_{IL6}		03, 04,	0	-.630	mA
			11, 12			
Low-level input current at EnG	I_{IL7}		09	-.15	-1.08	mA
			13	-.36	-1.08	
Low-level input current at data, clock, down/up	I_{IL8}		09, 13	-120	-400	µA
Low-level input current at load	I_{IL8}		09, 13	-100	-400	µA
Low-level input current at data	I_{IL9}		07, 08	-100	-400	µA
Low-level input current at load	I_{IL10}		07, 08	-100	-400	µA
Low-level input current at clear, count up, count down	I_{IL11}		07, 08	-120	-400	µA
Low-level input current at data	I_{IL12}		05, 06	-3.0	-400	µA
Low-level input current at clock, down/up	I_{IL13}		05, 06	-135	-370	µA
Low-level input current at EP	I_{IL14}		05, 06	-150	-385	µA
Low-level input current at ET	I_{IL15}		05, 06	-280	-760	µA

See footnotes at end of table.

TABLE I. Electrical performance characteristics.

Test	Symbol	Conditions $-55°C \leq T_C \leq +125°C$ unless otherwise specified	Device types	Limits		Unit
				Min	Max	
High-level input current at reset inputs	I_{IH1}	V_{CC} = 5.5 V, V_{IN} = 2.7 V	01, 02 10	-	20	µA
High-level input current at reset inputs	I_{IH2}	V_{CC} = 5.5 V, V_{IN} = 5.5 V	01, 02 10	-	100	µA
High-level input current at input A	I_{IH3}	V_{CC} = 5.5 V, V_{IN} = 2.7 V	01, 02 10	-	80	µA
High-level input current at input A	I_{IH4}	V_{CC} = 5.5 V, V_{IN} = 5.5 V	01, 02, 10	-	400	µA
High-level input current at input B	I_{IH5}	V_{CC} = 5.5 V, V_{IN} = 2.7 V	01	-	160	µA
			02, 10	-	80	
High-level input current at input B	I_{IH6}	V_{CC} = 5.5 V, V_{IN} = 5.5 V	01	-	800	µA
			02, 10	-	400	
High-level input current at load, clock, EnT	I_{IH9}	V_{CC} = 5.5 V, V_{IN} = 2.7 V	03, 04, 11, 12	-	40	µA
High-level input current at load, clock, EnT	I_{IH10}	V_{CC} = 5.5 V, V_{IN} = 5.5 V	03, 04, 11, 12	-	200	µA
High-level input current at data, EnP	I_{IH11}	V_{CC} = 5.5 V, V_{IN} = 2.7 V	03, 04, 11, 12	-	20	µA
High-level input current at data, EnP	I_{IH12}	V_{CC} = 5.5 V, V_{IN} = 5.5 V	03, 04, 11, 12	-	100	µA
High-level input current at clear	I_{IH13}	V_{CC} = 5.5 V, V_{IN} = 2.7 V	03, 04,	-	20	µA
			11, 12	-	40	
High-level input current at clear	I_{IH14}	V_{CC} = 5.5 V, V_{IN} = 5.5 V	03, 04	-	100	µA
			11, 12	-	200	
High-level input current at EnG	I_{IH15}	V_{CC} = 5.5 V, V_{IN} = 2.7 V	09, 13	-	60	µA
High-level input current at EnG	I_{IH16}	V_{CC} = 5.5 V, V_{IN} = 5.5 V	09, 13	-	300	µA
High-level input current at data, load, clear, count up, count down, clock, down/up	I_{IH17}	V_{CC} = 5.5 V, V_{IN} = 2.7 V	05, 06 07, 08 09, 13	-	20	µA
High-level input current at data, load, clear, count up, count down, clock, down/up	I_{IH18}	V_{CC} = 5.5 V, V_{IN} = 5.5 V	05, 06 07, 08 09, 13	-	100	µA
High-level input current at ET	I_{IH19}	V_{CC} = 5.5 V, V_{IN} = 2.7 V	05, 06	-	40	µA

See footnotes at end of table.

TABLE I. Electrical performance characteristics - Continued.

Test	Symbol	Conditions $-55°C \le T_C \le +125°C$ unless otherwise specified	Device types	Limits		Unit
				Min	Max	
High-level input current at ET	I_{IH20}	V_{CC} = 5.5 V, V_{IN} = 5.5 V	05, 06	-	200	µA
Short circuit output current	I_{OS}	V_{CC} = 5.5 V 2/	All	-15	-130	mA
Supply current	I_{CC}	V_{CC} = 5.5 V	01,02,10		15	mA
			05,06,07,08		34	
			09, 13		35	
High-level supply current	I_{CCH}	V_{CC} = 5.5 V, 3/	03, 04, 11, 12	-	31	mA
High-level supply current	I_{CCH}	V_{CC} = 5.5 V, 3/	03, 04 11, 12	-	31	mA
Low-level supply current	I_{CCL}	V_{CC} = 5.5 V, 4/	03, 04 11, 12	-	32	mA
Maximum input A, clock, or count up frequency	F_{MAX}	V_{CC} = 5.0 V, C_L = 50 pF, ±10% R_L = 2 kΩ	05, 06 01, 02, 10	25 29	-	MHz
			03, 04, 07, 08, 11, 12	22		
			09, 13	18	-	
Propagation delay time, high to low, A to Q_C	t_{PHL1}		01,02,10	3	81	ns
Propagation delay time, low to high, A to Q_C	t_{PLH1}		01, 10	3	74	ns
			02	3	74	
Propagation delay time, high to low, B to Q_D	t_{PHL2}		01, 10	3	56	ns
			02	3	78	
Propagation delay time, low to high, B to Q_D	t_{PLH2}		01, 10	3	52	ns
			02	3	78	
Propagation delay time, low to high, clock to carry	t_{PLH4}		03, 04, 11, 12	3	56	ns
Propagation delay time, high to low, clock to carry	t_{PHL4}		03, 04, 11, 12	3	56	ns

See footnotes at end of table.

TABLE I. Electrical performance characteristics - Continued.

Test	Symbol	Conditions $-55°C \le T_C \le +125°C$ unless otherwise specified	Device types	Limits		Unit
				Min	Max	
Propagation delay time, low to high, clock to Q	t_{PLH5}	V_{CC} = 5.0 V, C_L = 50 pF, ±10% R_L = 2 kΩ	03, 04, 11, 12	3	41	ns
Propagation delay time, high to high, clock to Q	t_{PHL5}		03, 04, 11, 12	3	45	ns
Propagation delay time, low to high, clock to Q	t_{PLH5}		05, 06	3	26	ns
Propagation delay time, high to low, clock to Q	t_{PHL5}		05	3	26	ns
			06	3	36	
Propagation delay time, low to high, clock (data) to Q	t_{PLH6}		03, 04, 11, 12	3	42	ns
Propagation delay time, high to low, clock (data) to Q	t_{PHL6}		03, 04, 11, 12	3	48	ns
Propagation delay time, low to high, EnT to carry	t_{PLH7}		03, 04, 11, 12	3	28	ns
Propagation delay time, high to low, EnT to carry	t_{PHL7}		03, 04, 11, 12	3	28	ns
Propagation delay time, low to high, ET to RC	t_{PLH7}		05	3	18	ns
			06	3	28	
Propagation delay time, high to low, ET to RC	t_{PHL7}		05	3	28	ns
			06	3	32	
Propagation delay time, high to low, clear to Q	t_{PHL8}		03, 04, 11, 12	3	46	ns
Propagation delay time, low to high, load to Q	t_{PLH8}		07, 08	3	63	ns
Propagation delay time, high to low, load to Q	t_{PHL10}		07, 08	3	63	ns
Propagation delay time, low to high, counts up and down to Q, U/$\overline{D}$ to RC	t_{PLH9}		07, 08	3	60	ns
			05	3	26	
			06	3	32	

TABLE I. Electrical performance characteristics - Continued.

Test	Symbol	Conditions $-55°C \leq T_C \leq +125°C$ unless otherwise specified	Device types	Limits		Unit
				Min	Max	
Propagation delay time, high to low, counts up and down to Q, U/$\overline{D}$ to RC	t_{PHL11}	V_{CC} = 5.0 V, C_L = 50 pF, ±10% R_L = 2 kΩ	07, 08	3	73	ns
			05	3	33	
			06	3	37	
Propagation delay time, high to low, clear to Q	t_{PHL12}		07, 08	3	56	ns
Propagation delay time, low to high, load to Q	t_{PLH10}		09, 13	3	53	ns
Propagation delay time, high to low, load to Q	t_{PHL13}		09, 13	3	77	ns
Propagation delay time, low to high, clock to Q	t_{PLH11}		09, 13	3	41	ns
Propagation delay time, high to low, clock to Q	t_{PHL14}		09, 13	3	57	ns
Propagation delay time, low to high, clock to Max Min	t_{PLH12}		09, 13	3	66	ns
Propagation delay time, low to high, clock to ripple carry	t_{PLH12}		05	3	35	ns
			06	3	38	
Propagation delay time, high to low, clock to Max Min	t_{PHL15}		09, 13	3	80	ns
Propagation delay time, high to low, clock to ripple carry	t_{PHL15}		05	3	37	ns
			06	3	40	

1/ Use $I_{OL} + I_{IL3(Max)}$ for V_{OL} test on Q_A.

2/ Not more than one output should be shorted at a time.

3/ I_{CCH} is measured : (a) With the load input high; and (b) Then again with the load input low with all other inputs high and all outputs open.

4/ I_{CCL} is measured: (a) With the clock input high; and (b) Then again with the clock input low with all other inputs low and all outputs open.

TABLE II. Electrical test requirements.

MIL-PRF-38535 test requirements	Subgroups (see table III)	
	Class S devices	Class B devices
Interim electrical parameters	1	1
Final electrical test parameters	1*, 2, 3, 7, 9, 10, 11	1*, 2, 3, 7, 9
Group A test requirements	1, 2, 3, 7, 8, 9, 10, 11	1, 2, 3, 7, 8, 9, 10, 11
Group B test when using the method 5005 QCI option	1, 2, 3, 7 8, 9, 10, 11	N/A
Group C end-point electrical parameters	1, 2, 3, 7, 8 9, 10, 11	1, 2, 3
Group D end-point electrical parameters	1, 2, 3	1, 2, 3

*PDA applies to subgroup 1.

4.3 Qualification inspection. Qualification inspection shall be in accordance with MIL-PRF-38535 .

4.4 Technology Conformance inspection (TCI). Technology conformance inspection shall be in accordance with MIL-PRF-38535 and herein for groups A, B, C, and D inspections (see 4.4.1 through 4.4.4).

4.4.1 Group A inspection. Group A inspection shall be in accordance with table III of MIL-PRF-38535 and as follows:

a. Tests shall be as specified in table II herein.

b. Subgroups 4, 5, and 6 shall be omitted.

4.4.2 Group B inspection. Group B inspection shall be in accordance with table II MIL-PRF-38535.

4.4.3 Group C inspection. Group C inspection shall be in accordance with table IV of MIL-PRF-38535 and as follows:

a. End-point electrical parameters shall be as specified in table II herein.

b. The steady-state life test duration, test condition, and test temperature, or approved alternatives shall be as specified in the device manufacturer's QM plan in accordance with MIL-PRF-38535. The burn-in test circuit shall be maintained under document control by the device manufacturer's Technology Review Board (TRB) in accordance with MIL-PRF-38535 and shall be made available to the acquiring or preparing activity upon request. The test circuit shall specify the inputs, outputs, biases, and power dissipation, as applicable, in accordance with the intent specified in test method 1005 of MIL-STD-883.

4.4.4 Group D inspection. Group D inspection shall be in accordance with table V of MIL-PRF-38535. End-point electrical parameters shall be as specified in table II herein.

4.5 Methods of inspection. Methods of inspection shall be specified and as follows:

4.5.1 Voltage and current. All voltages given are referenced to the microcircuit ground terminal. Currents given are conventional and positive when flowing into the referenced terminal.

Pin number	Device type 01		Device type 02		Device type 03		Device type 04	
	CASES							
	A, B, C, and D	2	A, B, C, and D	2	E,F	2	E,F	2
1	BD INPUT	N/C	INPUT B	N/C	CLEAR	N/C	CLEAR	N/C
2	$R_O^{(1)}$	BD INPUT	$R_{O(1)}$	INPUT B	CLOCK	CLEAR	CLOCK	CLEAR
3	$R_O^{(2)}$	$R_O^{(1)}$	$R_{O(2)}$	$R_O^{(1)}$	INPUT A	CLOCK	INPUT A	CLOCK
4	NC	$R_O^{(2)}$	NC	$R_O^{(2)}$	INPUT B	INPUT A	INPUT B	INPUT A
5	V_{CC}	N/C	V_{CC}	N/C	INPUT C	INPUT B	INPUT C	INPUT B
6	$R_{9(1)}$	N/C	NC	N/C	INPUT D	N/C	INPUT D	N/C
7	$R_{9(2)}$	N/C	NC	N/C	ENABLE P	INPUT C	ENABLE P	INPUT C
8	OUTPUT C	V_{CC}	OUTPUT C	V_{CC}	GND	INPUT D	GND	INPUT D
9	OUTPUT B	$R_9^{(1)}$	OUTPUT B	N/C	LOAD	ENABLE P	LOAD	ENABLE P
10	GND	$R_9^{(2)}$	GND	N/C	ENABLE T	GND	ENABLE T	GND
11	OUTPUT D	N/C	OUTPUT D	N/C	Q_D	N/C	Q_D	N/C
12	OUTPUT A	OUTPUT C	OUTPUT A	OUTPUT C	Q_C	LOAD	Q_C	LOAD
13	NC	OUTPUT B	NC	OUTPUT B	Q_B	T	Q_B	T
14	INPUT A	GND	INPUT A	GND	Q_A	Q_D	Q_A	Q_D
15		N/C		N/C	CARRY OUTPUT	Q_C	CARRY OUTPUT	Q_C
16		OUTPUT D		OUTPUT D	V_{CC}	N/C	V_{CC}	N/C
17		N/C		N/C		Q_B		Q_B
18		OUTPUT A		OUTPUT A		Q_A		Q_A
19		N/C		N/C		CARRY OUTPUT		CARRY OUTPUT
20		INPUT A		INPUT A		V_{CC}		V_{CC}

FIGURE 1. Terminal connections.

Pin number	Device type 05		Device type 06		Device type 07		Device type 08	
	CASES							
	E, F	2	E, F	2	E, F	2	E, F	2
1	$U/\overline{D}$	N/C	$U/\overline{D}$	N/C	DATA B INPUT	N/C	DATA B INPUT	N/C
2	CK	$U/\overline{D}$	CK	$U/\overline{D}$	Q_B	DATA B INPUT	Q_B	DATA B INPUT
3	INPUT A	CK	INPUT A	CK	Q_A	Q_B	Q_A	Q_B
4	INPUT B	INPUT A	INPUT B	INPUT A	COUNT DOWN	Q_A	COUNT DOWN	Q_A
5	INPUT C	INPUT B	INPUT C	INPUT B	COUNT UP	COUNT DOWN	COUNT UP	COUNT DOWN
6	INPUT D	N/C	INPUT D	N/C	Q_C	N/C	Q_C	N/C
7	ENABLE P	INPUT C	ENABLE P	INPUT C	Q_D	COUNT UP	Q_D	COUNT UP
8	GND	INPUT D	GND	INPUT D	GND	Q_C	GND	Q_C
9	LOAD	ENABLE P	LOAD	ENABLE P	DATA D	Q_D	DATA D	Q_D
10	ENABLE T	GND	ENABLE T	GND	DATA C	GND	DATA C	GND
11	Q_D	N/C	Q_D	N/C	LOAD	N/C	LOAD	N/C
12	Q_C	LOAD	Q_C	LOAD	CARRY	DATA D	CARRY	DATA D
13	Q_B	ENABLE T	Q_B	ENABLE T	BORROW	DATA C	BORROW	DATA C
14	Q_A	Q_D	Q_A	Q_D	CLEAR	LOAD	CLEAR	LOAD
15	RIPPLE CARRY OUTPUT	Q_C	RIPPLE CARRY OUTPUT	Q_C	DATA A	CARRY	DATA A	CARRY
16	V_{CC}	N/C	V_{CC}	N/C	V_{CC}	N/C	V_{CC}	N/C
17		Q_B		Q_B		BORROW		BORROW
18		Q_A		Q_A		CLEAR		CLEAR
19		RC OUTPUT		RC OUTPUT		DATA A		DATA A
20		V_{CC}		V_{CC}		V_{CC}		V_{CC}

FIGURE 1. Terminal connections - Continued.

Pin number	Device type 09		Device type 10		Device type 11		Device type 12	
	CASES							
	E, F	2	A,B C, and D	2	E, F	2	E, F	2
1	DATA B	N/C	INPUT BC	N/C	CLEAR	N/C	CLEAR	N/C
2	Q_B	DATA B	NC	INPUT BC	CLOCK	CLEAR	CLOCK	CLEAR
3	Q_A	Q_B	NC	N/C	INPUT A	CLOCK	INPUT A	CLOCK
4	ENABLE G	Q_A	NC	N/C	INPUT B	INPUT A	INPUT B	INPUT A
5	DOWN UP	ENABLE G	V_{CC}	N/C	INPUT C	INPUT B	INPUT C	INPUT B
6	Q_C	N/C	$R_{O(1)}$	N/C	INPUT D	N/C	INPUT D	N/C
7	Q_D	DOWN UP	$R_{O(2)}$	N/C	ENABLE P	INPUT C	ENABLE P	INPUT C
8	GND	Q_C	OUTPUT D	V_{CC}	GND	INPUT D	GND	INPUT D
9	DATA D	Q_D	OUTPUT C	R_O (1)	LOAD	ENABLE P	LOAD	ENABLE P
10	DATA C	GND	GND	R_O (2)	ENABLE T	GND	ENABLE T	GND
11	LOAD	N/C	OUTPUT B	N/C	Q_D	N/C	Q_D	N/C
12	MAX/ MIN	DATA D	OUTPUT A	OUTPUT D	Q_C	LOAD	Q_C	LOAD
13	RIPPLE CLOCK	DATA C	NC	OUTPUT C	Q_B	T	Q_B	T
14	CLOCK	LOAD	INPUT A	GND	Q_A	Q_D	Q_A	Q_D
15	DATA A	MAX/ MIN		N/C	CARRY OUTPUT	Q_C	CARRY OUTPUT	Q_C
16	V_{CC}	N/C		OUTPUT B	V_{CC}	N/C	V_{CC}	N/C
17		R_C		N/C		Q_B		Q_B
18		CLOCK		OUTPUT A		Q_A		Q_A
19		DATA A		N/C		CARRY OUTPUT		CARRY OUTPUT
20		V_{CC}		INPUT A		V_{CC}		V_{CC}

FIGURE 1. Terminal connections - Continued.

Pin number	Device type 13	
	CASES	
	E, F	2
1	DATA B	N/C
2	Q_B	DATA B
3	Q_A	Q_B
4	ENABLE G	Q_A
5	DOWN UP	ENABLE G
6	Q_C	N/C
7	Q_D	DOWN UP
8	GND	Q_C
9	DATA D	Q_D
10	DATA C	GND
11	LOAD	N/C
12	MAX/ MIN	DATA D
13	RIPPLE CLOCK	DATA C
14	CLOCK	LOAD
15	DATA A	MAX/ MIN
16	V_{CC}	N/C
17		R_C
18		CLOCK
19		DATA A
20		V_{CC}

FIGURE 1. Terminal connections - Continued

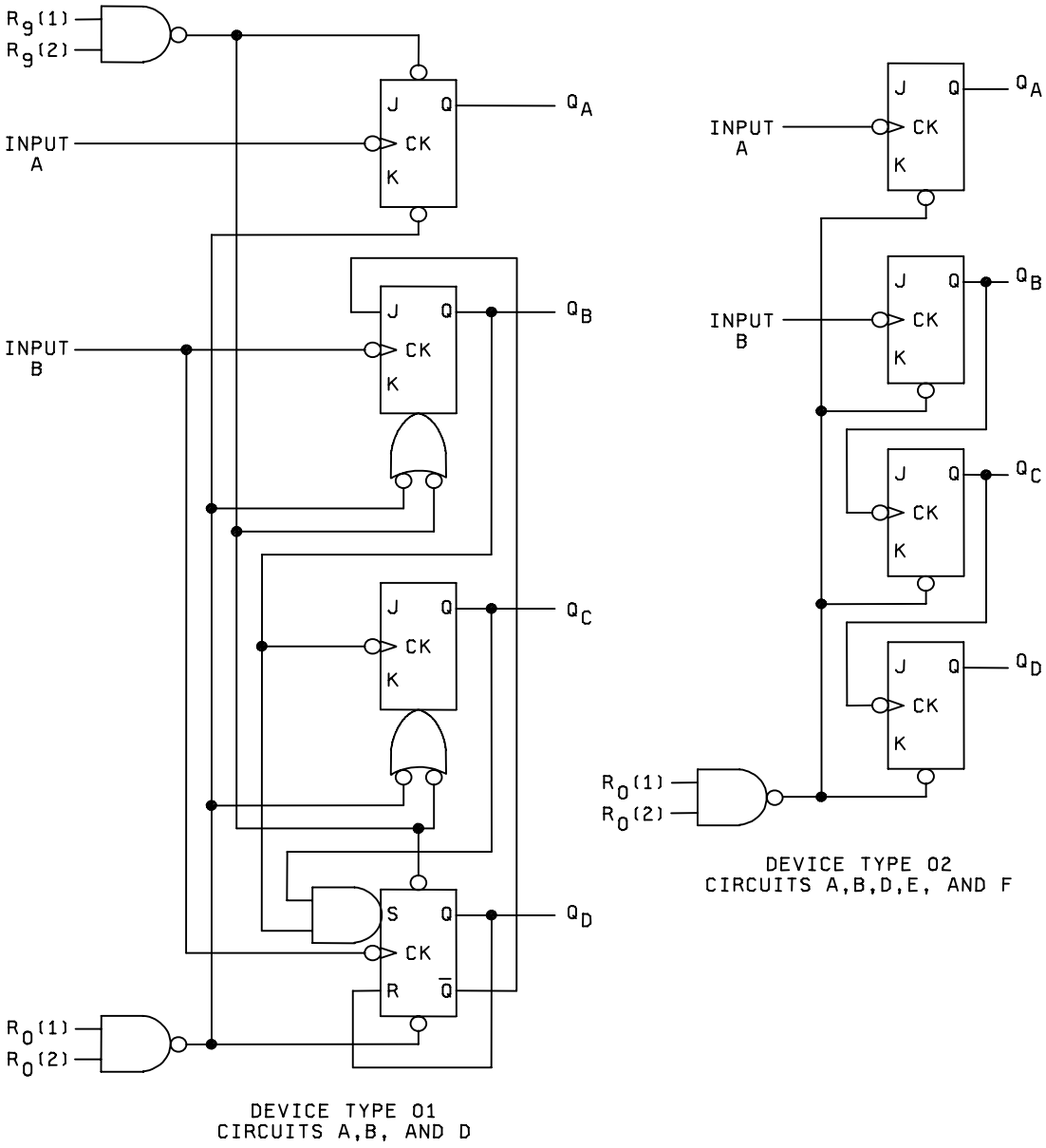

FIGURE 2. Logic diagrams

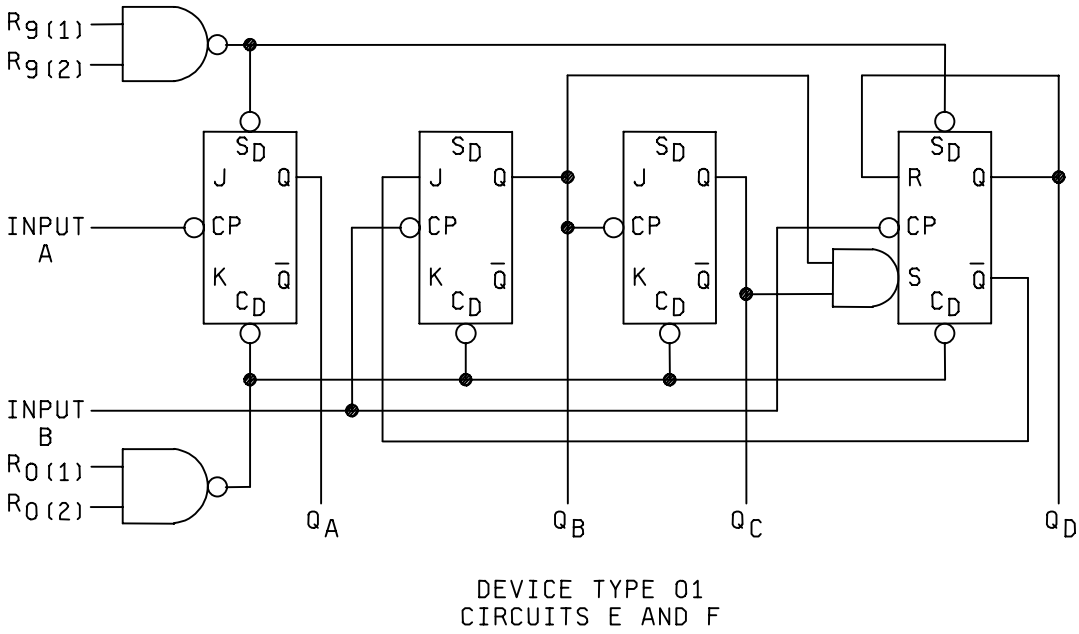

FIGURE 2. Logic diagrams – Continued.

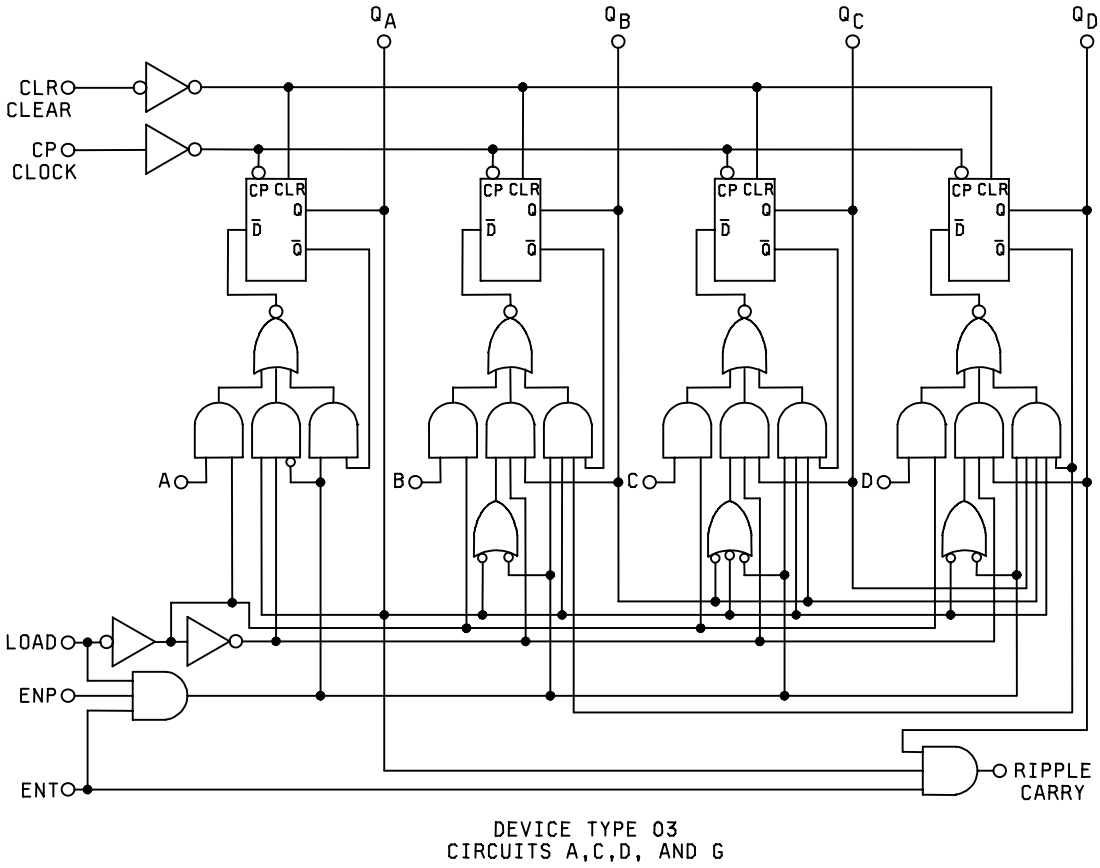

DEVICE TYPE 03
CIRCUITS A,C,D, AND G

FIGURE 2. Logic diagrams – Continued.

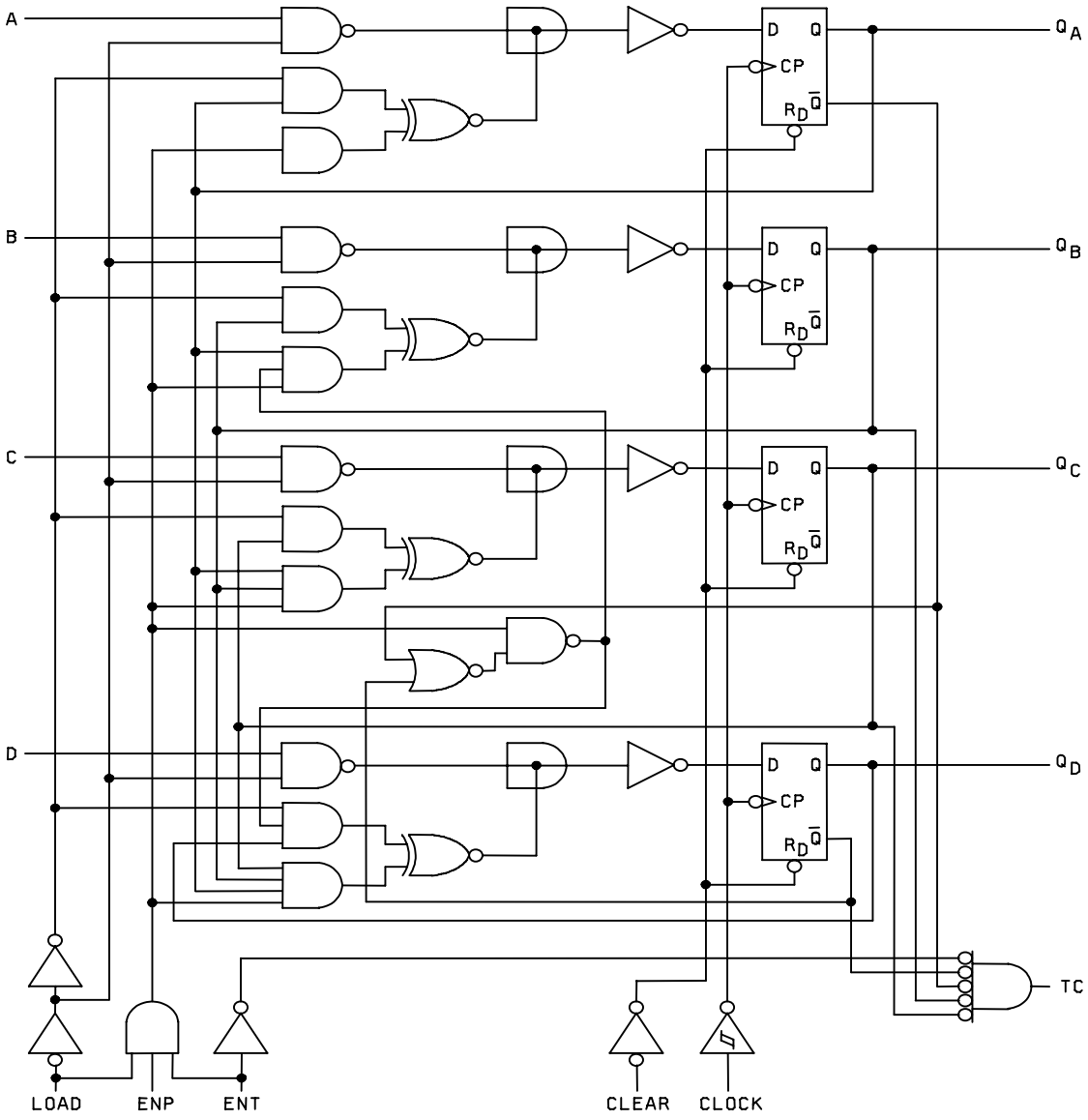

FIGURE 2. Logic diagrams – Continued.

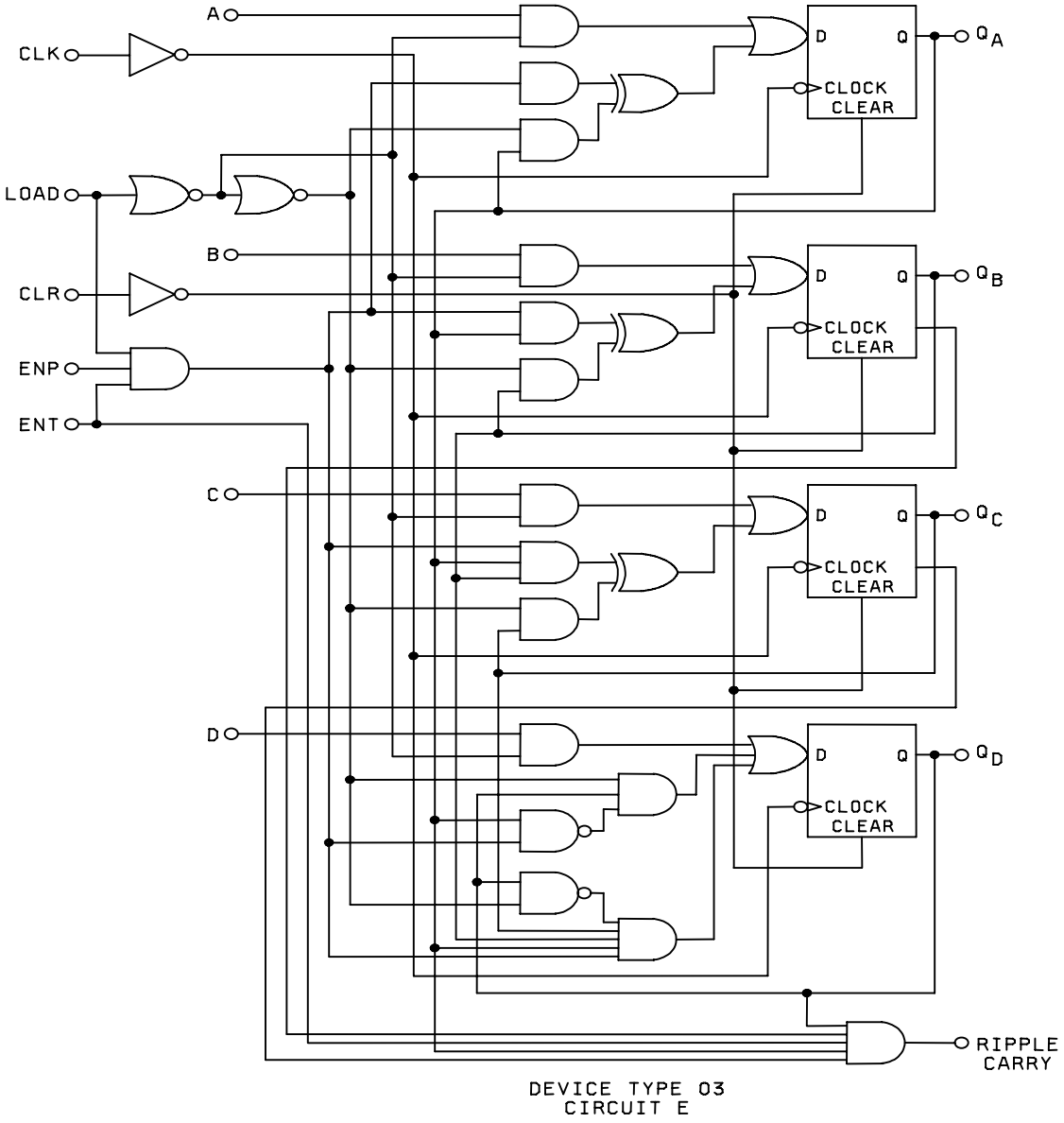

FIGURE 2. Logic diagrams – Continued.

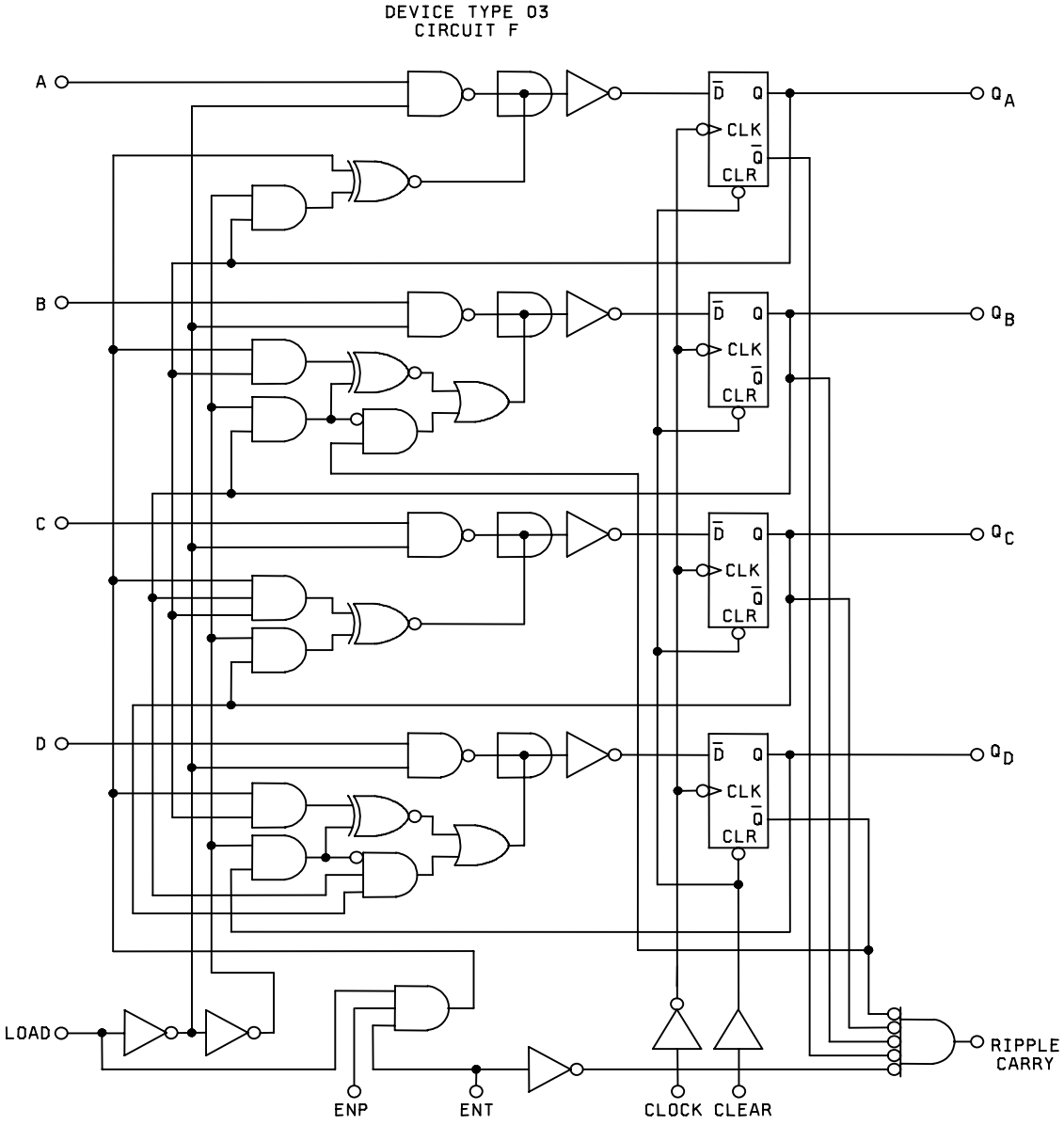

FIGURE 2. Logic diagrams – Continued.

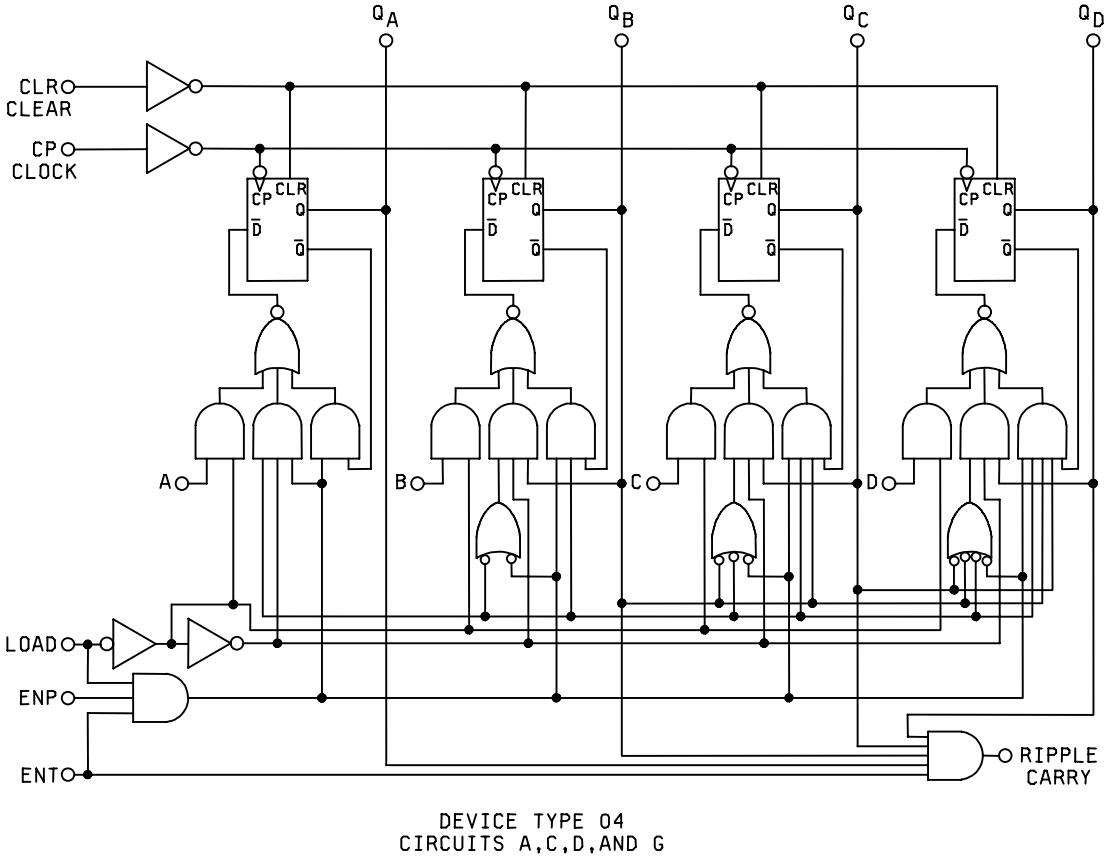

DEVICE TYPE 04
CIRCUITS A,C,D,AND G

FIGURE 2. Logic diagrams – Continued.

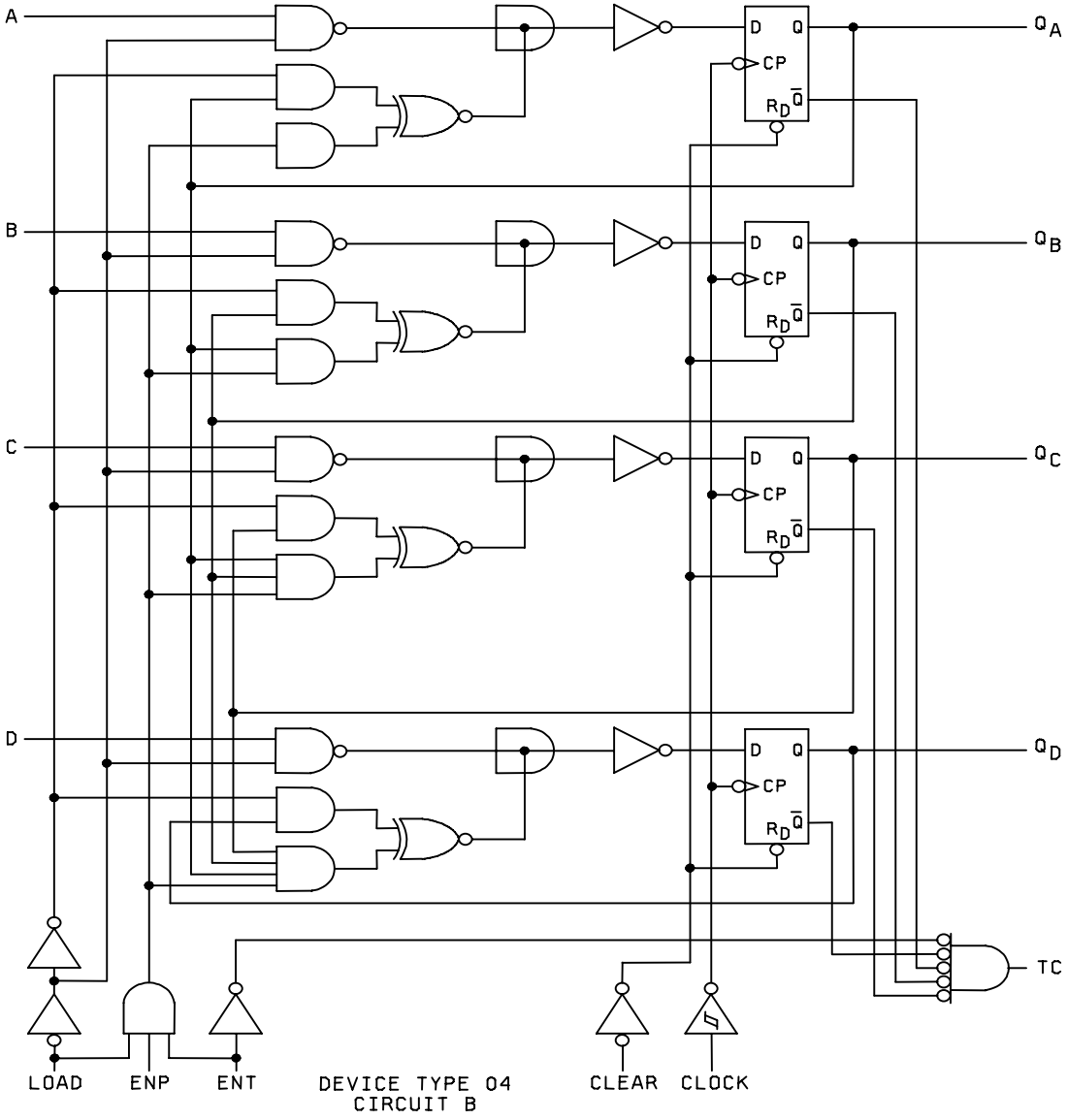

FIGURE 2. Logic diagrams – Continued.

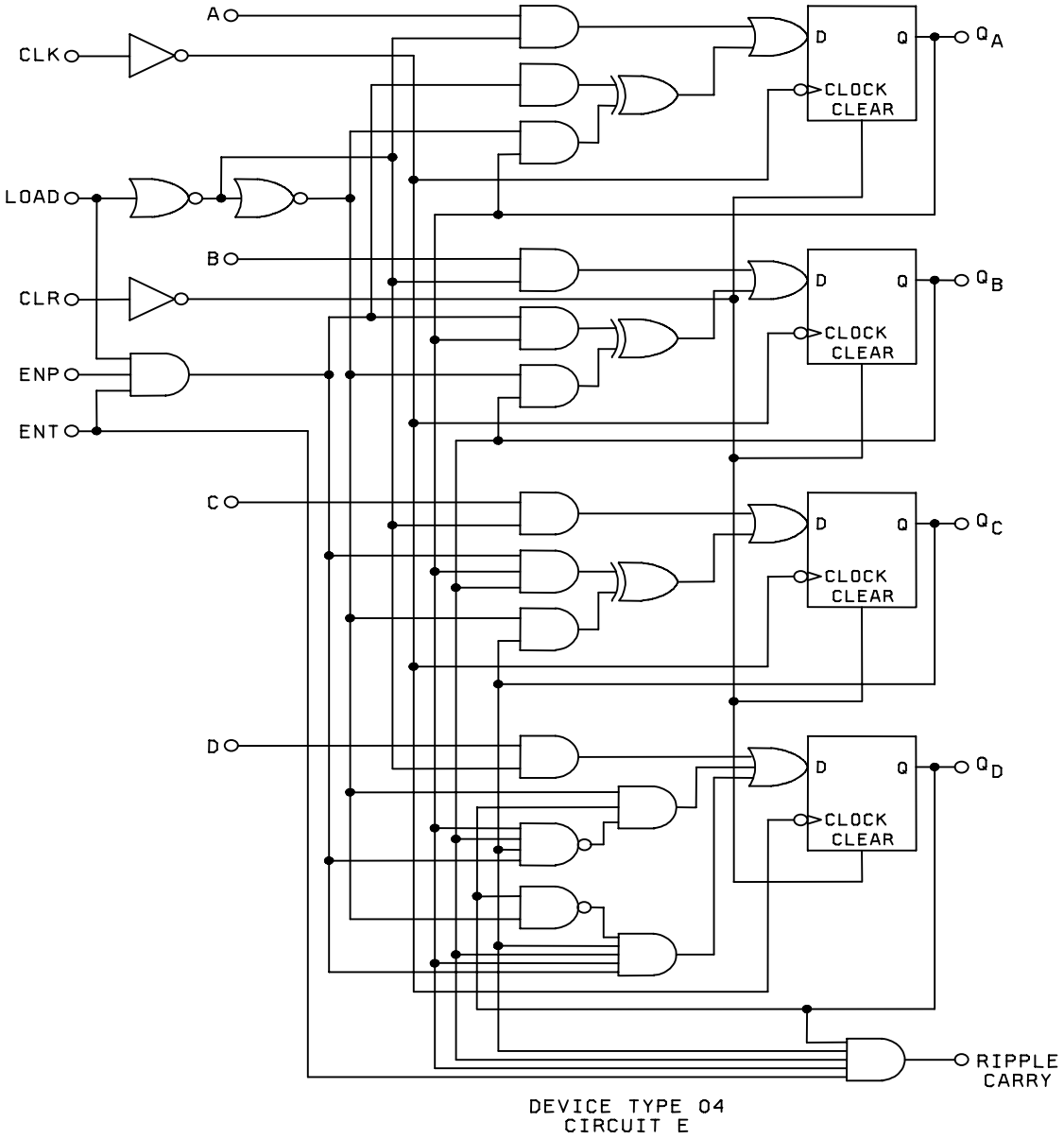

FIGURE 2. Logic diagrams – Continued.

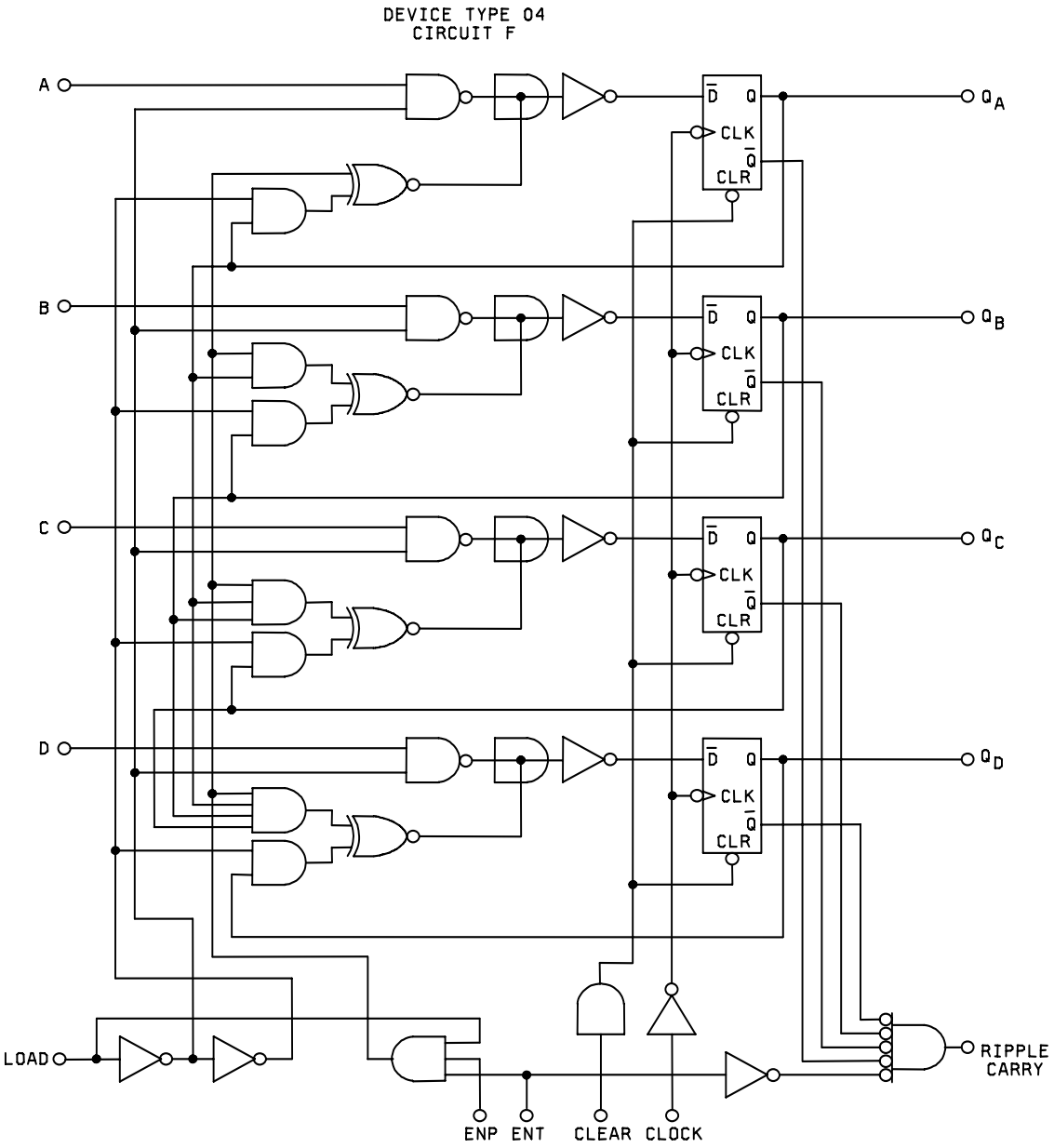

FIGURE 2. Logic diagrams – Continued.

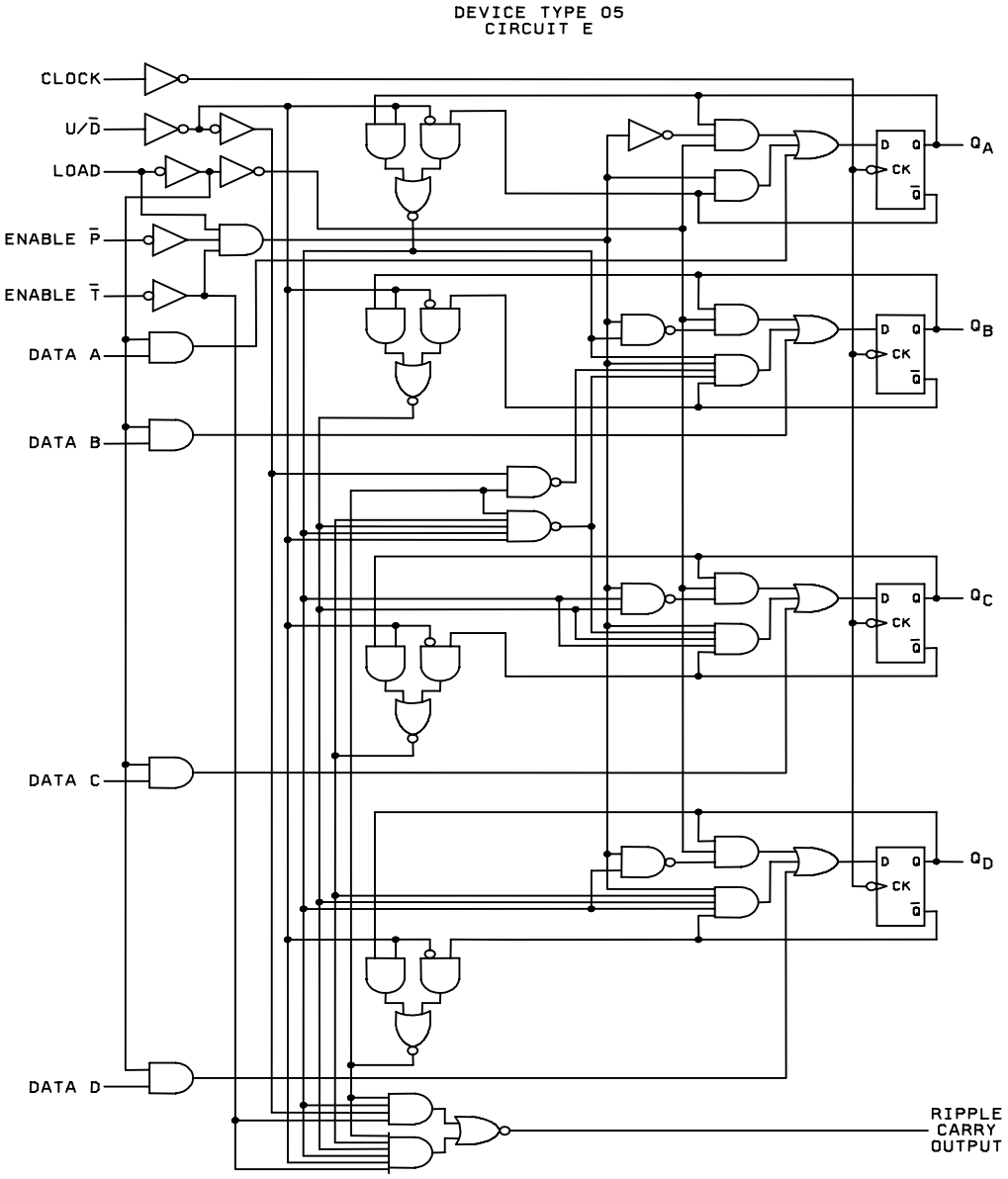

FIGURE 2. Logic diagrams – Continued.

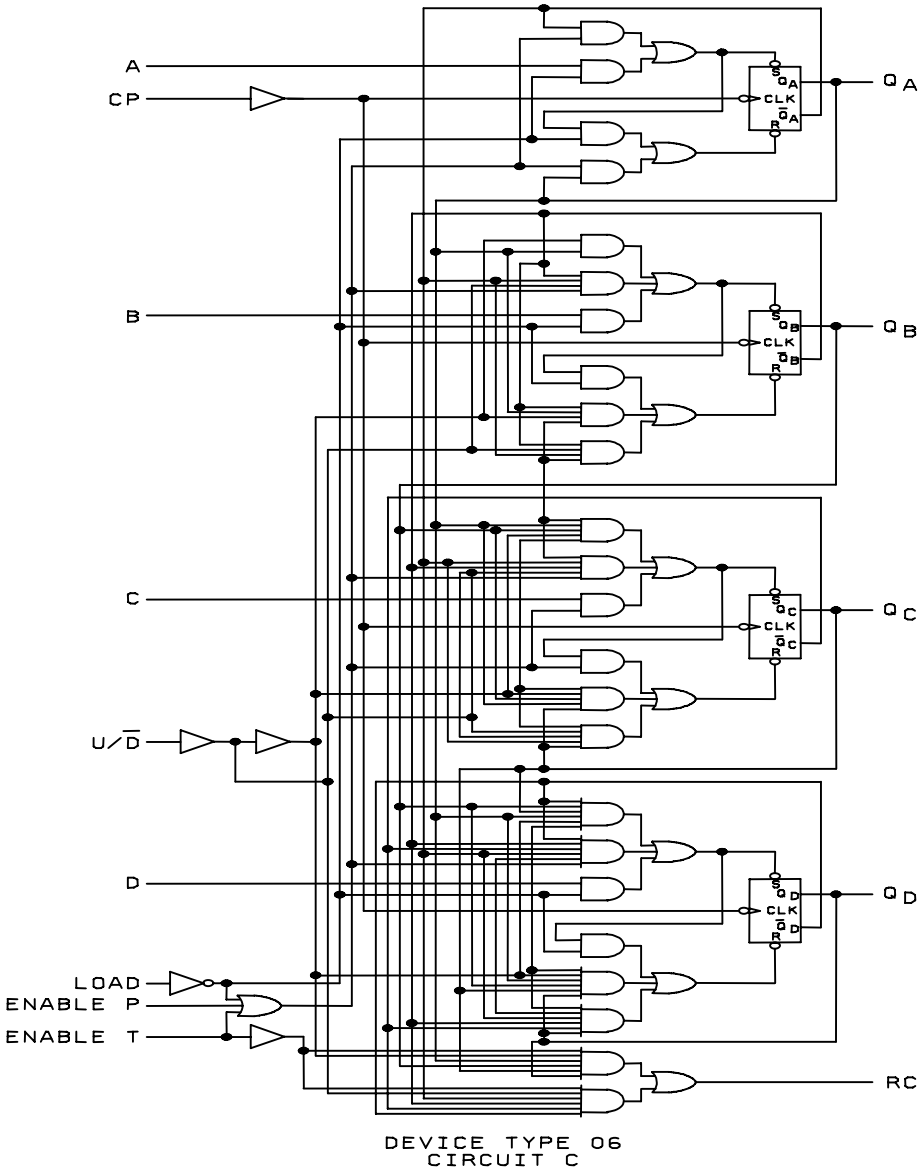

FIGURE 2. Logic diagrams – Continued.

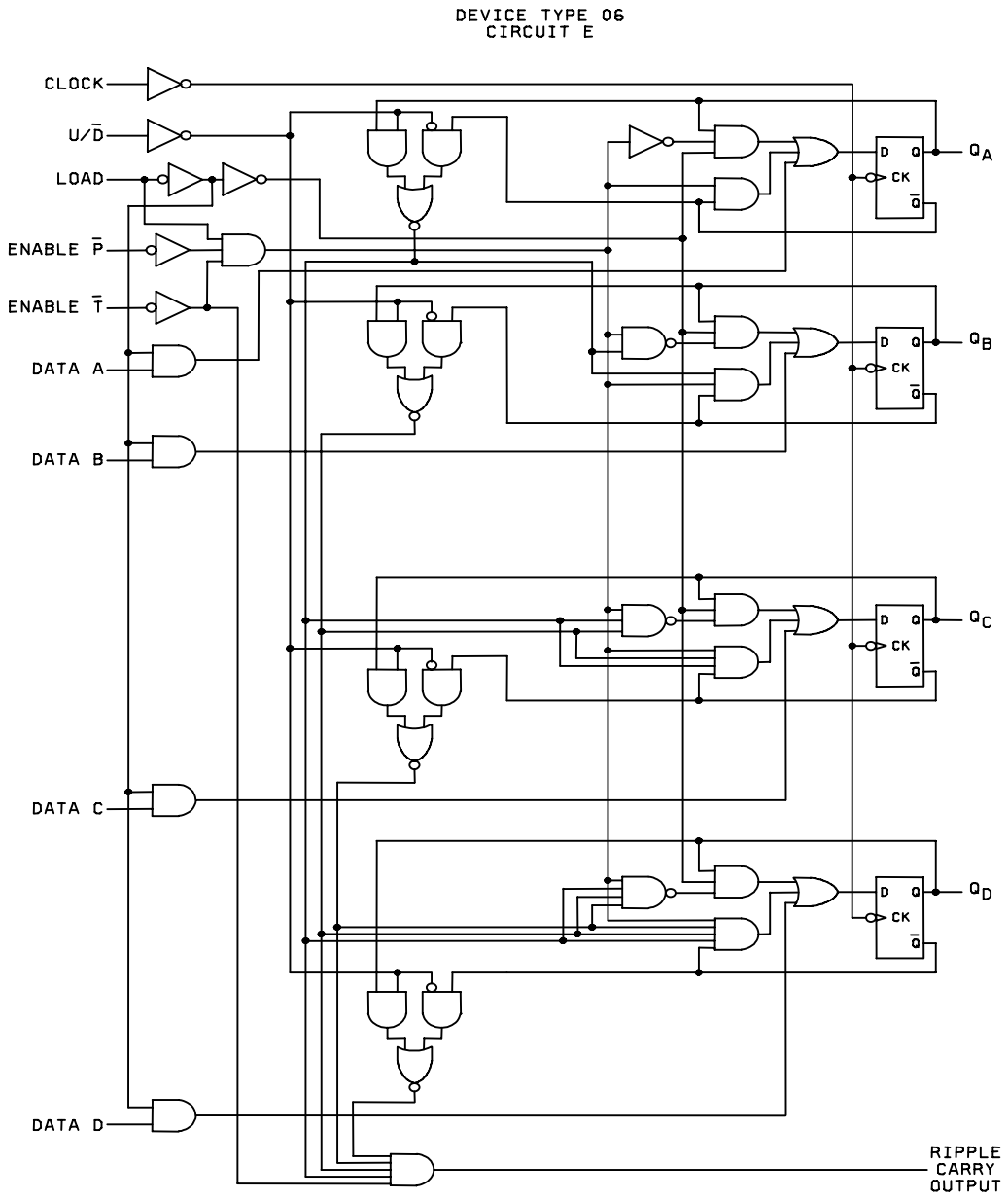

FIGURE 2. Logic diagrams – Continued.

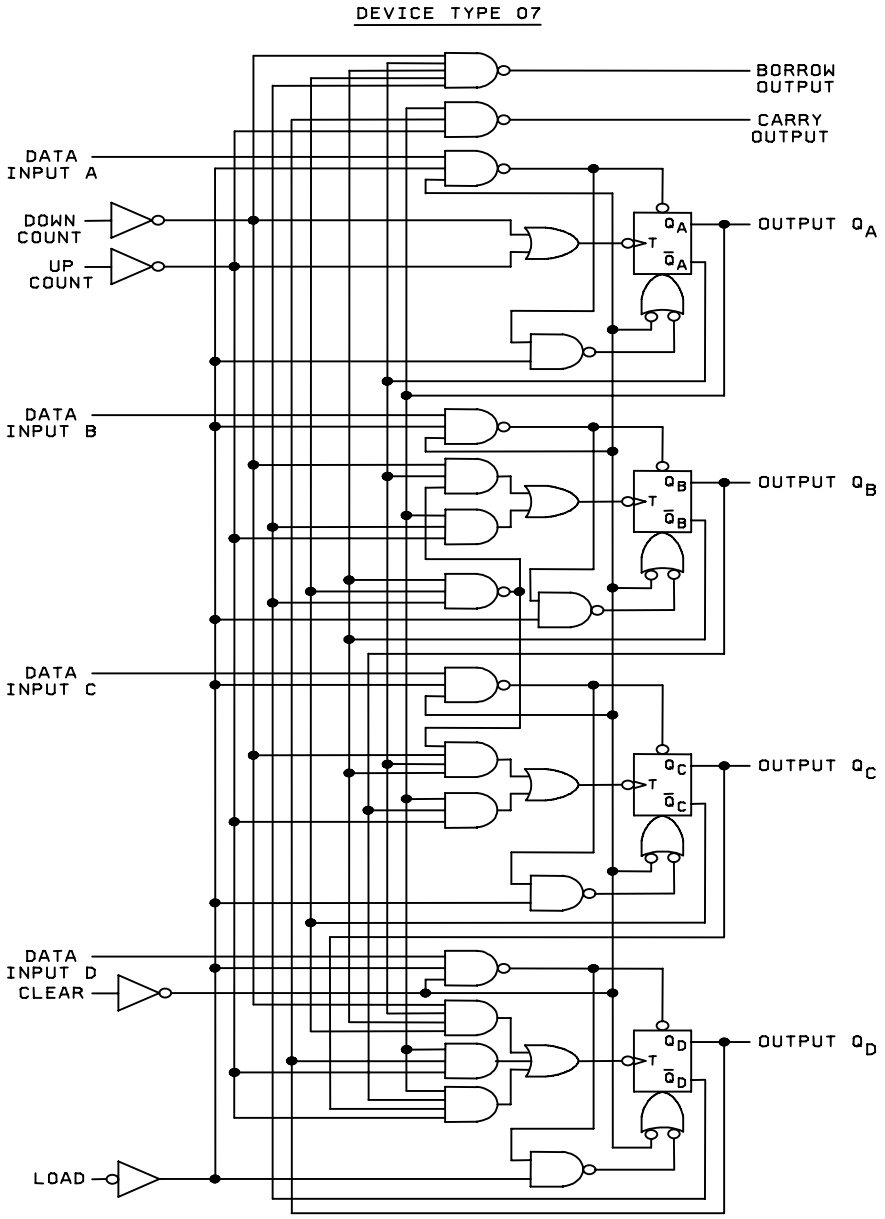

FIGURE 2. Logic diagrams – Continued.

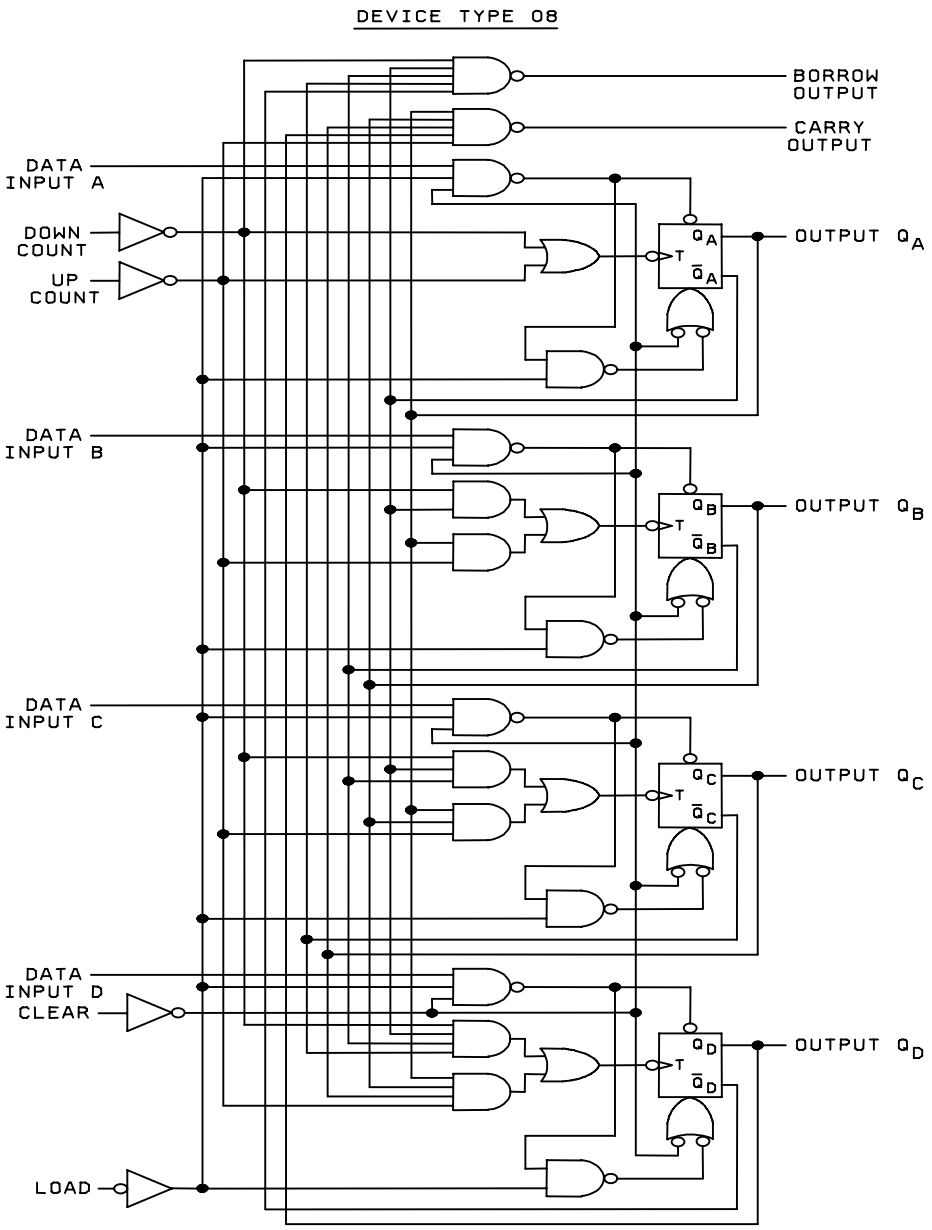

FIGURE 2. Logic diagrams – Continued.

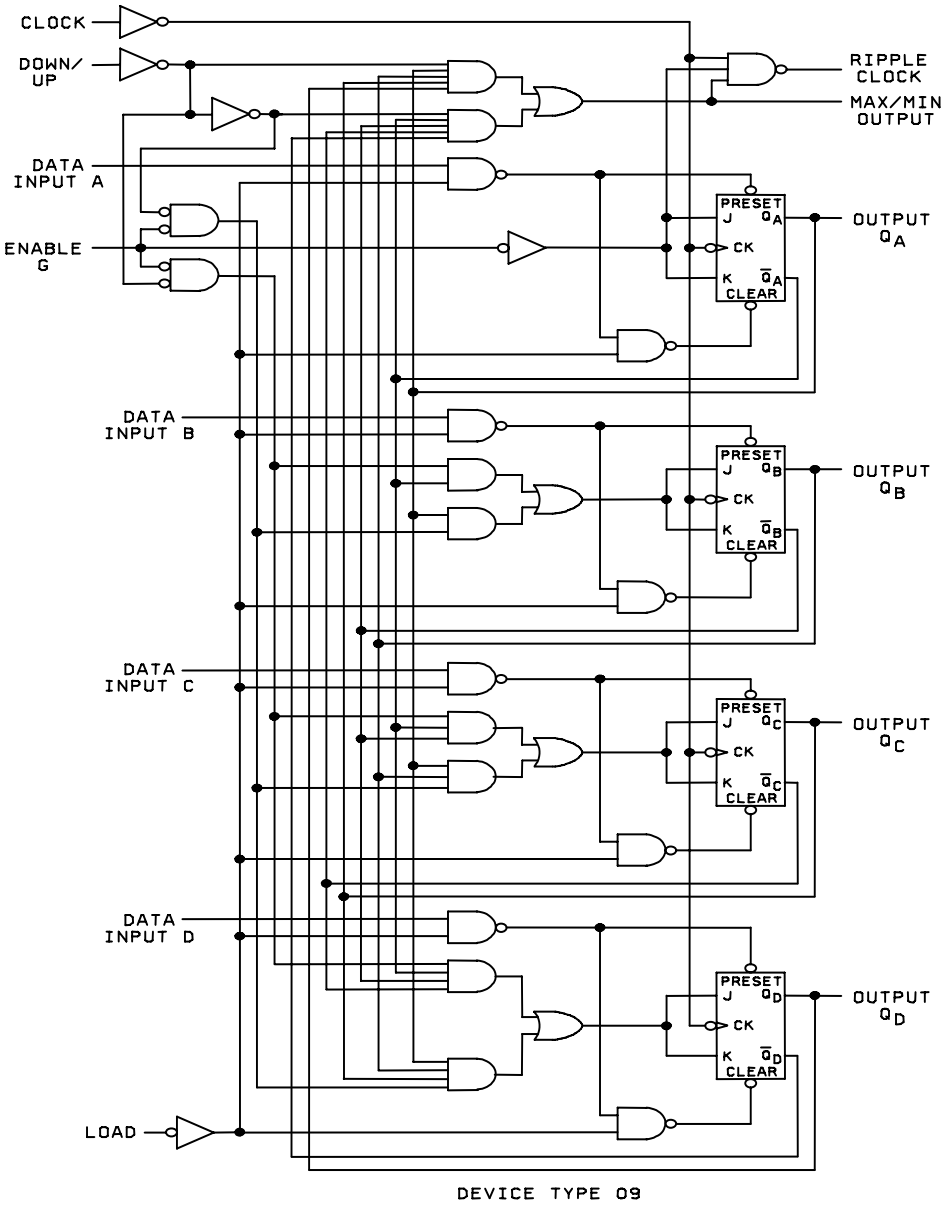

FIGURE 2. Logic diagrams – Continued.

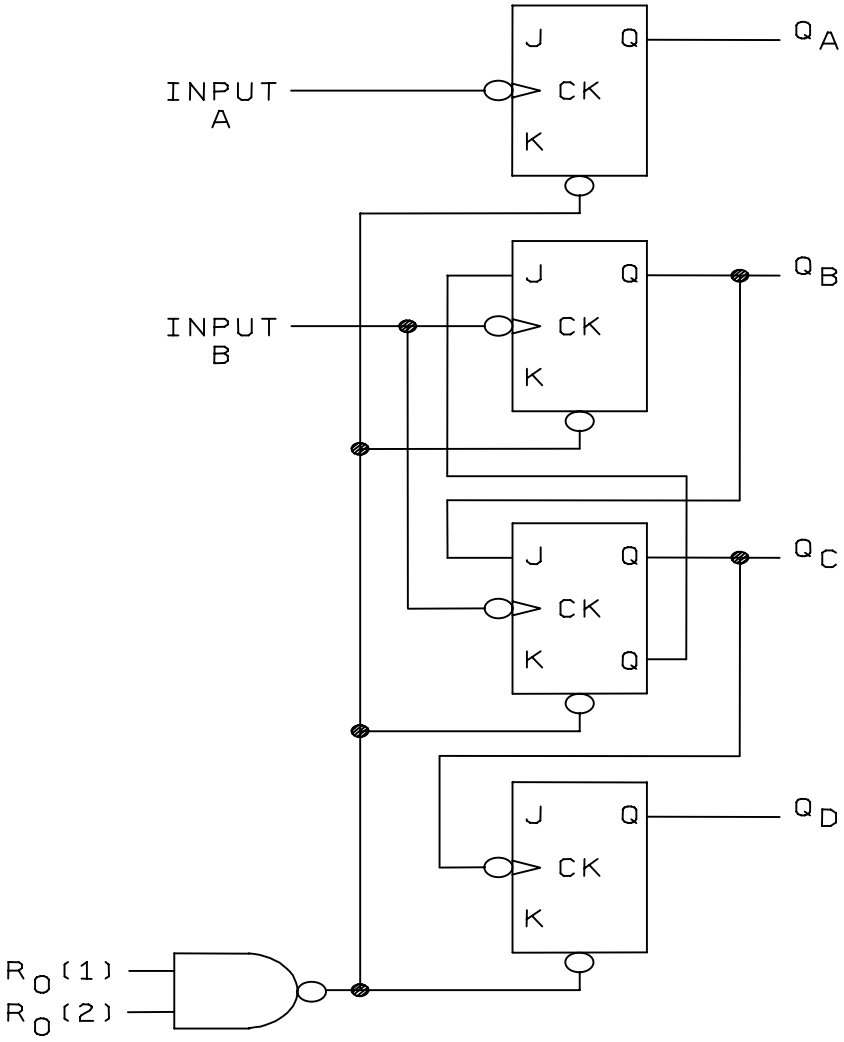

FIGURE 2. Logic diagrams – Continued.

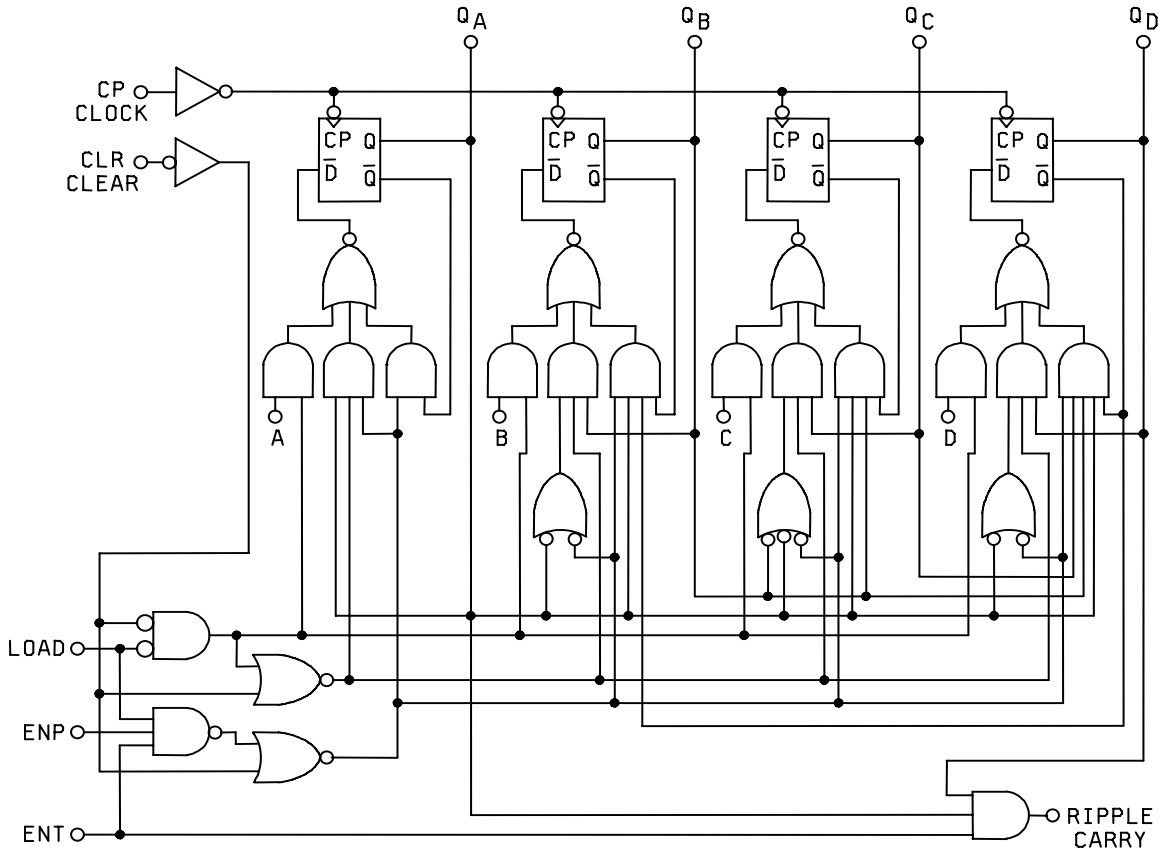

DEVICE TYPE 11
CIRCUITS A,C,D, AND G

FIGURE 2. Logic diagrams – Continued.

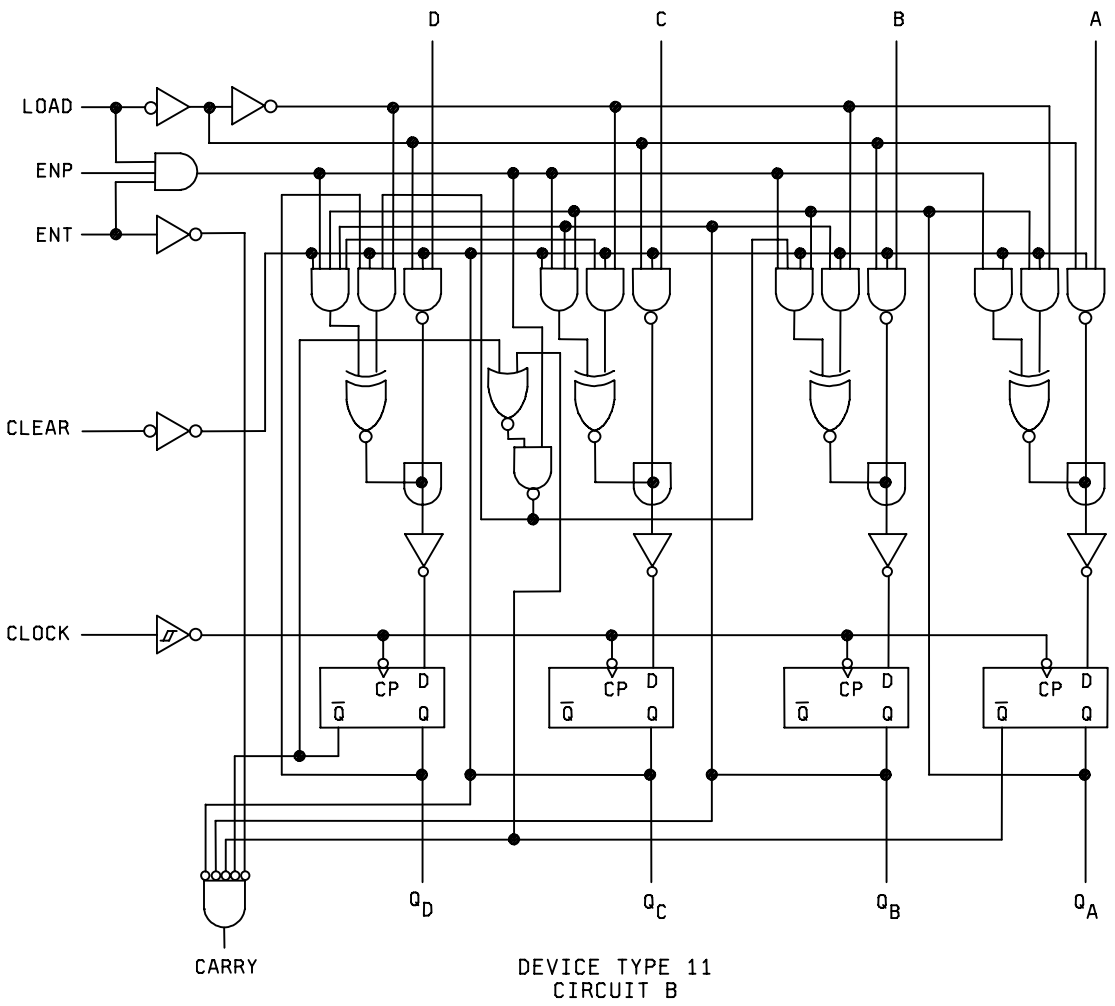

FIGURE 2. Logic diagrams – Continued.

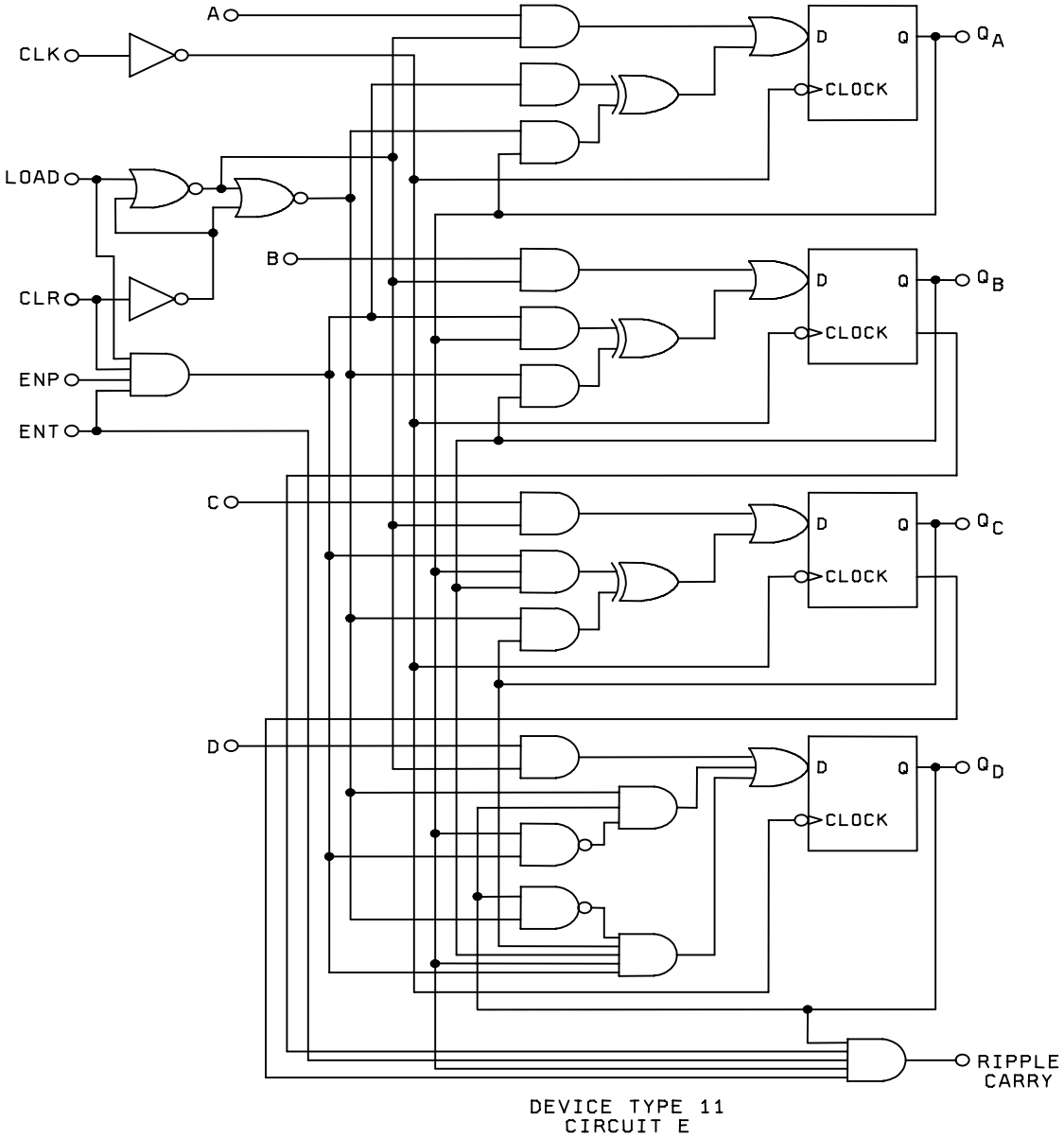

FIGURE 2. Logic diagrams – Continued.

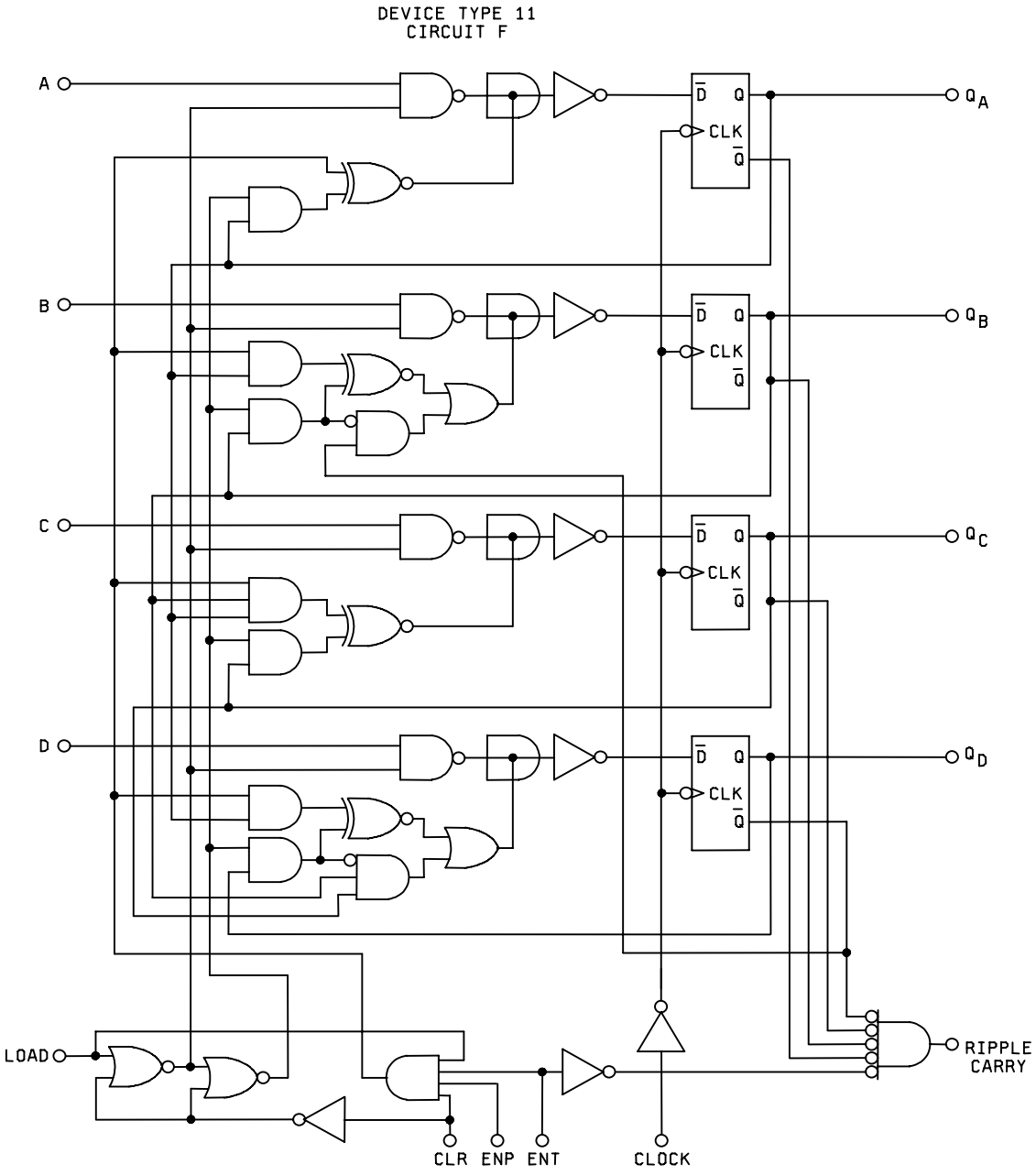

FIGURE 2. Logic diagrams – Continued.

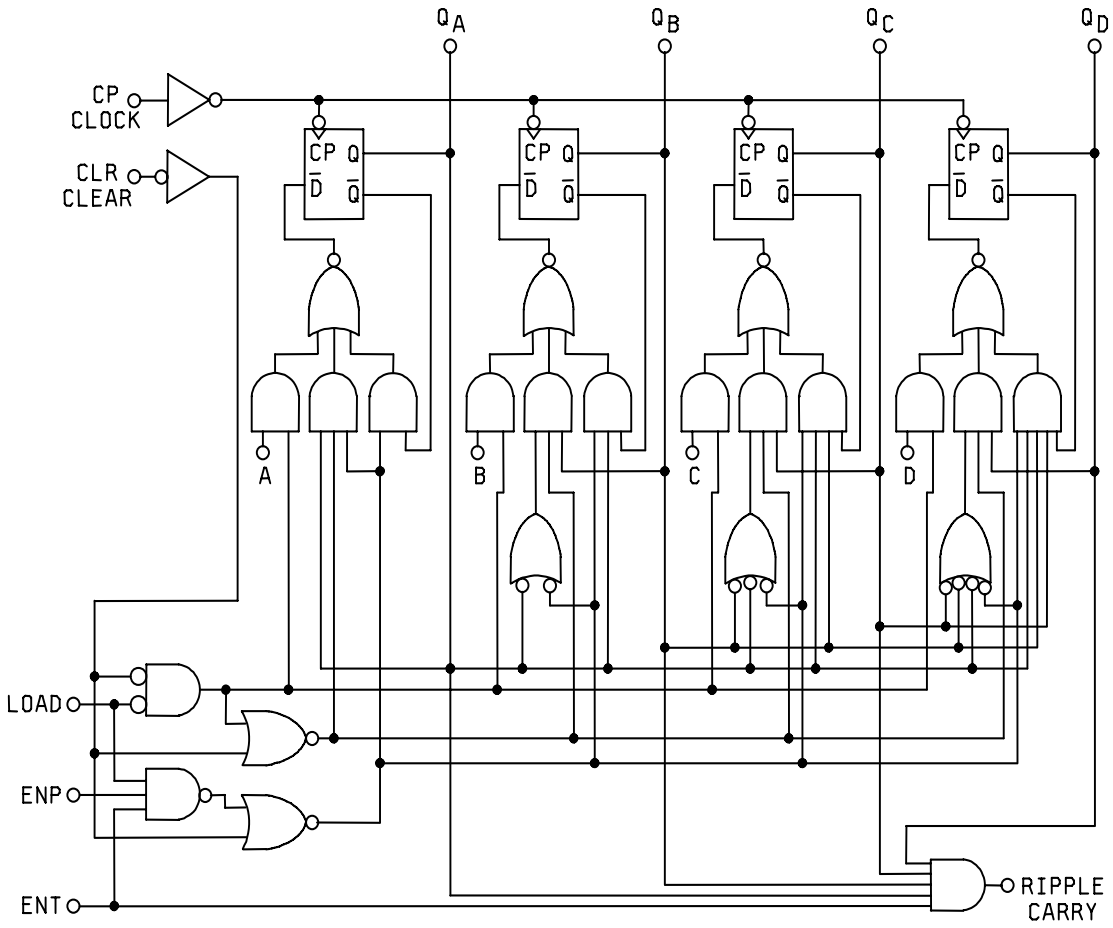

DEVICE TYPE 12
CIRCUITS A,C,D, AND G

FIGURE 2. Logic diagrams – Continued.

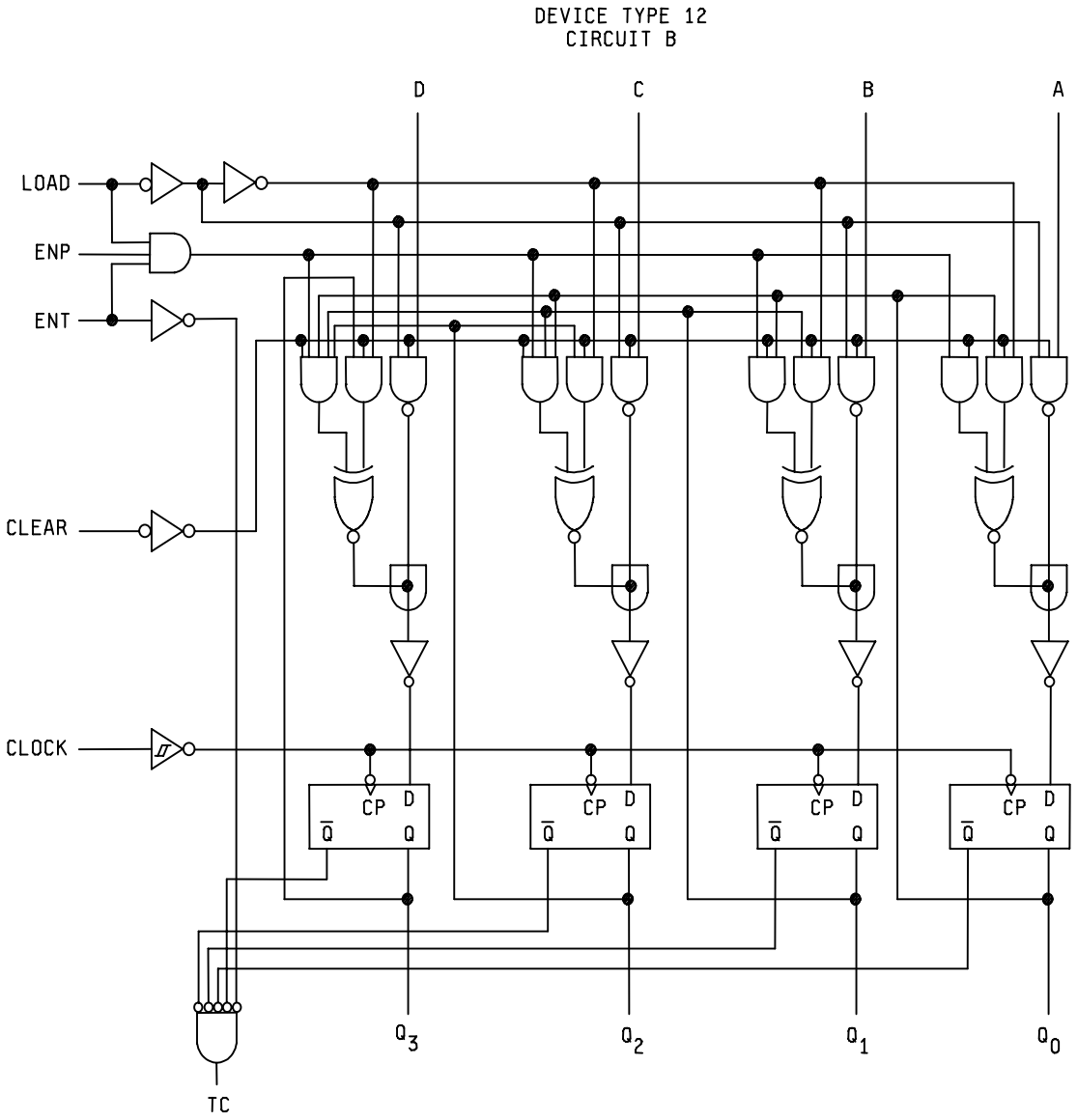

FIGURE 2. Logic diagrams – Continued.

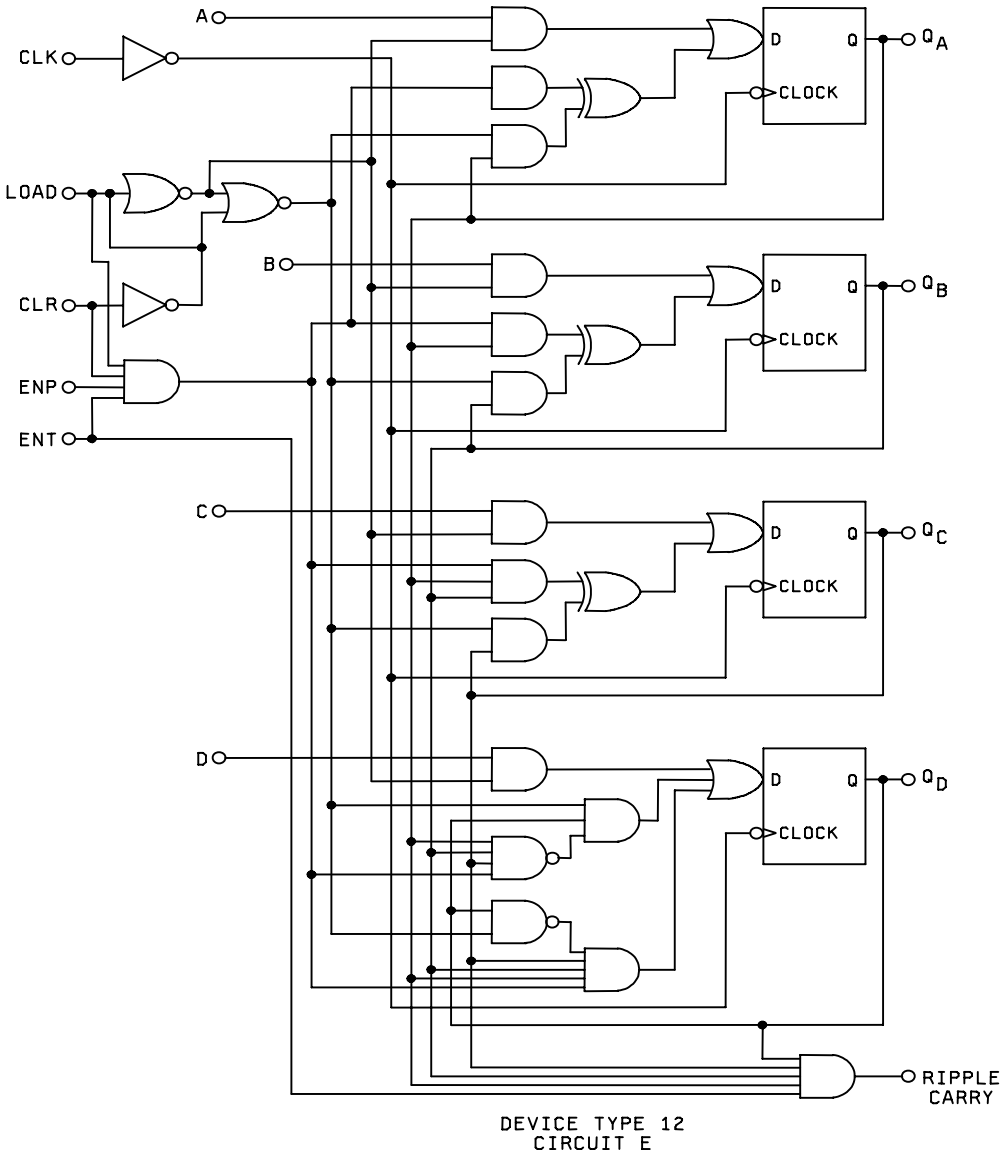

FIGURE 2. Logic diagrams – Continued.

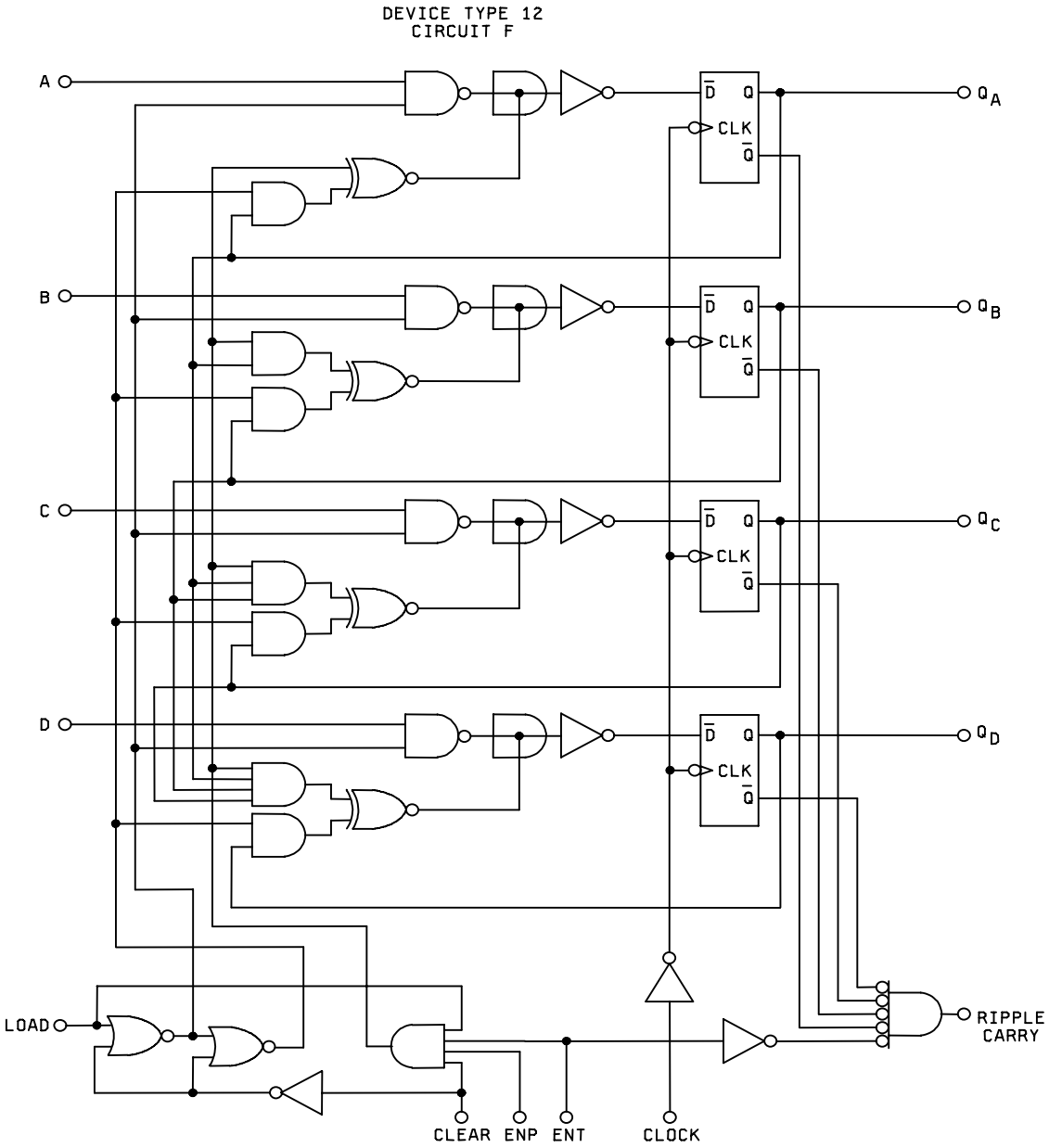

FIGURE 2. Logic diagrams – Continued.

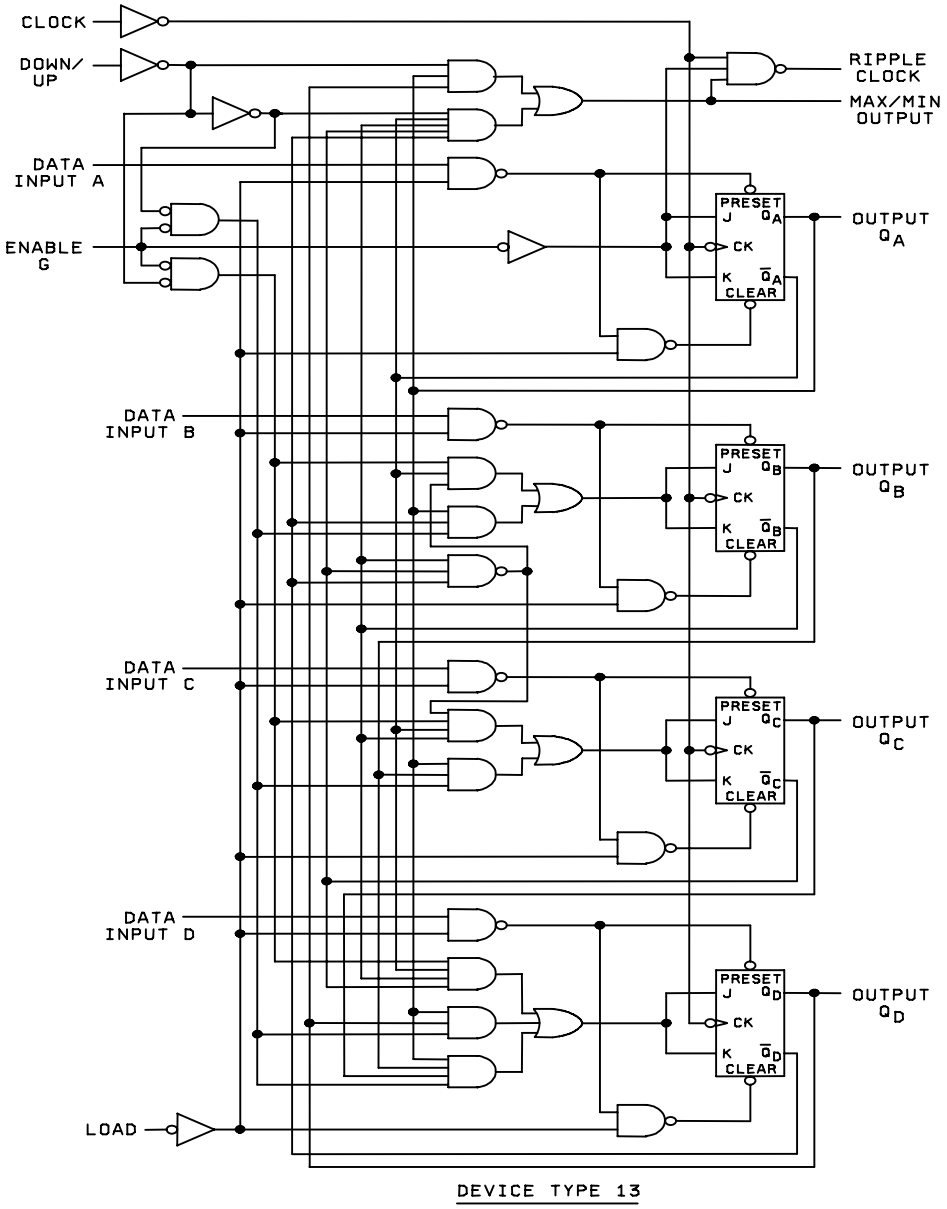

FIGURE 2. Logic diagrams – Continued.

DEVICE TYPE 01

BCD COUNT SEQUENCE
(See Note A)

COUNT	OUTPUT			
	Q_D	Q_C	Q_B	Q_A
0	L	L	L	L
1	L	L	L	H
2	L	L	H	L
3	L	L	H	H
4	L	H	L	L
5	L	H	L	H
6	L	H	H	L
7	L	H	H	H
8	H	L	L	L
9	H	L	L	H

BI-QUINARY (5-2)
(See Note B)

COUNT	OUTPUT			
	Q_A	Q_D	Q_C	Q_B
0	L	L	L	L
1	L	L	L	H
2	L	L	H	L
3	L	L	H	H
4	L	H	L	L
5	H	L	L	L
6	H	L	L	H
7	H	L	H	L
8	H	L	H	H
9	H	H	L	L

RESET/COUNT FUNCTION TABLE

RESET INPUTS				OUTPUT			
$R_{0(1)}$	$R_{0(2)}$	$R_{9(1)}$	$R_{9(2)}$	Q_D	Q_C	Q_B	Q_A
H	H	L	X	L	L	L	L
H	H	X	L	L	L	L	L
X	X	H	H	H	L	L	H
X	L	X	L	COUNT			
L	X	L	X	COUNT			
L	X	X	L	COUNT			
X	L	L	X	COUNT			

NOTES: A. Output Q_A is connected to input B for BCD count.
B. Output Q_D is connected to input A for bi-quinary count.

FIGURE 3. Truth tables.

DEVICE TYE 02

COUNT SEQUENCE
(See Note)

COUNT	OUTPUT			
	Q_D	Q_C	Q_B	Q_A
0	L	L	L	L
1	L	L	L	H
2	L	L	H	L
3	L	L	H	H
4	L	H	L	L
5	L	H	L	H
6	L	H	H	L
7	L	H	H	H
8	H	L	L	L
9	H	L	L	H
10	H	L	H	L
11	H	L	H	H
12	H	H	L	L
13	H	H	L	H
14	H	H	H	L
15	H	H	H	H

RESET/COUNT FUNCTION TABLE

RESET INPUTS		OUTPUT			
$R_{0(1)}$	$R_{0(2)}$	Q_D	Q_C	Q_B	Q_A
H	H	L	L	L	L
L	X	COUNT			
X	L	COUNT			

NOTE: Output Q_A is connected to input B.

DEVICE TYPE 10

COUNT SEQUENCE
(See Note)

COUNT	OUTPUT			
	Q_D	Q_C	Q_B	Q_A
0	L	L	L	L
1	L	L	L	H
2	L	L	H	L
3	L	L	H	H
4	L	H	L	L
5	L	H	L	H
6	H	L	L	L
7	H	L	L	H
8	H	L	H	L
9	H	L	H	H
10	H	H	L	L
11	H	H	L	H

RESET/COUNT FUNCTION TABLE

RESET INPUTS		OUTPUT			
$R_{0(1)}$	$R_{0(2)}$	Q_D	Q_C	Q_B	Q_A
H	H	L	L	L	L
L	X	COUNT			
X	L	COUNT			

NOTE: Output Q_A is connected to input B.

FIGURE 3. Truth tables.

SYNCHRONOUS TRUTH TABLE, DEVICE TYPES 3 AND 11

Input at time t_n									Outputs at time t_{n+1}				
Clock	Enable P	Enable T	Load	A	B	C	D	Clear	Q_A	Q_B	Q_C	Q_D	Carry output
CP	L	X	H	X	X	X	X	H	NC	NC	NC	NC	NC
CP	X	L	H	X	X	X	X	H	NC	NC	NC	NC	L
CP	H	H	H	X	X	X	X	H	Previous count plus 1 (note 1)				H if count = 9 L if count < 9
CP	X	H	L	X	X	X	X	H	A	B	C	D	H if count = 9 L if count < 9
CP	X	L	L	X	X	X	X	H	A	B	C	D	L
CP	X	X	X	X	X	X	X	L	L	L	L	L	L

ASYNCHRONOUS TRUTH TABLE, DEVICE TYPE 3

Inputs at time t_n									Outputs at time t_{n+1}				
Clock	Enable P	Enable T	Load	A	B	C	D	Clear	Q_A	Q_B	Q_C	Q_D	Carry output
X	X	X	X	X	X	X	X	L	L	L	L	L	L

NOTES:
1. See up count sequence table.
2. L = V_{IL} for inputs, V_{0L} for outputs.
3. H = V_{IH} for inputs, V_{0H} for outputs.
4. X = V_{IH} or V_{IL}.
5. CP = Clock pulse.
6. NC = No change.

UP COUNT SEQUENCE TABLE

Q_A (LSB)	Q_B	Q_C	Q_D (MSB)
L	L	L	L
H	L	L	L
L	H	L	L
H	H	L	L
L	L	H	L
H	L	H	L
L	H	H	L
H	H	H	L
L	L	L	H
H	L	L	H

FIGURE 3. Truth tables – Continued.

SYNCHRONOUS TRUTH TABLE, DEVICE TYPES 4 AND 12

Input at time t_n									Outputs at time t_{n+1}				
Clock	Enable P	Enable T	Load	A	B	C	D	Clear	Q_A	Q_B	Q_C	Q_D	Carry output
CP	L	X	H	X	X	X	X	H	NC	NC	NC	NC	NC
CP	X	L	H	X	X	X	X	H	NC	NC	NC	NC	L
CP	H	H	H	X	X	X	X	H	Previous count plus 1 (note 1)				H if count = 15 L if count < 15
CP	X	H	L	X	X	X	X	H	A	B	C	D	H if count = 15 L if count < 15
CP	X	L	L	X	X	X	X	H	A	B	C	D	L
CP	X	X	X	X	X	X	X	L	L	L	L	L	L

ASYNCHRONOUS TRUTH TABLE, DEVICE TYPE 4

Inputs at time t_n									Outputs at time t_{n+1}				
Clock	Enable P	Enable T	Load	A	B	C	D	Clear	Q_A	Q_B	Q_C	Q_D	Carry output
X	X	X	X	X	X	X	X	L	L	L	L	L	L

NOTES:
1. See up count sequence table.
2. L = V_{IL} for inputs, V_{0L} for outputs.
3. H = V_{IH} for inputs, V_{0H} for outputs.
4. X = V_{IH} or V_{IL}.
5. CP = Clock pulse.
6. NC = No change.

UP COUNT SEQUENCE TABLE

Q_A (LSB)	Q_B	Q_C	Q_D (MSB)
L	L	L	L
H	L	L	L
L	H	L	L
H	H	L	L
L	L	H	L
H	L	H	L
L	H	H	L
H	H	H	L
L	L	L	H
H	L	L	H
L	H	L	H
H	H	L	H
L	L	H	H
H	L	H	H
L	H	H	H
H	H	H	H

FIGURE 3. Truth tables – Continued.

Device type 05

UP COUNT SEQUENCE TABLE

Q_A (LSB)	Q_B	Q_C	Q_D (MSB)
L	L	L	L
H	L	L	L
L	H	L	L
H	H	L	L
L	L	H	L
H	L	H	L
L	H	H	L
H	H	H	L
L	L	L	H
H	L	L	H

Device type 06

UP COUNT SEQUENCE TABLE

Q_A (LSB)	Q_B	Q_C	Q_D (MSB)
L	L	L	L
H	L	L	L
L	H	L	L
H	H	L	L
L	L	H	L
H	L	H	L
L	H	H	L
H	H	H	L
L	L	L	H
H	L	L	H
L	H	L	H
H	H	L	H
L	L	H	H
H	L	H	H
L	H	H	H
H	H	H	H

Device types 05 and 06

MODE SELECT TABLE

L	EP	ET	$U/\overline{D}$	Action on Rising Clock Edge
L	X	X	X	Load ($D_n \rightarrow Q_n$)
H	L	L	H	Count Up (increment)
H	L	L	L	Count Down (decrement)
H	H	X	X	No Change (Hold)
H	X	H	X	No Change (Hold)

H = High voltage level
L = Low voltage
X = Don't care

FIGURE 3. Truth tables – Continued.

DEVICE TYPE 7 TRUTH TABLE

Inputs at time t_n								Outputs at time $t_{n=1}$					
Count Up	Count Down	Load	A	B	C	D	Clear	Q_A	Q_B	Q_C	Q_D	Carry	Borrow
H	H	H	X	X	X	X	L	NC	NC	NC	NC	H	H
H	H	H	X	X	X	X	H	L	L	L	L	H	H
H	H	L	X	X	X	X	L	A	B	C	D	H	H
P	H	H	X	X	X	X	L	Previous count plus 1 (note 1)				H	H
H	P	H	X	X	X	X	L	Previous count minus 1 (note 2)				H	H
N	H	H	X	X	X	X	L	NC	NC	NC	NC	N if count = 9 H if count $\neq$ 9	H
H	N	H	X	X	X	X	L	NC	NC	NC	NC	H	N if count = 0 H if count $\neq$ 0

NOTES:
1. See up count sequence table.
2. See down count sequence table.
3. L= V_{IL} for inputs, V_{OL} for outputs.
4. H = V_{IH} for inputs, V_{OH} for outputs.
5. X = V_{IH} or V_{IL}.
6. NC = No change.
7. NA = Not applicable.
8. P = Positive going pulse.
9. N= Negative going pulse.

FIGURE 3. Truth tables – Continued.

DEVICE TYPE 07

UP COUNT SEQUENCE TABLE

Q_A (LSB)	Q_B	Q_C	Q_D (MSB)	Carry
L	L	L	L	H
H	L	L	L	H
L	H	L	L	H
H	H	L	L	H
L	L	H	L	H
H	L	H	L	H
L	H	H	L	H
H	H	H	L	H
L	L	L	H	H
H	L	L	H	L

DOWN COUNT SEQUENCE TABLE

Q_A (LSB)	Q_B	Q_C	Q_D (MSB)	Borrow
H	L	L	H	H
L	L	L	H	H
H	H	H	L	H
L	H	H	L	H
H	L	H	L	H
L	L	H	L	H
H	H	L	L	H
L	H	L	L	H
H	L	L	L	H
L	L	L	L	L

DEVICE TYPE 8 TRUTH TABLE

Input at time t_n								Outputs at time $t_{n=1}$					
Count up	Count down	Load	A	B	C	D	Clear	Q_A	Q_B	Q_C	Q_D	Carry	Borrow
H	H	H	X	X	X	X	L	NC	NC	NC	NC	H	H
H	H	H	X	X	X	X	H	L	L	L	L	H	H
H	H	L	X	X	X	X	L	A	B	C	D	H	H
P	H	H	X	X	X	X	L	Previous count plus 1 (note)				H	H
H	P	H	X	X	X	X	L	Previous count minus 1 (note 2)				H	H
N	H	H	X	X	X	X	L	NC	NC	NC	NC	N if count = 15 H if count $\neq$ 15	H
H	N	H	X	X	X	X	L	NC	NC	NC	NC	H	N if count = 0 H if count $\neq$ 0

NOTES:
1. See up count sequence table.
2. See down count sequence table.
3. L = V_{IL} for inputs, V_{OL} for outputs.
4. H = V_{IH} for inputs, V_{OH} for outputs.
5. X = V_{IH} or V_{IL}.
6. NC = No change.
7. NA = Not applicable.
8. P = Positive going pulse.
9. N = Negative going pulse.

FIGURE 3. Truth tables – Continued.

DEVICE TYPE 08

UP COUNT SEQUENCE TABLE

Q_A (LSB)	Q_B	Q_C	Q_D (MSB)	Carry
L	L	L	L	H
H	L	L	L	H
L	H	L	L	H
H	H	L	L	H
L	L	H	L	H
H	L	H	L	H
L	H	H	L	H
H	H	H	L	H
L	L	L	H	H
H	L	L	H	H
L	H	L	H	H
H	H	L	H	H
L	L	H	H	H
H	L	H	H	H
L	H	H	H	H
H	H	H	H	L

DOWN COUNT SEQUENCE TABLE

Q_A (LSB)	Q_B	Q_C	Q_D (MSB)	Borrow
H	H	H	H	H
L	H	H	H	H
H	L	H	H	H
L	L	H	H	H
H	H	L	H	H
L	H	L	H	H
H	L	L	H	H
L	L	L	H	H
H	H	H	L	H
L	H	H	L	H
H	L	H	L	H
L	L	H	L	H
H	H	L	L	H
L	H	L	L	H
H	L	L	L	H
L	L	L	L	L

DEVICE TYPES 09 AND 13

Mode select table

Inputs				Mode
Load	Enable G	U/D	CLK	
H	L	L	⌐¬	Count up
H	L	H	⌐¬	Count down
L	X	X	X	Preset (Asyn)
H	H	X	X	No change (Hold)

Ripple carry truth table

Inputs		Outputs	
Enable G	CLK	Max/Min	RC output
L	¬⌐	H	¬⌐
H	X	X	H
X	X	L	H

L = Low voltage level
H = High voltage level
X = Don't care
⌐¬ = Low-to-high clock transition
¬⌐ = Negative going clock pulse

NOTE: The up count and down count sequence for device type 09 is identical as that for device type 08.

The up count and down count sequence for device type 13 is identical as that for device type 07.

FIGURE 3. Truth tables – Continued.

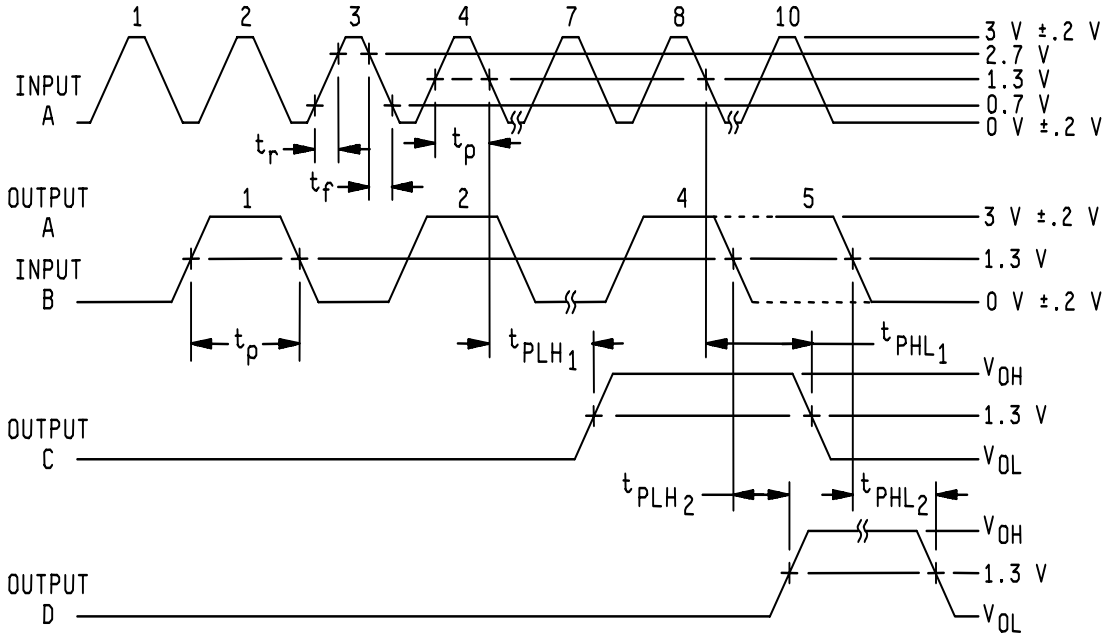

FIGURE 4. Switching time test circuit and waveforms for device type 01.

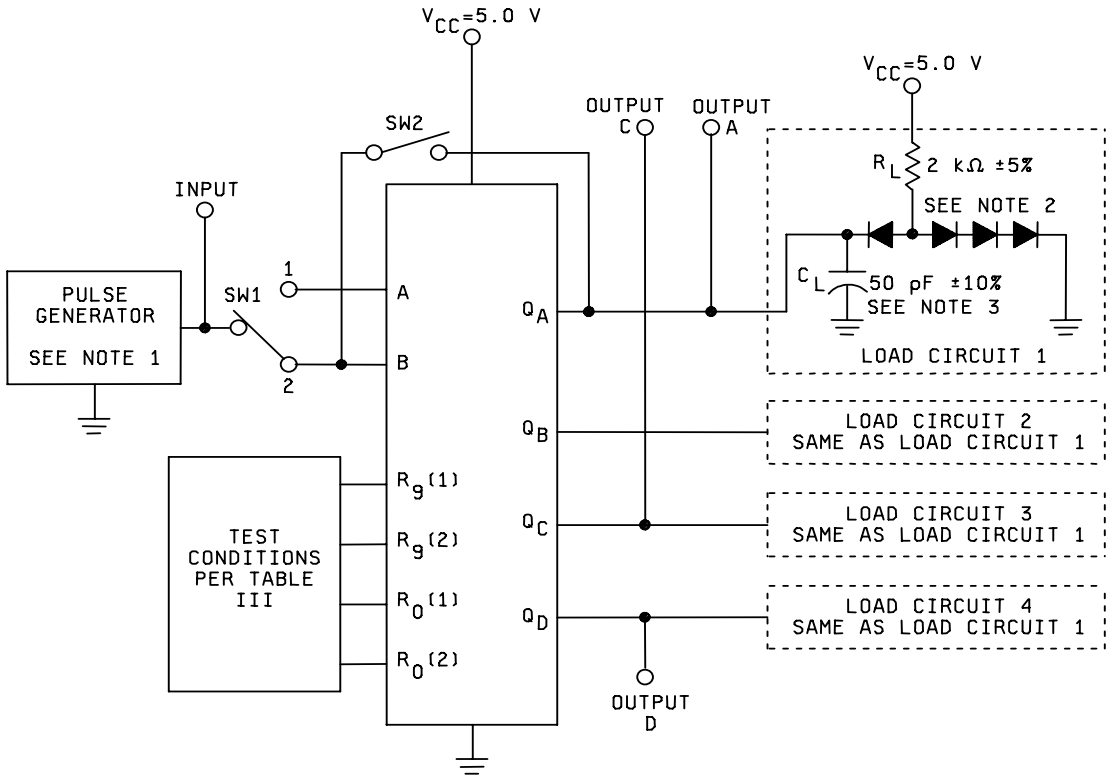

TEST	SWITCH POSITION	
	SW1	SW2
F MAX	1	CLOSED
A TO Q_C	1	CLOSED
B TO Q_D	2	OPEN

TEST CIRCUIT

NOTES:
1. The pulse generator has the following characteristics: V_{gen} = 3 V, $t_r \leq 15$ ns, $t_f \leq 6$ ns, t_p = .5 µs, PRR ≤ 1 MHz, $Z_{out} \approx 50\Omega$.
2. All diodes are 1N3064 or equivalent.
3. C_L includes probe and jig capacitance.
4. Voltage values are with respect to ground terminal.
5. F_{MAX}: $t_r = t_f \leq 6$ ns.

FIGURE 4. Switching time test circuit and waveforms for device type 01 – Continued.

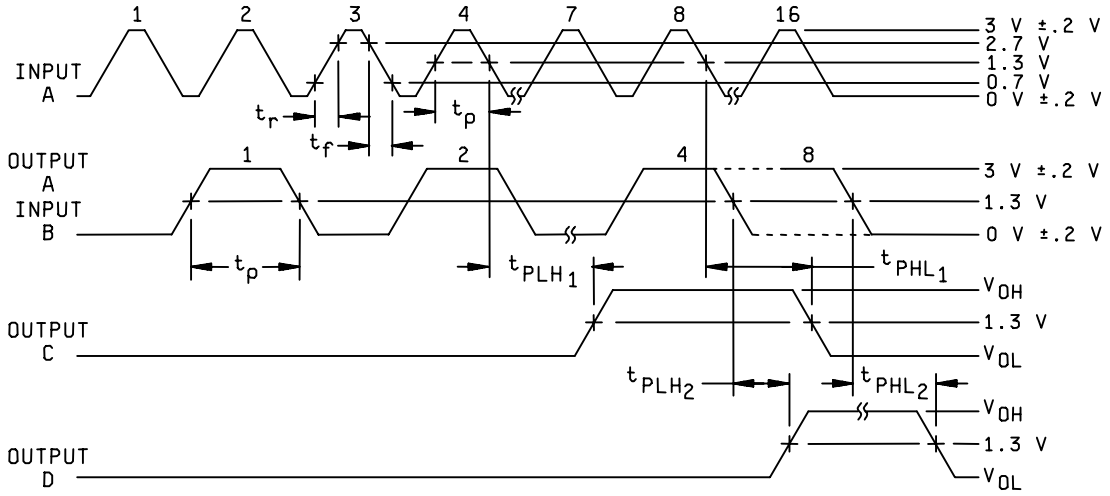

VOLTAGE WAVEFORMS

FIGURE 5. Switching time test circuit and waveforms for device type 02.

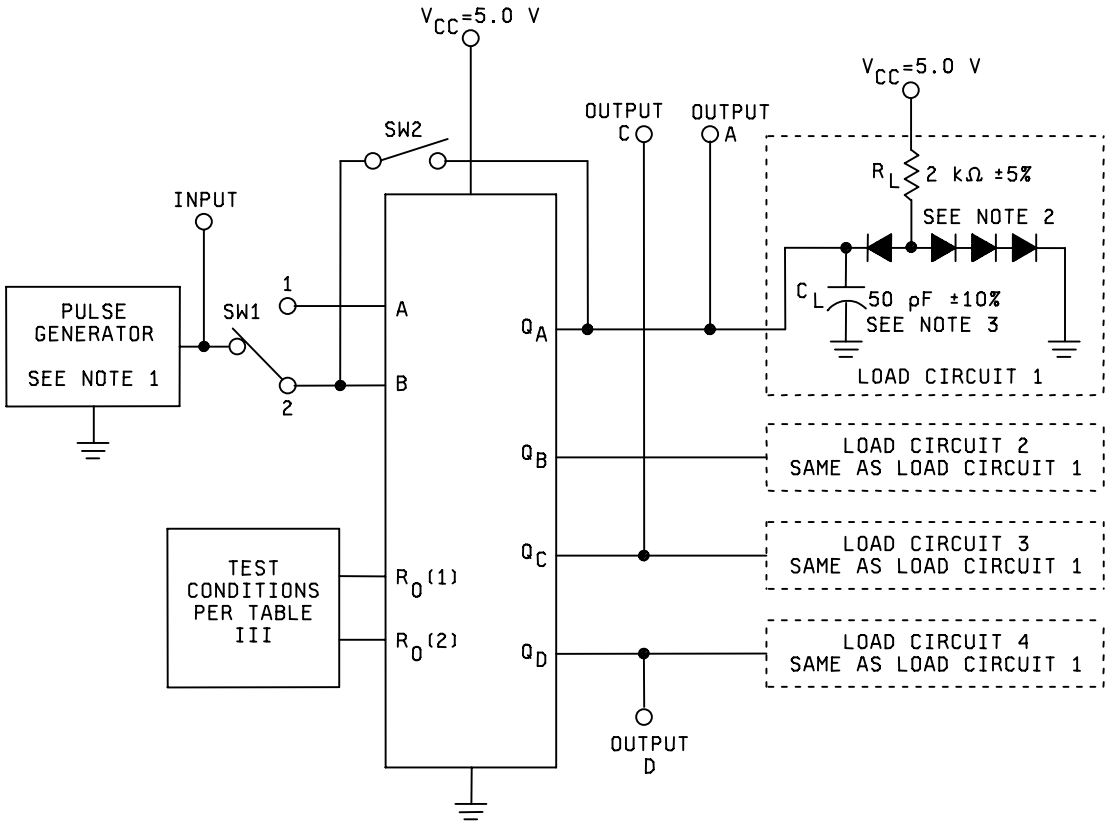

TEST	SWITCH POSITION	
	SW1	SW2
F MAX	1	CLOSED
A TO Q_C	1	CLOSED
B TO Q_D	2	OPEN

TEST CIRCUIT

NOTES:
1. The pulse generator has the following characteristics: V_{gen} = 3 V, $t_r \leq 15$ ns, $t_f \leq 6$ ns, t_p = .5 µs, PRR ≤ 1 MHz, $Z_{out} \approx 50\Omega$.
2. All diodes are 1N3064 or equivalent.
3. C_L includes probe and jig capacitance.
4. Voltage values are with respect to ground terminal.
5. F_{MAX}: $t_r = t_f \leq 6$ ns.

FIGURE 5. Switching time test circuit and waveforms for device type 02 – Continued.

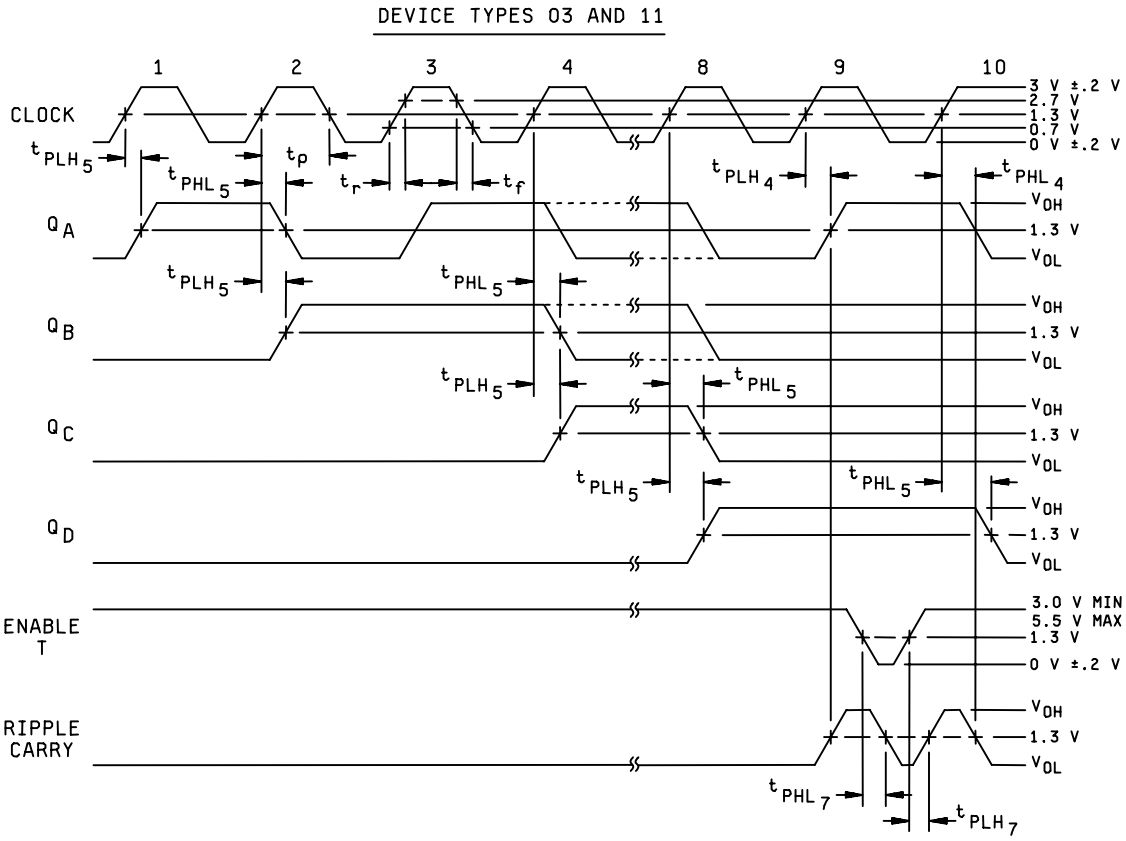

VOLTAGE WAVEFORMS

FIGURE 6. Switching time test circuit and waveforms for device types 03, 04, 11, and 12.

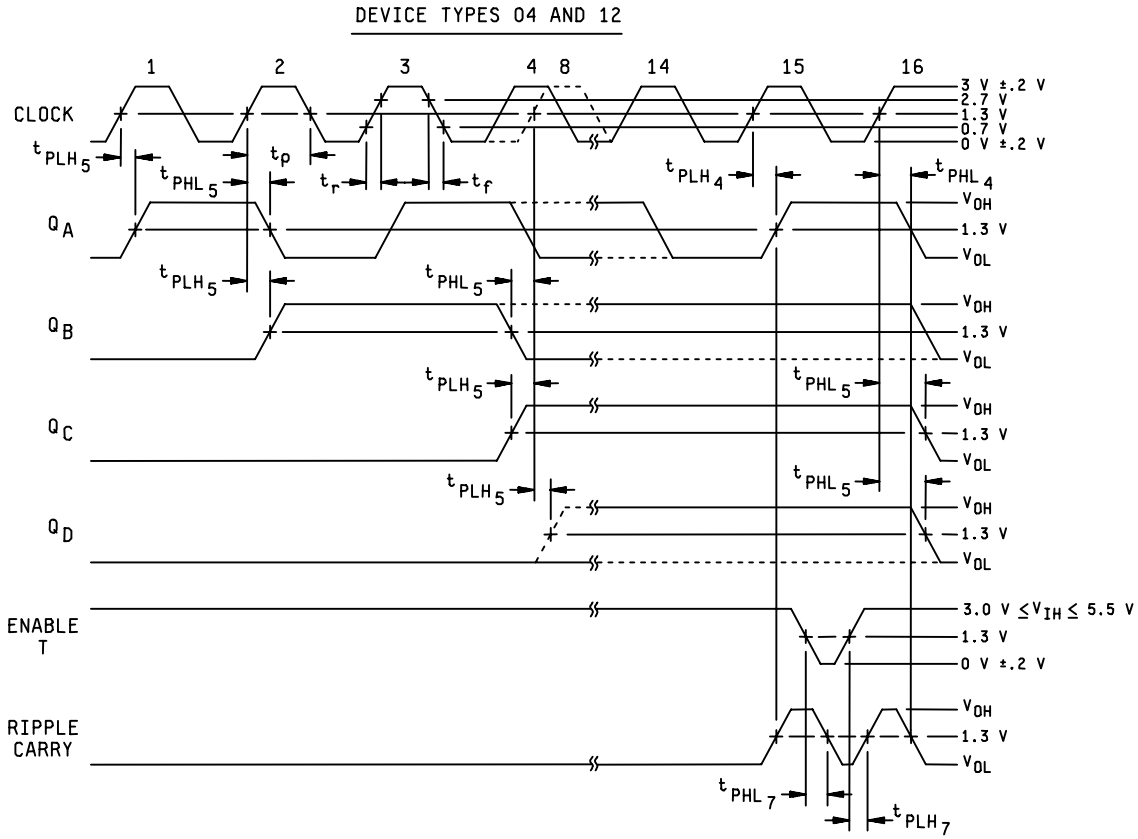

VOLTAGE WAVEFORMS

FIGURE 6. Switching time test circuit and waveforms for device types 03, 04, 11, and 12 – Continued.

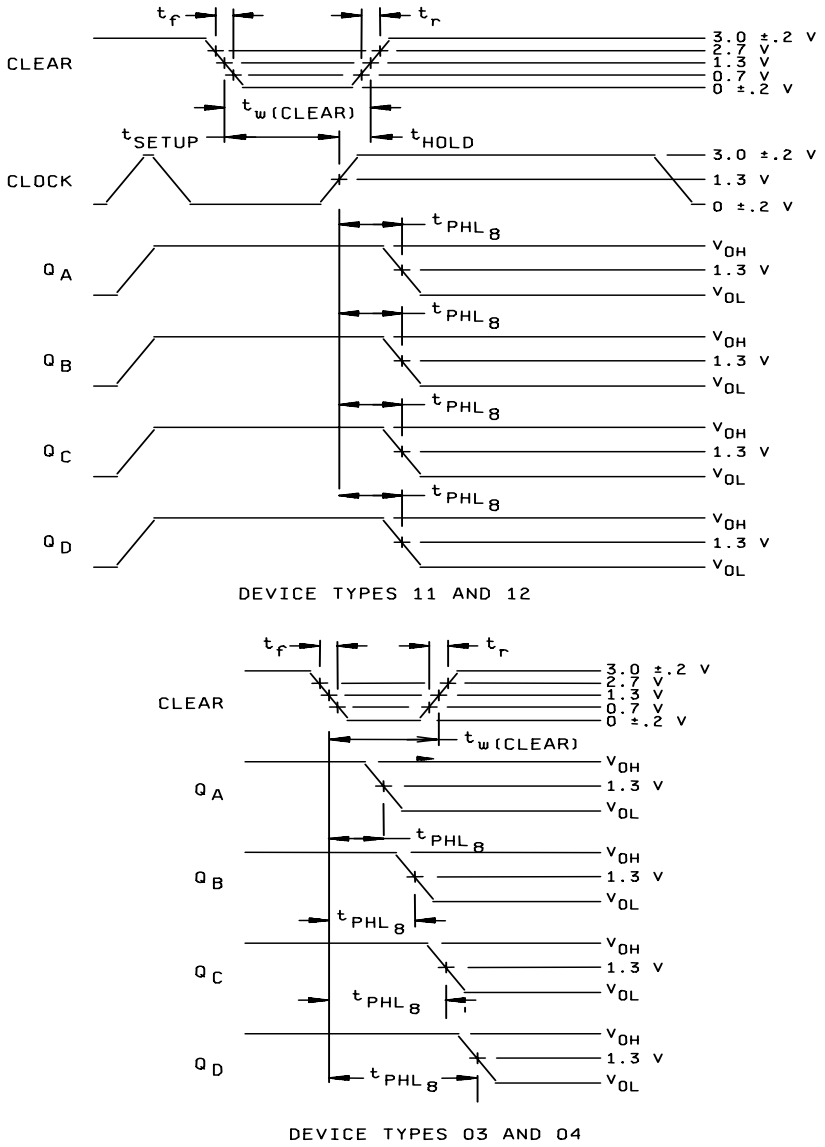

NOTE: The clear pulse generator has the following characteristics:
V_{gen} = 3.0 V, $t_r \leq 15$ ns, $t_f \leq 6$ ns, 20 ns $\leq t_{w(clear)} \leq 25$ ns for types 11 and 12, 20 ns $\leq t_{setup} \leq 25$ ns, $t_{hold} = 0$ ns.

FIGURE 6. Switching time test circuit and waveforms for device types 03, 04, 11, and 12 – Continued.

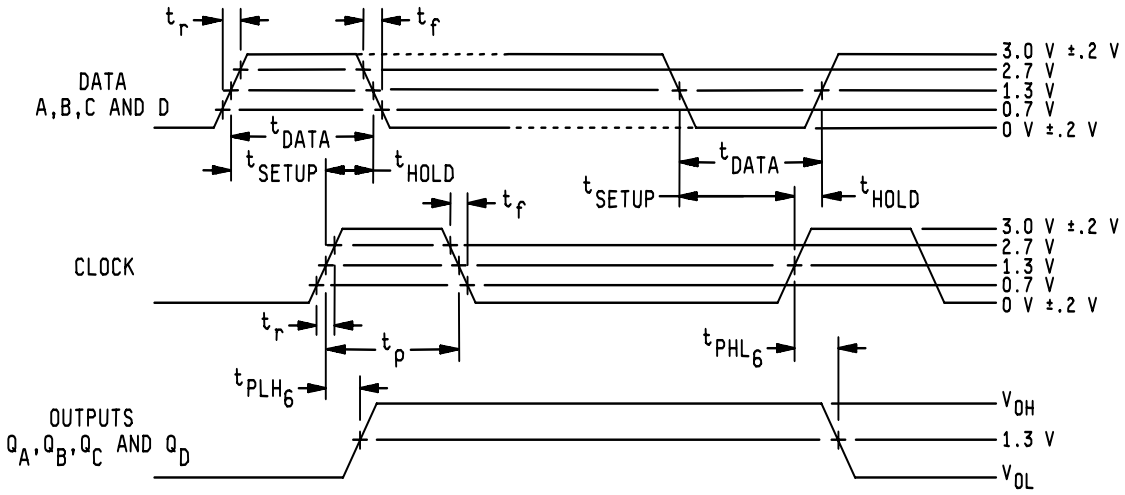

NOTE: The data pulse generator has the following characteristics: V_{gern} = 3.0 V, $t_r \leq 15$ ns, $t_f \leq 6$ ns, t_{DATA} = 30 ns, t_{setup} = 20 ns, t_{HOLD} = 10 ns.

FIGURE 6. Switching time test circuit and waveforms for device types 03, 04, 11, and 12 – Continued.

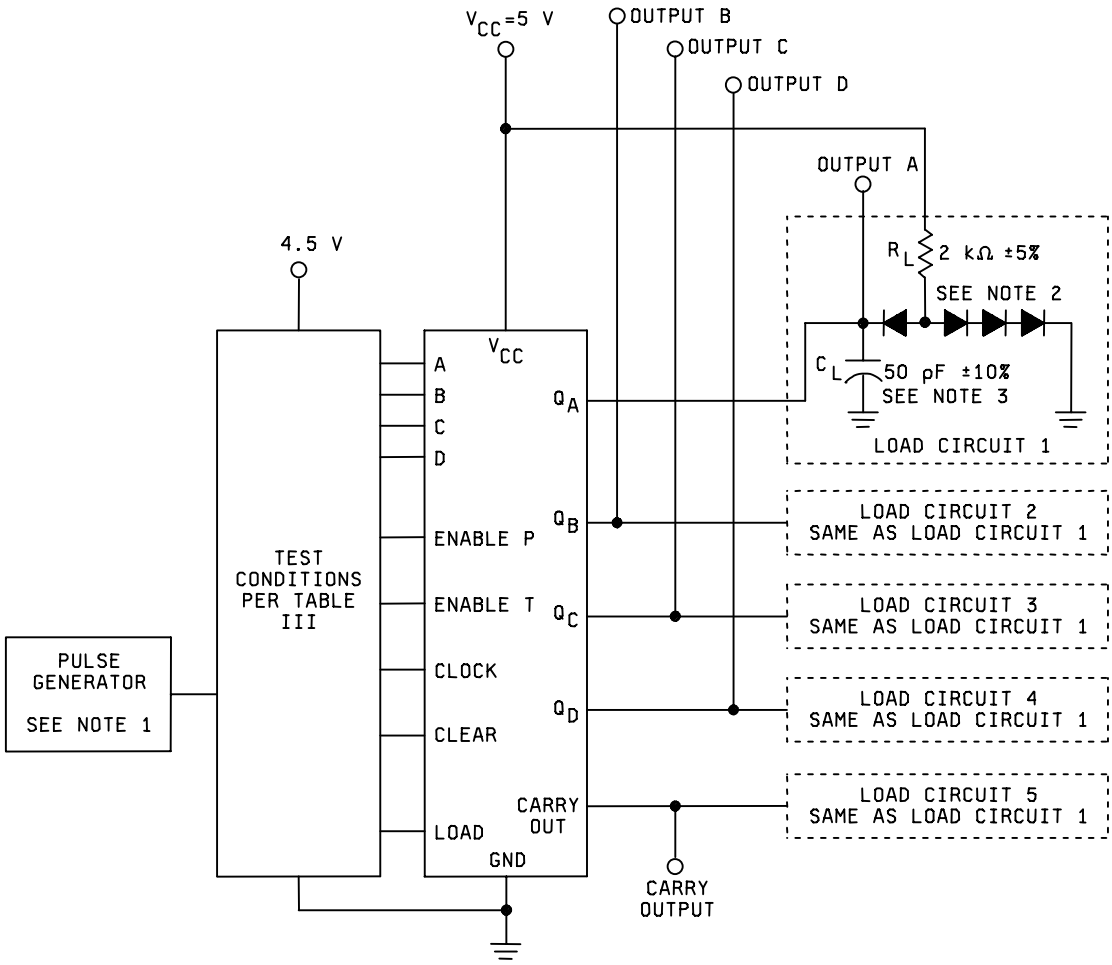

NOTES:
1. The pulse generator has the following characteristics: V_{gen} = 3 V, $t_r \leq 15$ ns, $t_f \leq 6$ ns, t_p = .5 µs, PRR ≤ 1 MHz, $Z_{out} \approx 50\Omega$.
2. All diodes are 1N3064 or equivalent.
3. C_L includes probe and jig capacitance.
4. Voltage values are with respect to ground terminal.
5. F_{MAX}: $t_r = t_f \leq 6$ ns.

FIGURE 6. Switching time test circuit and waveforms for device type 03, 04, 11, and 12 – Continued.

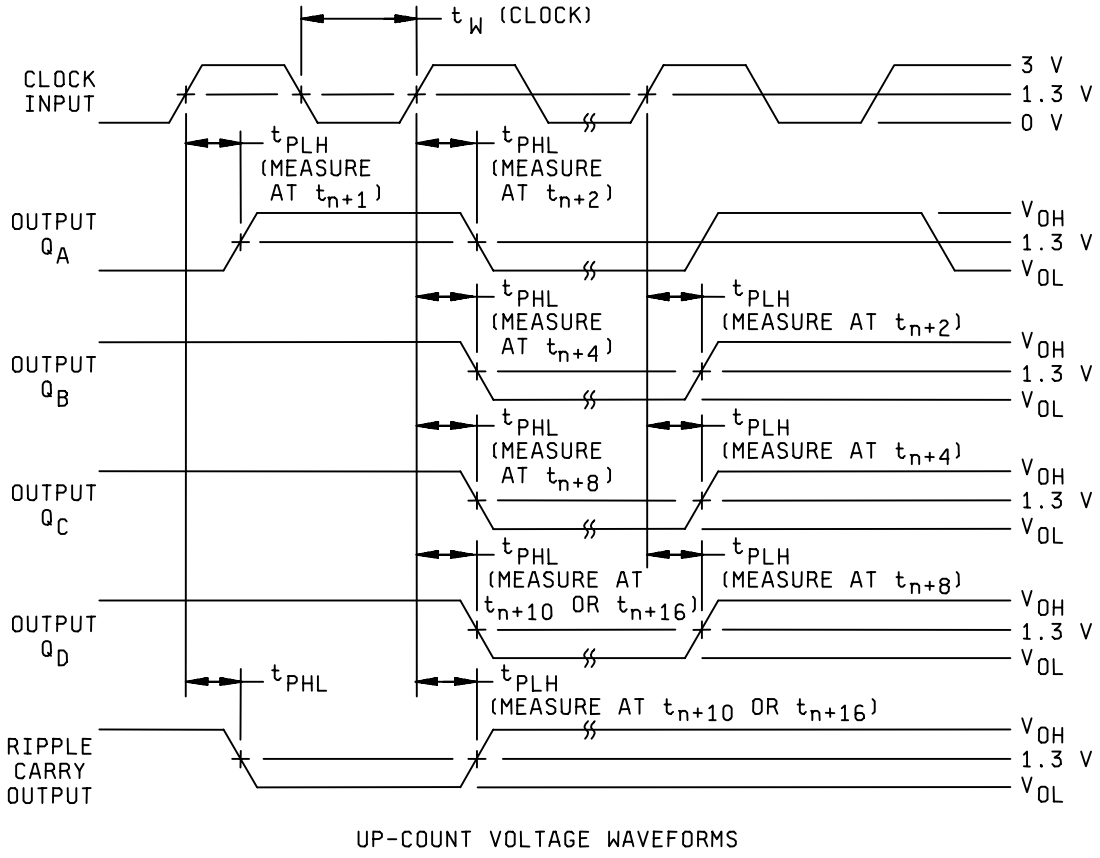

UP-COUNT VOLTAGE WAVEFORMS

FIGURE 7. Switching time test circuit and waveforms for device types 05 and 06.

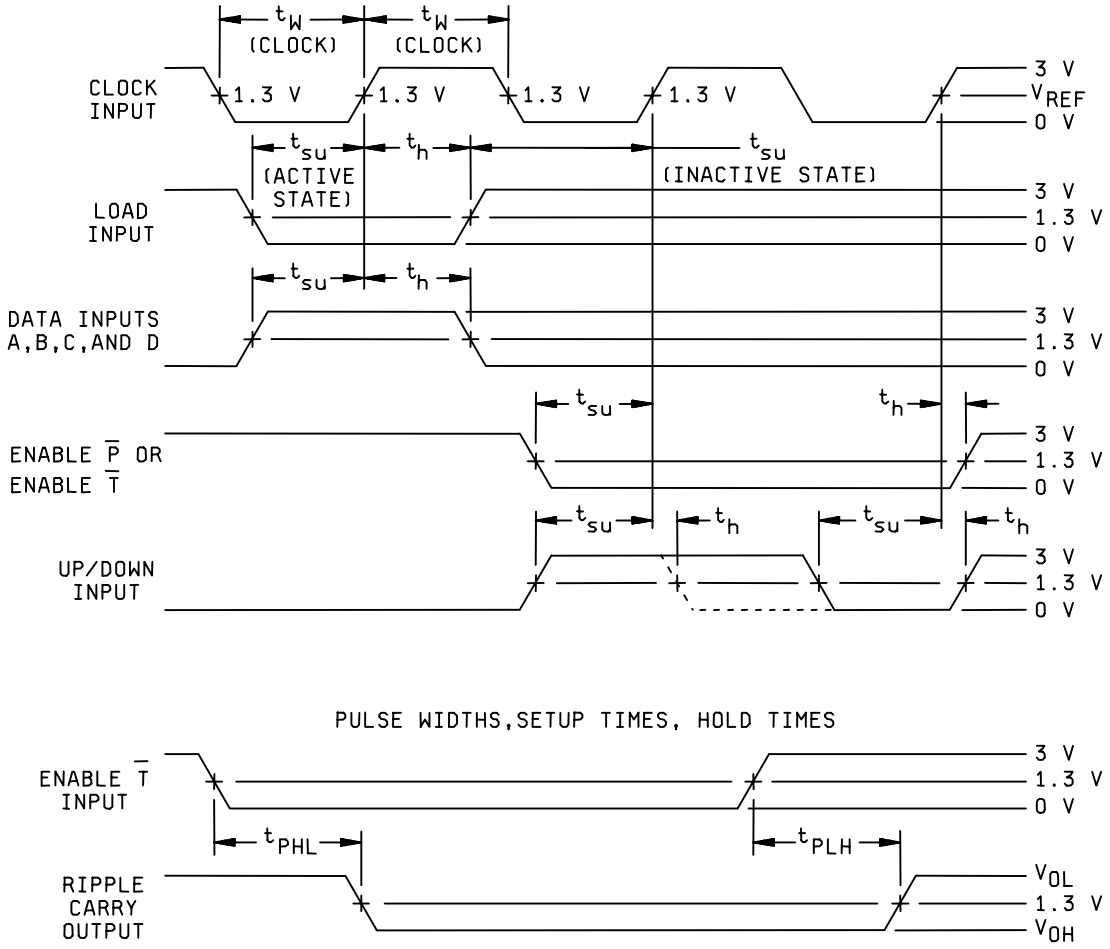

FIGURE 7. Switching time test circuit and waveforms for device types 05 and 06 – Continued.

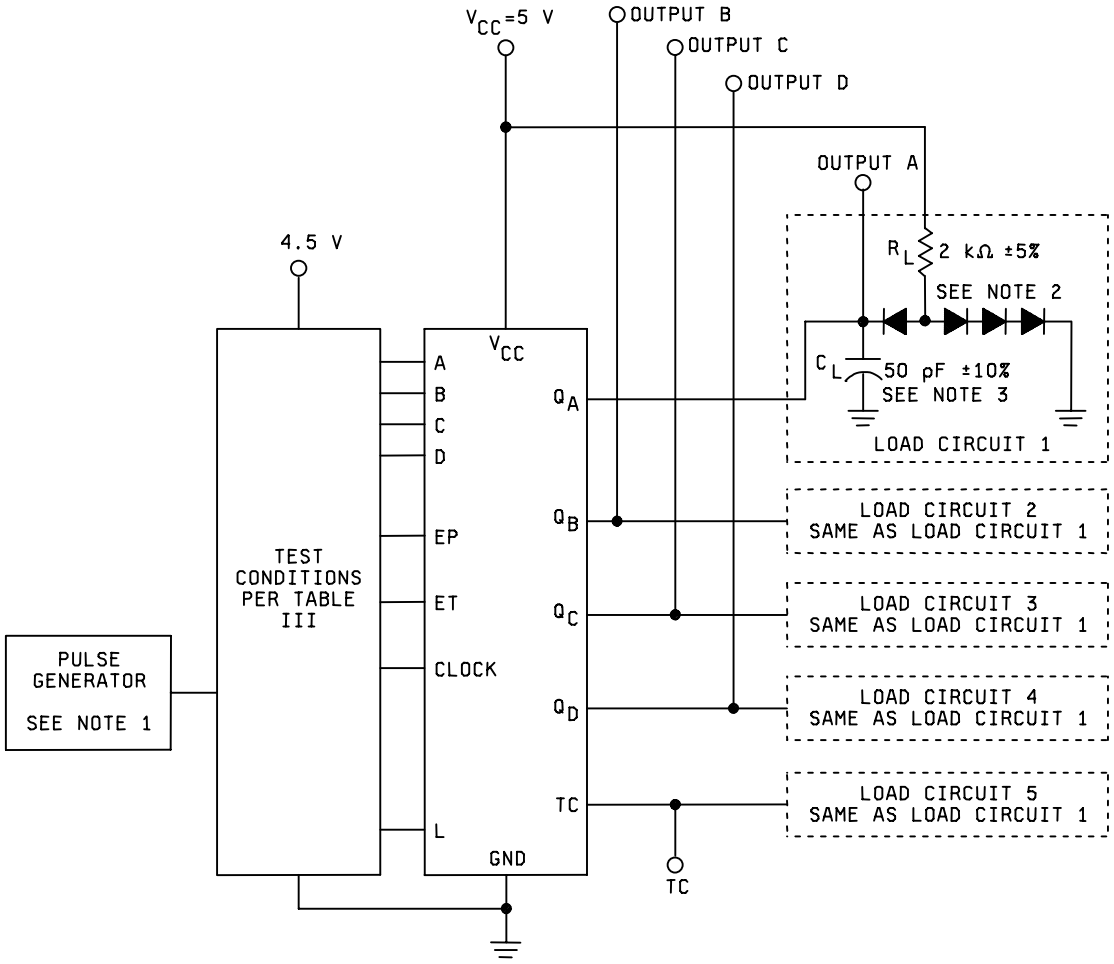

NOTES:
1. The pulse generator has the following characteristics: V_{gen} = 3 V, $t_r \leq 15$ ns, $t_f \leq 6$ ns, t_p = .5 µs, PRR ≤ 1 MHz, $Z_{out} \approx 50\Omega$.
2. All diodes are 1N3064 or equivalent.
3. C_L includes probe and jig capacitance.
4. Voltage values are with respect to ground terminal.
5. F_{MAX}: $t_r = t_f \leq 6$ ns.
6. The clear pulse generator has the following characteristics: V_{gen} = 3.0 V, $t_r \leq 15$ ns, $t_f \leq 6$ ns, $t_{w(CLEAR)}$ = 20 ns.

FIGURE 7. Switching time test circuit and waveforms for device types 05 and 06 – Continued.

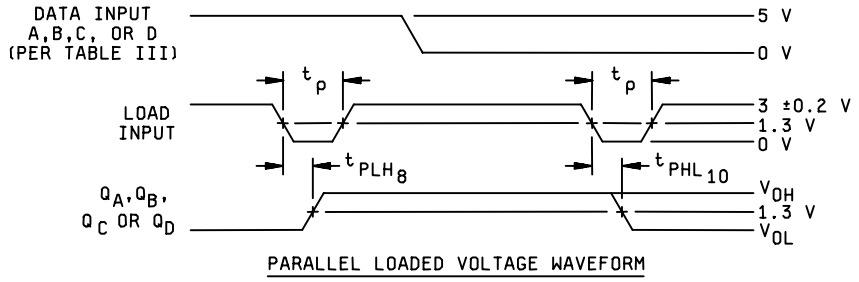

PARALLEL LOADED VOLTAGE WAVEFORM

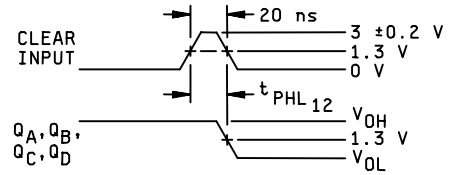

CLEAR SWITCHING VOLTAGE WAVEFORM

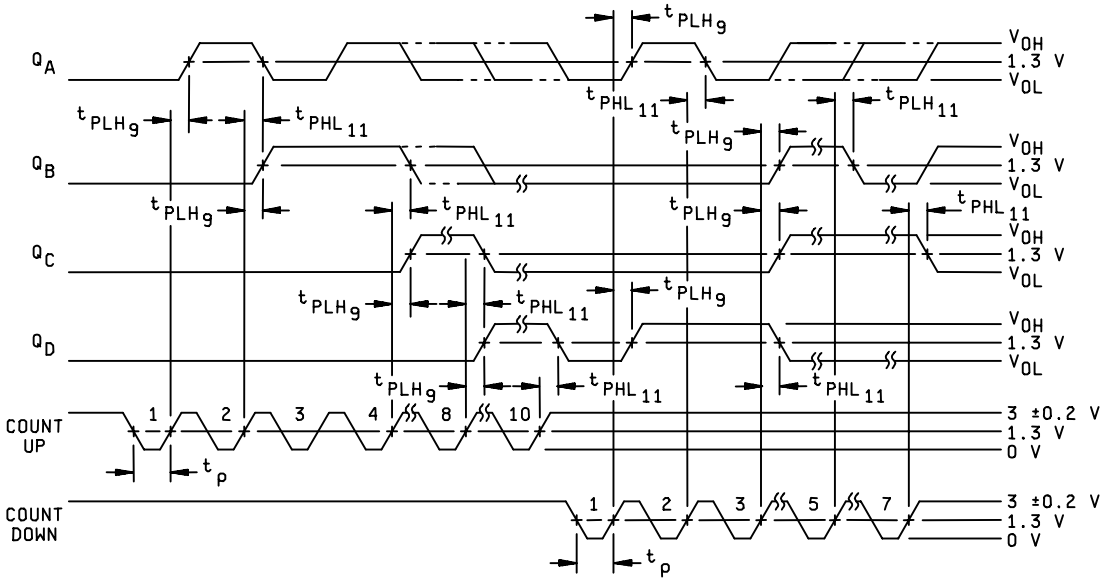

SERIAL LOADED VOLTAGE WAVEFORMS

FIGURE 8. Switching time test circuit and waveforms for device types 07.

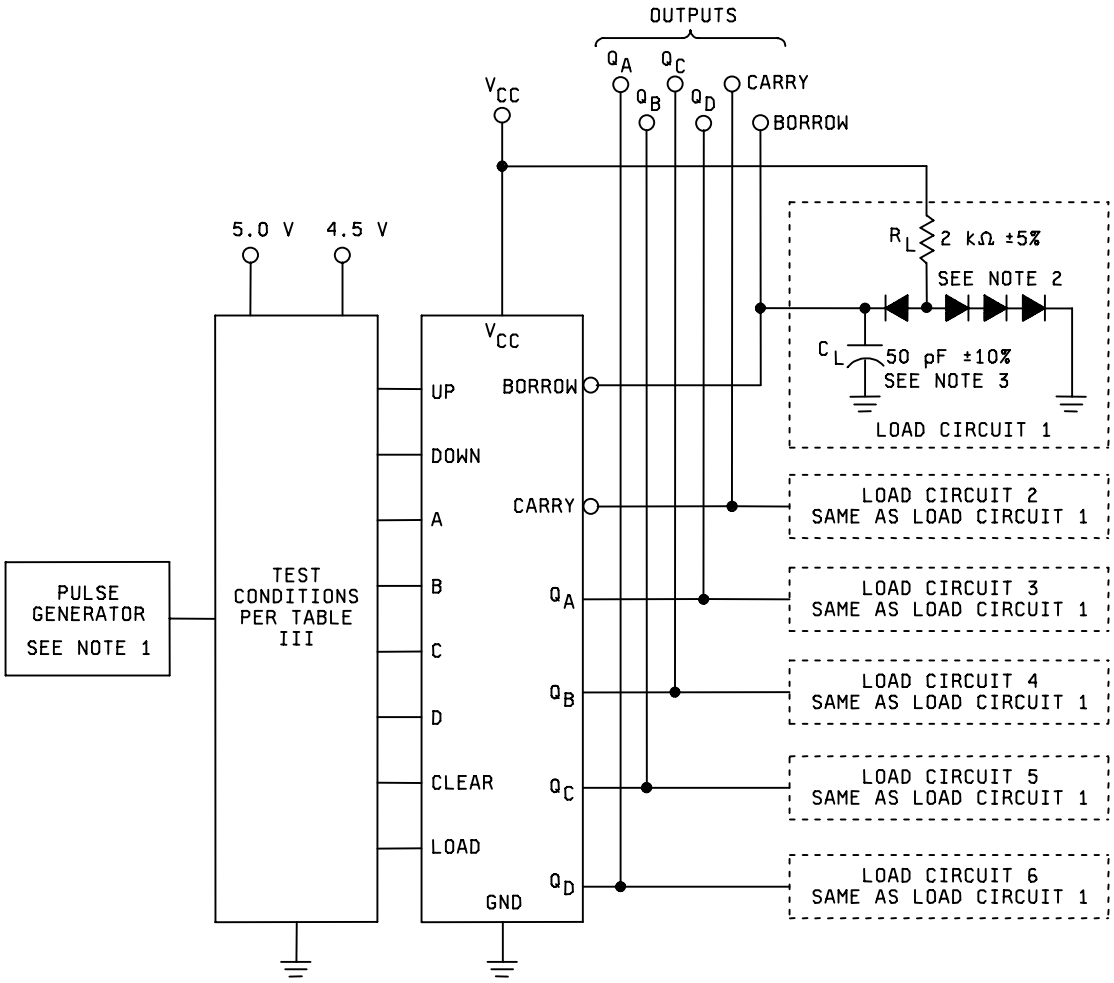

NOTES:
1. The pulse generator has the following characteristics: V_{gen} = 3 V, t_p = .5 µs, PRR ≤ 1 MHz, Z_{out} ≈ 50Ω, t_r ≤ 15 ns, t_f ≤ 6 ns between 0.7 V and 2.7 V.
2. All diodes are 1N3064 or equivalent.
3. C_L includes probe and jig capacitance.
4. Voltage values are with respect to ground terminal.
5. F_{MAX}: $t_r = t_f \leq 6$ ns.
6. The clear pulse generator has the following characteristics: V_{gen} = 3.0 V, $t_r \leq 15$ ns, $t_f \leq 6$ ns, between 0.7 V and 2.7 V, $t_{w(CLEAR)}$ = 20 ns.

FIGURE 8. Switching time test circuit and waveforms for device types 07 and Continued.

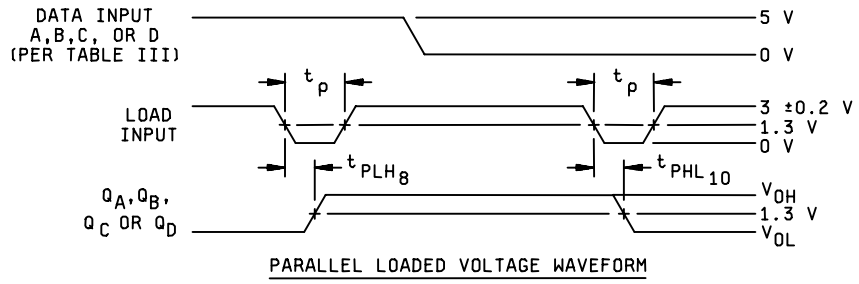

PARALLEL LOADED VOLTAGE WAVEFORM

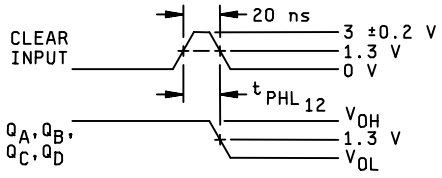

CLEAR SWITCHING VOLTAGE WAVEFORM

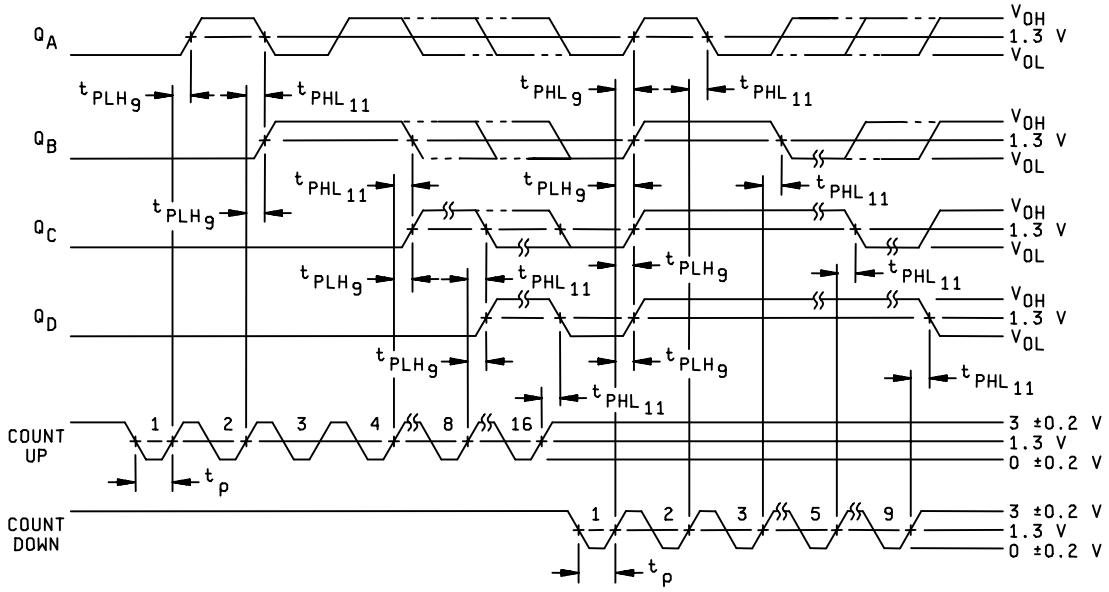

SERIAL LOADED VOLTAGE WAVEFORMS

FIGURE 9. Switching time test circuit and waveforms for device type 08.

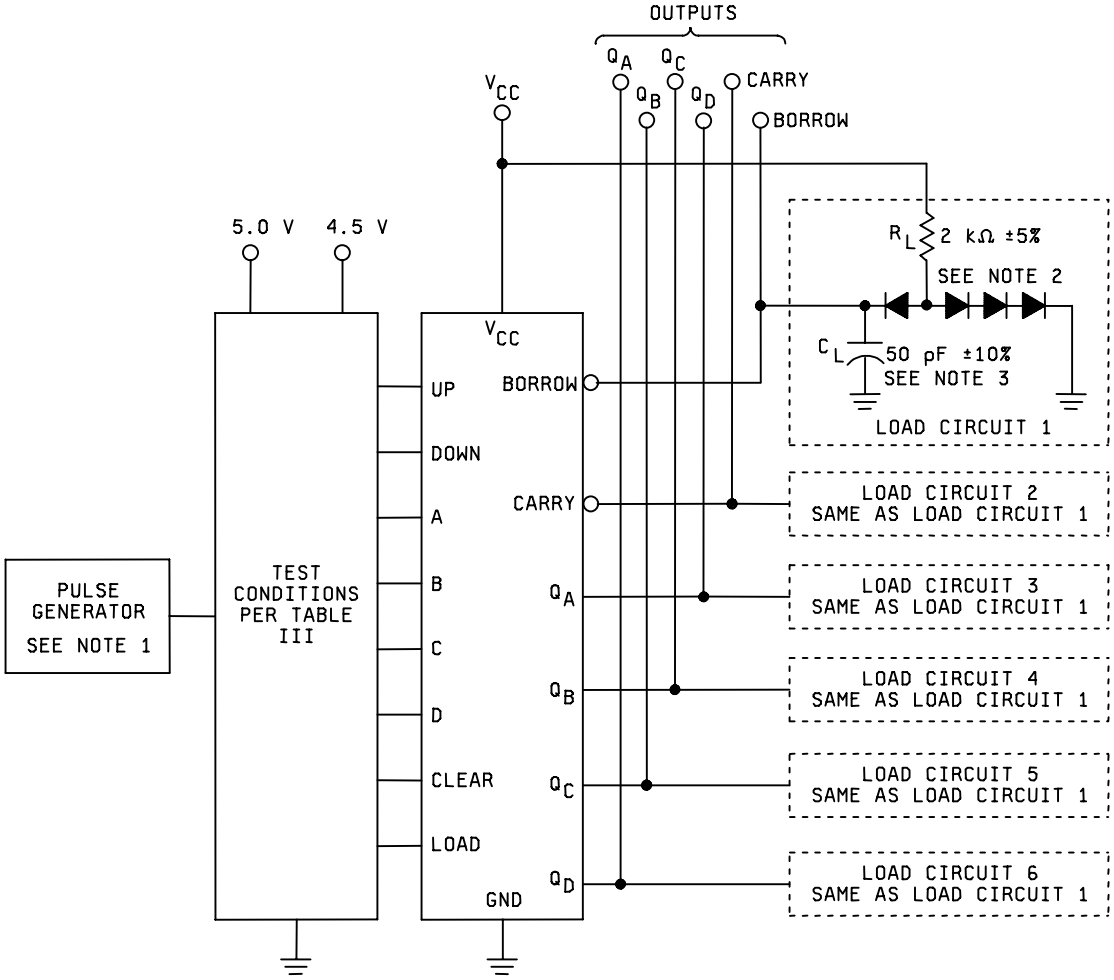

NOTES:
1. The load and count pulse generators have the following characteristics: V_{gen} = 3 V, t_p = .5 µs, PRR ≤ 1 MHz, Z_{out} ≈ 50Ω, t_r ≤ 15 ns, t_f ≤ 6 ns between 0.7 V and 2.7 V.
2. All diodes are 1N3064 or equivalent.
3. C_L includes probe and jig capacitance.
4. Voltage values are with respect to ground terminal.
5. F_{MAX}: $t_r = t_f \leq 6$ ns.
6. The clear pulse generator has the following characteristics: V_{gen} = 3.0 V, $t_r \leq 15$ ns, $t_f \leq 6$ ns, between 0.7 V and 2.7 V, $t_{w(CLEAR)}$ = 20 ns.

FIGURE 9. Switching time test circuit and waveforms for device type 08 – Continued.

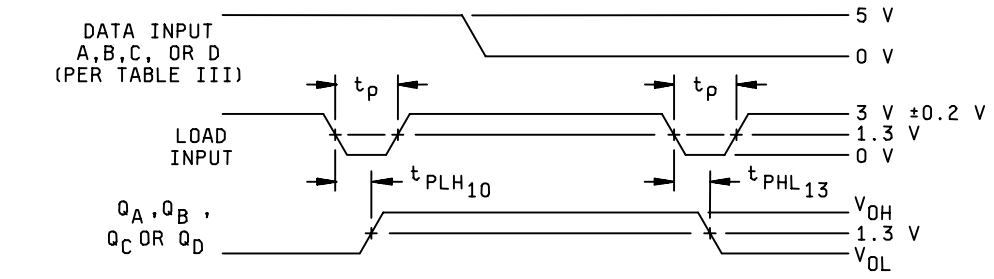

PARALLEL LOADED VOLTAGE WAVEFORMS

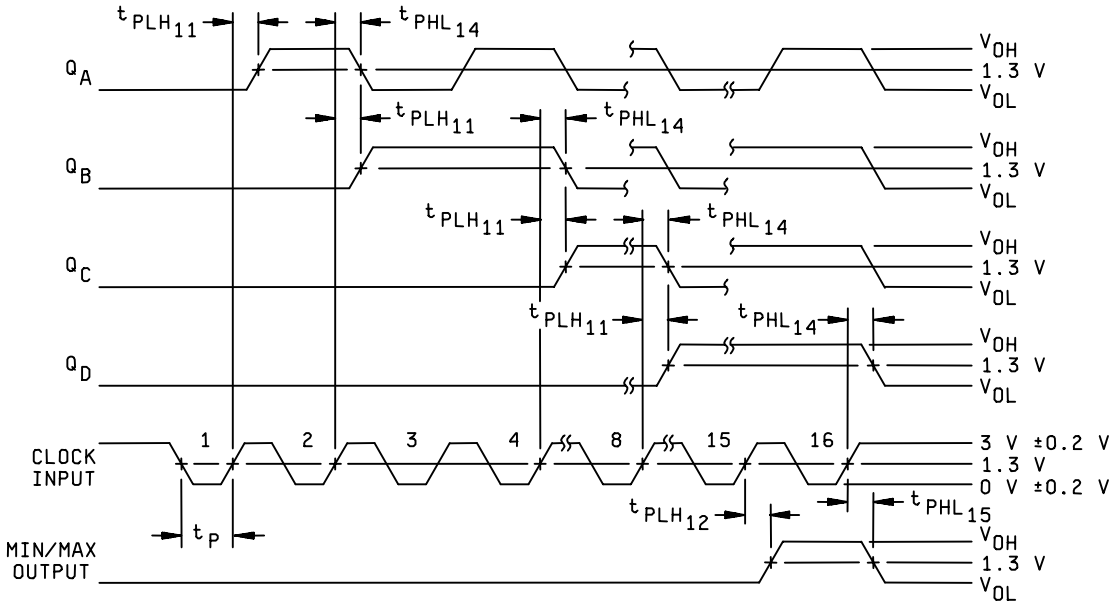

SERIAL LOADED VOLTAGE WAVEFORMS
(COUNT UP MODE)

FIGURE 10. Switching time test circuit and waveforms for device type 09.

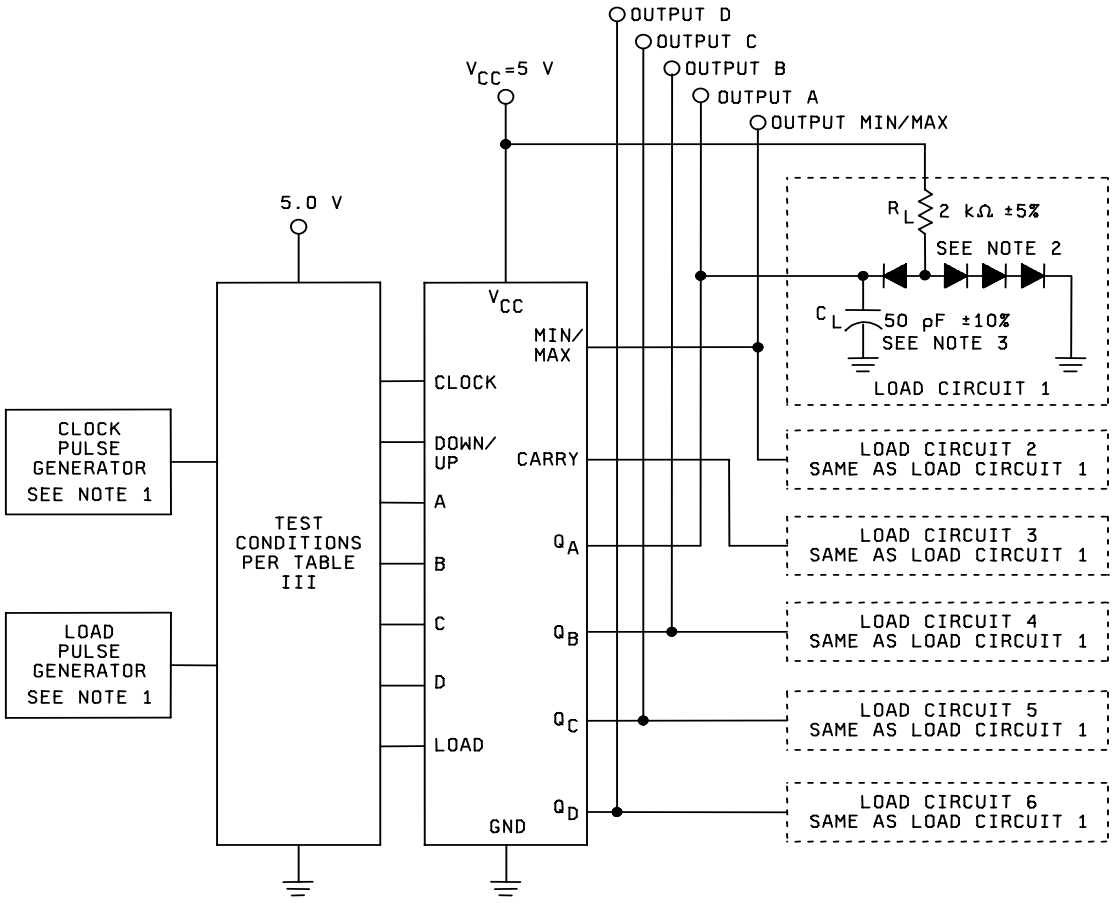

TEST CIRCUIT

NOTES:
1. The pulse generator has the following characteristics: V_{gen} = 3 V, t_p = .5 µs, PRR ≤ 1 MHz, Z_{out} ≈ 50Ω, t_r ≤ 15 ns, t_f ≤ 6 ns between 0.7 V and 2.7 V.
2. All diodes are 1N3064 or equivalent.
3. C_L includes probe and jig capacitance.
4. Voltage values are with respect to ground terminal.
5. F_{MAX}: $t_r = t_f \leq 6$ ns.

FIGURE 10. Switching time test circuit and waveforms for device type 09 – Continued.

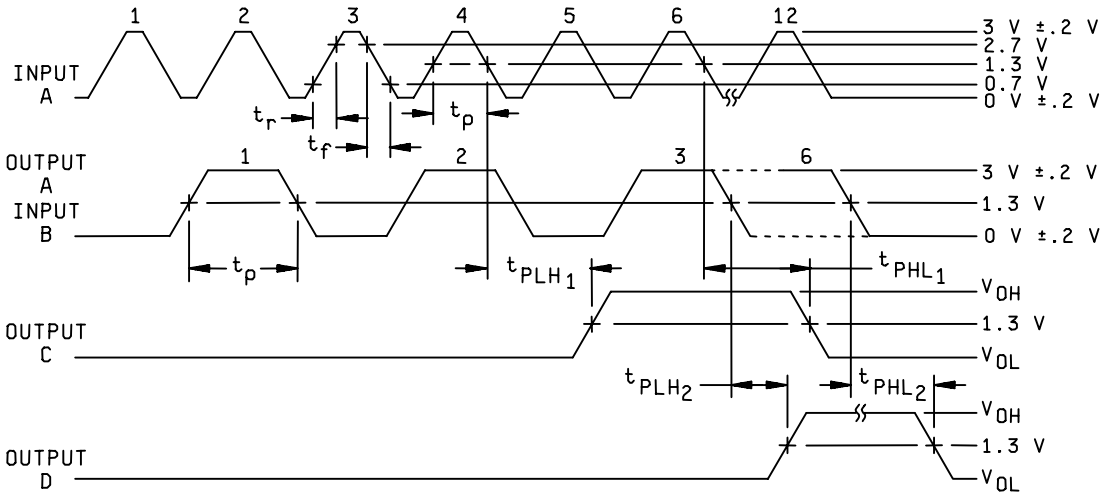

VOLTAGE WAVEFORMS

FIGURE 11. Switching time test circuit and waveforms for device type 10.

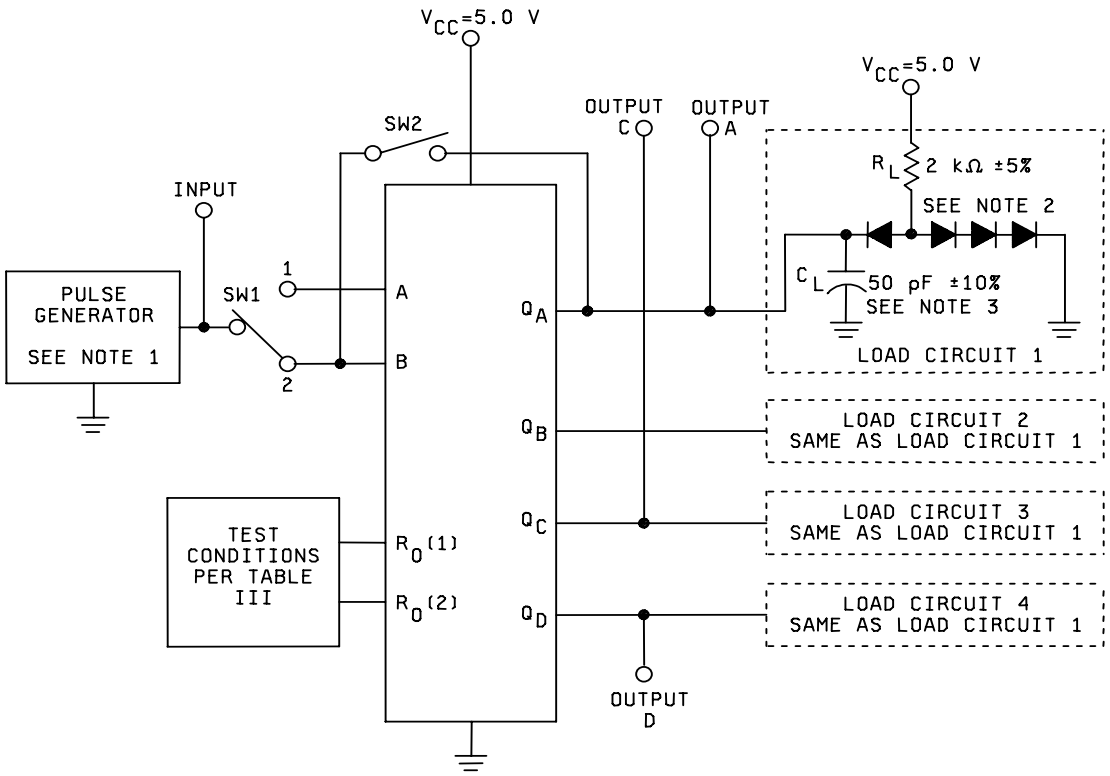

TEST	SWITCH POSITION	
	SW1	SW2
F MAX	1	CLOSED
A TO Q_C	1	CLOSED
B TO Q_D	2	OPEN

TEST CIRCUIT

NOTES:
1. The pulse generator has the following characteristics: V_{gen} = 3 V, $t_r \leq 15$ ns, $t_f \leq 6$ ns, t_p = .5 µs, PRR ≤ 1 MHz, $Z_{out} \approx 50\Omega$.
2. All diodes are 1N3064 or equivalent.
3. C_L includes probe and jig capacitance.
4. Voltage values are with respect to ground terminal.
5. F_{MAX}: $t_r = t_f \leq 6$ ns.

FIGURE 11. Switching time test circuit and waveforms for device type 10 – Continued.

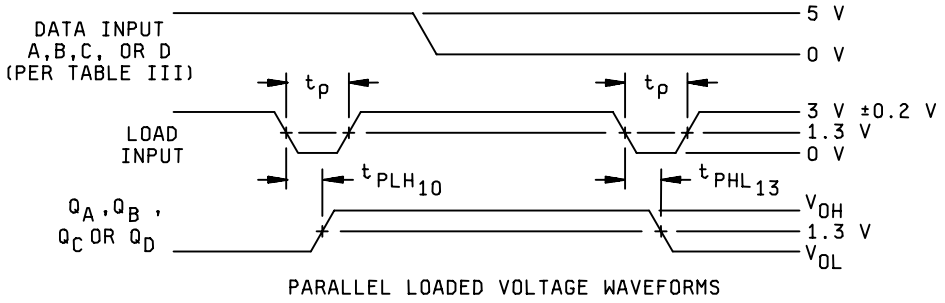

PARALLEL LOADED VOLTAGE WAVEFORMS

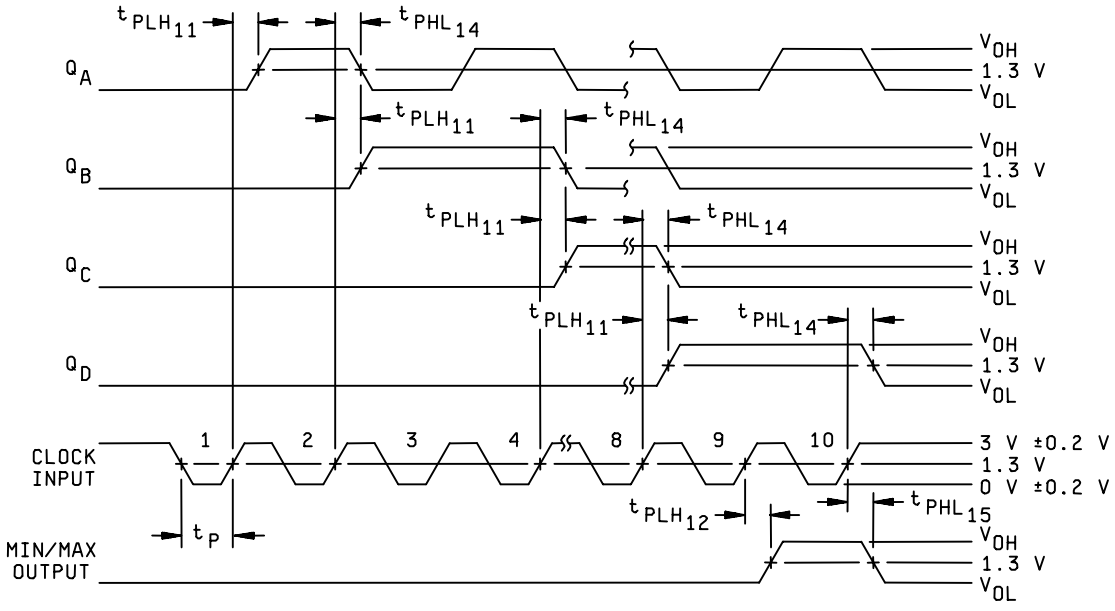

SERIAL LOADED VOLTAGE WAVEFORMS
(COUNT UP MODE)

FIGURE 12. Switching time test circuit and waveforms for device type 13.

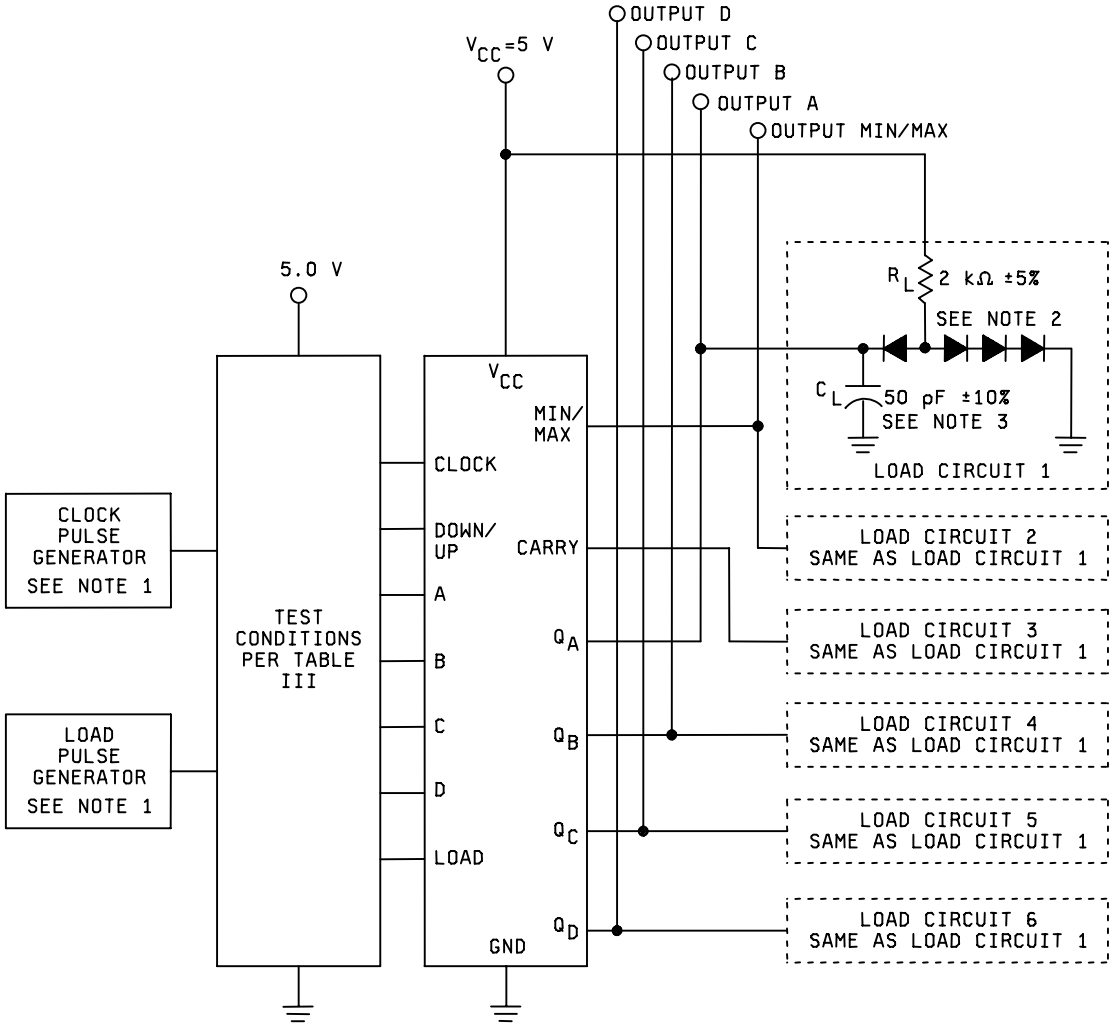

NOTES:
1. The pulse generator have the following characteristics: V_{gen} = 3 V, t_p = .5 µs, PRR ≤ 1 MHz, Z_{out} ≈ 50Ω, t_r ≤ 15 ns, t_f ≤ 6 ns, between 0.7 V and 2.7 V.
2. All diodes are 1N3064 or equivalent.
3. C_L includes probe and jig capacitance.
4. Voltage values are with respect to ground terminal.
5. F_{MAX}: $t_r = t_f \leq 6$ ns.

Figure 12. Switching time test circuit and waveforms for device type 13 - Continued.

TABLE III. Group A inspection for device type 01.

Terminal conditions (pins not designated may be H ≥ 2.0 V; or L ≤ 0.7 V; or open).

Subgroup	Symbol	MIL-STD-883 method	Cases A,B,C,D	1	2	3	4	5	6	7	8	9	10	11	12	13	14	Measured	Limits		Unit
			Cases 1/ 2	2	3	4	6	8	9	10	12	13	14	16	18	19	20				
			Test no.	B	$R_O(1)$	$R_O(2)$	NC	V_{CC}	R9(1)	R9(2)	Q_C	Q_B	GND	Q_D	Q_A	NC	A	terminal	Min	Max	
1 Tc = 25°C	V_{OL}	3007	1	2.0 V	2.0 V	2.0 V		4.5 V	GND	GND	4mA		GND				GND	Q_C		0.4	V
	"	"	2	"	"	"		"	GND	GND		4 mA	"				"	Q_B		"	"
	"	"	3	"	"	"		"	2.0 V	0.7 V			"	4 mA			"	Q_D		"	"
	"	"	4	GND	"	"		"	0.7 V	2.0 V			"		2/		2.0 V	Q_A		"	"
	"	"	5	2.0 V	"	0.7 V		"	2.0 V	"	4 mA		"				GND	Q_C		"	"
	"	"	6	2.0 V	0.7 V	2.0 V		"	"	"		4 mA	"				"	Q_B		"	"
	V_{OH}	3006	7	2.0 V	2.0 V	0.7 V		"	"	"			"	-0.4 mA			"	Q_D	2.5		"
	"	"	8	GND	0.7 V	2.0 V		"	"	"			"		-0.4 mA		2.0 V	Q_A	"		"
	"	"	9	2.0 V	"	0.7 V		"	"	"			"	-0.4 mA			GND	Q_D	"		"
	"	"	10	GND	"	0.7 V		"	"	"			"		-0.4 mA		2.0 V	Q_A	"		"
	"	"	11	3/ 4/	3/	3/		"	0.7 V	0.7 V	-0.4 mA		"				GND	Q_C	"		"
	"	"	12	3/ 5/	3/	3/		"	0.7 V	0.7 V		-0.4 mA	"				GND	Q_B	"		"
	I_{IL1}	3009	13		0.4 V	5.5 V		5.5 V					"					$R_O(1)$	6/	6/	mA
	"	"	14		5.5 V	0.4 V		"					"					$R_O(2)$	"	"	"
	"	"	15					"	0.4 V	5.5 V			"					R9(1)	"	"	"
	"	"	16					"	5.5 V	0.4 V			"					R9(2)	"	"	"
	I_{IL2}		17		GND	GND		"	3/	3/			"				0.4 V	A	"	"	"
	I_{IL3}		18	0.4 V	GND	GND		"	3/	3/			"					B	"	"	"
	V_{IC}		19					4.5 V	-18 mA				"					R9(1)		-1.5	V
			20					"		-18 mA			"					R9(2)		"	"
			21					"					"				-18 mA	A		"	"
			22	-18 mA				"					"					B		"	"
			23		-18 mA			"					"					$R_O(1)$		"	"
			24			-18 mA		"					"					$R_O(2)$		"	"
	I_{IH1}	3010	25					5.5 V	2.7 V				"					R9(1)		20	µA
	"	"	26					"		2.7 V			"					R9(2)		"	"
	"	"	27		2.7 V			"					"					$R_O(1)$		"	"
	"	"	28			2.7 V		"					"					$R_O(2)$		"	"
	I_{IH2}	"	29					"	5.5 V				"					R9(1)		100	"
	"	"	30					"		5.5 V			"					R9(2)		"	"
	"	"	31		5.5 V			"					"					$R_O(1)$		"	"
	"	"	32			5.5 V		"					"					$R_O(2)$		"	"
	I_{IH3}	"	33					"					"				2.7 V	A		80	"
	I_{IH4}	"	34					"					"				5.5 V	A		400	"
	I_{IH5}	"	35	2.7 V				"					"					B		160	"
	I_{IH6}	"	36	5.5 V				"					"					B		800	"

See footnotes at end of device types 01.

TABLE III. Group A inspection for device type 01 - Continued

Terminal conditions (pins not designated may be H ≥ 2.0 V or L ≤ 0.7 V or open).

Subgroup	Symbol	MIL-STD-883 method	Cases A,B,C,D	1	2	3	4	5	6	7	8	9	10	11	12	13	14	Measured terminal	Limits		Unit
			Cases 1/ 2	2	3	4	6	8	9	10	12	13	14	16	18	19	20				
			Test no.	B	R_O(1)	R_O(2)	NC	V_{CC}	R9(1)	R9(2)	Q_C	Q_B	GND	Q_D	Q_A	NC	A		Min	Max	
1 Tc = 25°C	I_{OS}	3011	37		GND	GND		5.5 V	5.5 V	5.5 V			GND	GND				Q_D	-15	-100	mA
		"	38		GND	GND		"	5.5 V	5.5 V			"		GND			Q_A	"	"	"
		"	39	3/ 5/	3/	3/		"	GND	GND		GND	"				GND	Q_B	"	"	"
		"	40	3/ 4/	"	"		"	"	"	GND		"				"	Q_C	"	"	"
	I_{CC}		41	GND	"	"		"	"	"			"				"	V_{CC}		15	"
2	Same tests, terminal conditions, and limits as for subgroup 1, except T_C = 125°C and V_{IC} tests are omitted.																				
3	Same tests, terminal conditions, and limits as for subgroup 1, except T_C = -55°C and V_{IC} tests are omitted.																				
7 T_C = +25°C	Func-tional tests 7/	3014	42	A 8/	A 8/	A 8/		4.5 V	A	A	L	L	GND	H	H		B 8/	See 9/			
		"	43	B	"	"		"	A	A	"	"	"	H	H		"				
		"	44	B	"	"		"	B	B	"	"	"	L	L		"				
		"	45	A	B	B		"	A	A	"	"	"	H	H		"				
		"	46	B	B	B		"	A	A	"	"	"	H	H		"				
		"	47	B	A	A		"	B	B	"	"	"	L	L		"				
		"	48	A	A	"		"	"	B	"	"	"	"	"		"				
		"	49	B	A	"		"	"	A	"	"	"	"	"		"				
		"	50	A	A	"		"	"	"	"	"	"	"	"		"				
		"	51	B	A	"		"	"	"	"	"	"	"	"		"				
		"	52	A	B	"		"	"	"	"	"	"	"	"		"				
		"	53	B	B	"		"	"	"	"	H	"	"	"		"				
		"	54	A	"	"		"	"	"	"	H	"	"	"		"				
		"	55	B	"	"		"	"	"	H	L	"	"	"		"				
		"	56	A	"	"		"	"	"	"	L	"	"	"		"				
		"	57	B	"	"		"	"	"	"	H	"	"	"		"				
		"	58	A	"	"		"	"	"	"	H	"	"	"		"				
		"	59	B	"	"		"	"	"	L	L	"	H	"		"				
		"	60	A	"	"		"	"	"	"	"	"	H	"		"				
		"	61	B	"	"		"	"	"	"	"	"	L	"		"				
		"	62	B	"	B		"	"	B	"	"	"	"	"		"				
		"	63	A	"	"		"	A	"	"	"	"	"	"		"				
		"	64	B	A	"		"	"	"	"	H	"	"	"		"				
		"	65	A	"	"		"	"	"	"	H	"	"	"		"				
		"	66	B	"	"		"	"	"	H	L	"	"	"		"				
		"	67	A	"	"		"	"	"	"	L	"	"	"		"				
		"	68	B	"	"		"	"	"	"	H	"	"	"		"				
		"	69	A	"	"		"	"	"	"	H	"	"	"		"				
		"	70	B	"	"		"	"	"	L	L	"	H	"		"				
		"	71	A	"	"		"	"	"	"	"	"	H	"		"				
		"	72	B	"	"		"	"	"	"	"	"	L	"		"				
		"	73	B	B	"		"	B	"	"	"	"	"	"		"				
		"	74	A	B	"		"	"	"	"	"	"	"	"		"				
		"	75	B	A	"		"	"	A	"	H	"	"	"		"				
		"	76	A	"	"		"	"	"	"	H	"	"	"		"				
		"	77	B	"	"		"	"	"	H	L	"	"	"		"				
		"	78	A	"	"		"	"	"	"	L	"	"	"		"				
		"	79	B	"	"		"	"	"	"	H	"	"	"		"				
		"	80	B	"	A		"	"	B	L	L	"	"	"		"				
		"	81	B	B	"		"	A	"	"	"	"	"	"		"				
		"	82	A	"	"		"	"	"	"	"	"	"	"		"				
		"	83	B	"	"		"	"	"	"	H	"	"	"		"				
		"	84	A	"	"		"	"	"	"	H	"	"	"		"				
		"	85	B	"	"		"	"	"	H	L	"	"	"		"				

See footnotes at end of device type 01.

TABLE III. Group A inspection for device type 01 - Continued
Terminal conditions (pins not designated may be H ≥ 2.0 V or L ≤ 0.7 V or open).

Subgroup	Symbol	MIL-STD-883 method	Cases A,B,C,D Cases 1/ 2 Test no.	1 2 B	2 3 $R_O(1)$	3 4 $R_O(2)$	4 6 NC	5 8 V_{CC}	6 9 R9(1)	7 10 R9(2)	8 12 Q_C	9 13 Q_B	10 14 GND	11 16 Q_D	12 18 Q_A	13 19 NC	14 20 A	Measured terminal	Limits Min	Limits Max	Unit
7 T_C = +25°C	Func-tional tests 7/	3014	86	A 8/	B 8/	A		4.5 V	A	B	H	L	GND	L	L		B	See 9/			
		"	87	B	"	A		"	"	B	H	H	"	L	L		"				
		"	88	A	"	B		"	"	A	L	L	"	H	H		"				
		"	89	"	"	B		"	"	B	"	"	"	H	H		"				
		"	90	"	A	A		"	B	"	"	"	"	L	L		"				
		"	91	B	A	A		"	"	"	"	"	"	"	"		"				
		"	92	A	B	B		"	"	"	"	"	"	"	"		"				
		"	93	B	"	"		"	"	"	"	H	"	"	"		"				
		"	94	A	"	"		"	"	"	"	H	"	"	"		"				
		"	95	B	"	"		"	"	"	H	L	"	"	"		"				
		"	96	A	"	"		"	"	"	"	L	"	"	"		"				
		"	97	B	"	"		"	"	"	"	H	"	"	"		"				
		"	98	A	"	"		"	"	"	"	H	"	"	"		"				
		"	99	B	A	A		"	"	"	L	L	"	"	"		"				
		"	100	B	B	B		"	"	"	"	"	"	"	"		"				
		"	101	A	"	"		"	"	"	"	"	"	"	"		"				
		"	102	B	"	"		"	"	"	"	H	"	"	"		"				
		"	103	A	"	"		"	"	"	"	H	"	"	"		"				
		"	104	B	"	"		"	"	"	H	L	"	"	"		"				
		"	105	A	"	"		"	"	"	"	L	"	"	"		"				
		"	106	B	"	"		"	"	"	"	H	"	"	"		"				
		"	107	A	"	"		"	"	"	"	H	"	"	"		"				
		"	108	A	"	"		"	A	A	L	L	"	H	H		"				
		"	109	B	"	"		"	A	A	"	"	"	"	"		"				
		"	110	B	"	"		"	B	B	"	"	"	"	"		"				
		"	111	A	"	"		"	"	"	"	"	"	"	"		"				
		"	112	A	A	A		"	"	"	"	"	"	L	L		"				
		"	113	B	A	A		"	"	"	"	"	"	"	"		"				
		"	114	"	B	B		"	"	"	"	"	"	"	"		A				
		"	115	"	"	"		"	"	"	"	"	"	"	H		B				
		"	116	"	"	"		"	"	"	"	"	"	"	H		A				
		"	117	"	"	"		"	"	"	"	"	"	"	L		B				
		"	118	"	"	A		"	"	"	"	"	"	"	"		A				
		"	119	"	A	A		"	"	"	"	"	"	"	"		B				
		"	120	"	A	B		"	"	"	"	"	"	"	"		A				
		"	121	"	B	"		"	"	A	"	"	"	"	H		B				
		"	122	"	"	"		"	"	"	"	"	"	"	"		A				
		"	123	"	"	"		"	A	"	"	"	"	H	"		B				
		"	124	"	A	"		"	"	B	"	"	"	"	"		A				
		"	125	"	A	A		"	"	A	"	"	"	"	"		B				
8	Same tests, terminal conditions, and limits as for subgroup 7, except T_C = 125°C and -55°C.																				
9 T_C = +25°C	F_{MAX}	3003 (Fig. 4)	126		GND			5.0 V	GND				GND		OUT		IN 10/	A to Q_A	29		MHz
	t_{PLH1}	"	127		11/	A 8/		"	"		OUT		"				IN	A to Q_C	3	53	ns
	t_{PHL1}	"	128		GND			"	"		OUT		"				IN	A to Q_C	"	58	"
	t_{PLH2}	"	129	IN	11/	A		"	"				"	OUT				B to Q_D	"	37	"
	t_{PHL2}	"	130	IN	GND			"	"				"	OUT				B to Q_D	"	40	"
10 T_C = +125°C	F_{MAX}	"	131		GND			"	"				"		OUT		IN 10/	A to Q_A	29		MHz
	t_{PLH1}	"	132		11/	A		"	"		OUT		"				IN	A to Q_C	3	74	ns
	t_{PHL1}	"	133		GND			"	"		OUT		"				IN	A to Q_C	"	81	"
	t_{PLH2}	"	134	IN	11/	A		"	"				"	OUT				B to Q_D	"	52	"
	t_{PHL2}	"	135	IN	GND			"	"				"	OUT				B to Q_D	"	56	"
11	Same tests, terminal conditions, and limits as for subgroup 10, except T_C = -55°C.																				

See footnotes at end of device type 01.

1/ Case 2 pins not referenced are N/C.

2/ Test 4, Pin 12; 4 mA + $I_{IL3(MAX)}$.

3/ Apply 4.5 V pulse then ground prior to taking measurements to set device in the desired state.

4/ Apply two pulses after R_O (reset) pulse.

5/ Apply one pulse after R_O (reset) pulse.

6/ I_{IL} limits (mA) min/max values for circuits shown:

Parameter	Terminals	Circuits						
		A	B	C	D	E	F	G
I_{IL1}	R_O(1)	-12/-.36	-.03/-.40		-.03/-.40	-12/-.36	-12/-.36	
	R_O(2)	"	"		"	"	"	
	R9(1)	"	"		"	"	"	
	R9(2)	"	"		"	"	"	
I_{IL2}	A	-0.5/-2.0	-1.0/-2.4		-1.0/-2.4	-1.0/-2.4	-0.5/-2.0	
I_{IL3}	B	-0.4/-1.6	-1.3/-3.2		-1.3/-3.2	-1.3/-3.2	-1.0/-2.4	

7/ Only a summary of attributes data is required.

8/ A = 3.0 V minimum, B = 0.0 V or GND.

9/ H > 1.5 V; L < 1.5 V.

10/ F_{MAX} minimum limit specified is the frequency of the input pulse. The output pulse shall be one-half of the input frequency.

11/ Momentary 3.0 V (min), then ground. Maintain ground for measurement.

TABLE III. Group A inspection for device type 02.

Terminal conditions (pins not designated may be H ≥ 2.0 V; or L ≤ 0.7 V; or open).

Subgroup	Symbol	MIL-STD-883 method	Cases A,B,C,D	1	2	3	4	5	6	7	8	9	10	11	12	13	14	Measured terminal	Limits		Unit
			Cases 1/ 2	2	3	4	6	8	9	10	12	13	14	16	18	19	20		Min	Max	
			Test no.	B	$R_O(1)$	$R_O(2)$	NC	V_{CC}	NC	NC	Q_C	Q_B	GND	Q_D	Q_A	NC	A				
1 Tc = 25°C	V_{OL}	3007	1	GND	2.0 V	2.0 V		4.5 V					GND		2/		2.0 V	Q_A		0.4	V
		"	2	2.0 V	"	"		"				4 mA	"				GND	Q_B		"	"
		"	3	"	"	"		"			4mA		"				"	Q_C		"	"
		"	4	"	"	"		"					"	4 mA			"	Q_D		"	"
	V_{OH}	3006	5	GND	3/	3/		"					"		-0.4 mA		3/ 4/	Q_A	2.5		"
		"	6	3/ 4/	3/	"		"				-0.4 mA	"				GND	Q_B	"		"
		"	7	3/ 5/	"	"		"			-0.4 mA		"				"	Q_C	"		"
		"	8	3/ 6/	"	"		"					"	-0.4 mA			"	Q_D	"		"
	V_{IC}		9					"					"				-18 mA	A		-1.5 mA	"
			10	-18 mA				"					"					B		"	"
			11		-18 mA			"					"					$R_O(1)$		"	"
			12			-18 mA		"					"					$R_O(2)$		"	"
	I_{IL1}	3009	13		0.4 V	5.5 V		5.5 V					"					$R_O(1)$	7/	7/	mA
		"	14		5.5 V	0.4 V		"					"					$R_O(2)$	"	"	"
	I_{IL2}	"	15		3/	3/		"					"				0.4 V	A	"	"	"
	I_{IL3}	"	16	0.4 V	3/	3/		"					"					B	"	"	"
	I_{IH1}	3010	17		2.7 V	GND		"					"					$R_O(1)$		20	µA
	I_{IH1}	"	18		GND	2.7 V		"					"					$R_O(2)$		20	"
	I_{IH2}	"	19		5.5 V	GND		"					"					$R_0(1)$		100	"
	I_{IH2}	"	20		GND	5.5 V		"					"					$R_0(2)$		100	"
	I_{IH3}	"	21		5.5 V	"		"					"				2.7 V	A		80	"
	I_{IH4}	"	22		"	"		"					"				5.5 V	A		400	"
	I_{IH5}	"	23	2.7 V	"	"		"					"					B		80	"
	I_{IH6}	"	24	5.5 V	"	"		"					"					B		400	"
	I_{OS}	3011	25	GND	3/	3/		"					"		GND		3/ 4/	Q_A	-15	-100	mA
		"	26	3/ 4/	"	"		"				GND	"				GND	Q_B	"	"	"
		"	27	3/ 5/	"	"		"			GND		"				"	Q_C	"	"	"
		"	28	3/ 6/	"	"		"					"	GND			"	Q_D	"	"	"
	I_{CC}	3005	29	GND				"					"					V_{CC}		15	"
2	Same tests, terminal conditions, and limits as for subgroup 1, except T_C = 125°C and V_{IC} tests are omitted.																				
3	Same tests, terminal conditions, and limits as for subgroup 1, except T_C = -55°C and V_{IC} tests are omitted.																				

See footnotes at end of device types 02.

TABLE III. Group A inspection for device type 02 - Continued

Terminal conditions (pins not designated may be H ≥ 2.0 V or L ≤ 0.7 V or open).

Subgroup	Symbol	MIL-STD-883 method	Cases A,B,C,D Cases 1/ 2 Test no.	1 2 B	2 3 R_O(1)	3 4 R_O(2)	4 6 NC	5 8 V_{CC}	6 9 NC	7 10 NC	8 12 Q_C	9 13 Q_B	10 14 GND	11 16 Q_D	12 18 Q_A	13 19 NC	14 20 A	Measured terminal	Limits Min	Limits Max	Unit
7	Func-	3014	30	B 9/	A 9/	A		4.5 V			L	L	GND	L	L		B 9/				
Tc = 25°C	tional	"	31	A	"	"		"			"	"	"	"	"		"				
	tests	"	32	B	"	"		"			"	"	"	"	"		"				
	8/	"	33	B	"	B		"			"	"	"	"	"		"				
		"	34	A	"	"		"			"	"	"	"	"		"				
		"	35	B	"	"		"			"	H	"	"	"		"				
		"	36	"	"	A		"			"	L	"	"	"		"				
		"	37	"	B	"		"			"	"	"	"	"		"				
		"	38	A	"	"		"			"	"	"	"	"		"				
		"	39	A	"	B		"			"	"	"	"	"		"				
		"	40	B	"	"		"			"	H	"	"	"		"				
		"	41	A	"	"		"			"	H	"	"	"		"				
		"	42	B	"	"		"			H	L	"	"	"		"				
		"	43	A	"	"		"			"	L	"	"	"		"				
		"	44	B	"	"		"			"	H	"	"	"		"				
		"	45	A	"	"		"			"	H	"	"	"		"				
		"	46	B	"	"		"			L	L	"	H	"		"				
		"	47	A	"	"		"			"	L	"	"	"		"				
		"	48	B	"	"		"			"	H	"	"	"		"	See 10/			
		"	49	A	"	"		"			"	H	"	"	"		"				
		"	50	B	"	"		"			H	L	"	"	"		"				
		"	51	A	"	"		"			"	L	"	"	"		"				
		"	52	B	"	"		"			"	H	"	"	"		"				
		"	53	A	"	"		"			"	H	"	"	"		"				
		"	54	B	"	"		"			L	L	"	L	"		"				
		"	55	A	"	"		"			"	L	"	"	"		"				
		"	56	B	"	"		"			"	H	"	"	"		"				
		"	57	A	"	"		"			"	H	"	"	"		"				
		"	58	B	"	"		"			H	L	"	"	"		"				
		"	59	A	"	"		"			"	L	"	"	"		"				
		"	60	B	"	"		"			"	H	"	"	"		"				
		"	61	A	"	"		"			"	H	"	"	"		"				
		"	62	B	"	"		"			L	L	"	H	"		"				
		"	63	A	"	"		"			"	L	"	"	"		"				
		"	64	B	"	"		"			"	H	"	"	"		"				
		"	65	B	A	"		"			"	"	"	"	"		"				
		"	66	A	"	"		"			"	"	"	"	"		"				
		"	67	B	"	"		"			H	L	"	"	"		"				
		"	68	A	"	"		"			"	L	"	"	"		"				
		"	69	B	"	"		"			"	H	"	"	"		"				
		"	70	A	"	"		"			"	H	"	"	"		"				
		"	71	A	"	A		"			L	L	"	L	"		"				
		"	72	B	"	A		"			"	"	"	"	"		"				
		"	73	"	B	B		"			"	"	"	"	"		A				
		"	74	"	"	"		"			"	"	"	"	H		B				
		"	75	"	"	"		"			"	"	"	"	H		A				
		"	76	"	"	"		"			"	"	"	"	L		B				
8	Same tests, terminal conditions, and limits as for subgroup 7, except T_C = +125°C and -55°C.																				
9	F_{MAX}	3003 (Fig. 5)	77		GND			5.0 V					GND		OUT		IN 11/	A to Q_A	29		MHz
T_C = +25°C	t_{PLH1}	"	78		12/	A 9/		"			OUT		"				IN	A to Q_C	3	53	ns
	t_{PHL1}	"	79		GND			"			OUT		"				IN	A to Q_C	"	58	"
	t_{PLH2}	"	80	IN	12/	A		"					"	OUT				B to Q_D	"	56	"
	t_{PHL1}	"	81	IN	GND			"					"	OUT				B to Q_D	"	56	"

See footnotes at end of device type 02.

TABLE III. Group A inspection for device type 02 - Continued
Terminal conditions (pins not designated may be H ≥ 2.0 V or L ≤ 0.7 V or open).

Subgroup	Symbol	MIL-STD-883 method	Cases A,B,C,D	1	2	3	4	5	6	7	8	9	10	11	12	13	14	Measured terminal	Limits		Unit
			Cases 1/ 2	2	3	4	6	8	9	10	12	13	14	16	18	19	20				
			Test no.	B	$R_O(1)$	$R_O(2)$	NC	V_{CC}	NC	NC	Q_C	Q_B	GND	Q_D	Q_A	NC	A		Min	Max	
10 T_C = +125°C	F_{MAX}	3003 (Fig. 5)	82		GND			5.0 V					GND		OUT		IN 11/	A to Q_A	29		MHz
	t_{PLH1}	"	83		12/	A		"			OUT		"				IN	A to Q_C	3	74	ns
	t_{PHL1}	"	84		GND			"			OUT		"				IN	A to Q_C	"	81	"
	t_{PLH2}	"	85	IN	12/	A		"					"	OUT				B to Q_D	"	78	"
	t_{PHL2}	"	86	IN	GND			"					"	OUT				B to Q_D	"	78	"
11	Same tests, terminal conditions, and limits as for subgroup 10 except, T_C = 55°C																				

1/ Case 2 pins not referenced are N/C.

2/ For test 1, 4 mA $+I_{IL3}$ (max).

3/ Apply 4.5 V pulse, then ground prior to taking measurements to set device in the desired state. Maintain ground for measurement.

4/ Input pulse must be applied one time after R_O pulse.

5/ Input pulse must be applied twice after R_O pulse.

6/ Input pulse must be applied four times after R_O pulse.

7/ I_{IL} limits (mA) min/max values for circuits shown:

Parameter	Terminals	Circuits						
		A	B	C	D	E	F	G
I_{IL1}	$R_O(1)$	-12/-.36	-.03/-.40	-12/-.36	-.03/-.40	-12/-.36	-12/-.36	
	$R_O(2)$	"	"	"	"	"	"	
I_{IL2}	A	-0.5/-2.0	-1.0/-2.4	-0.5/-2.0	-1.0/-2.4	-1.0/-2.4	-0.5/-2.0	
I_{IL3}	B	-0.4/-1.6	-0.4/-1.6	-0.4/-1.6	-0.4/-1.6	-.65/-1.6	-0.4/-1.6	

8/ Only a summary of attributes data is required.

9/ A = 3.0 V minimum; B = 0.0 V or GND.

10/ H > 1.5 V; L < 1.5 V.

11/ F_{MAX} min limit specified is the frequency of the input pulse. The output frequency shall be one-half the input frequency.

12/ Momentary 3.0 V (min), then ground. Maintain ground for measurement.

TABLE III. Group A inspection for device types 03, 04, 11, and 12.

Terminal conditions (pins not designated may be H ≥ 2.0 V; or L ≤ 0.7 V; or open).

Subgroup	Symbol	MIL-STD-883 method	Cases E, F	1	2	3	4	5	6	7	8	9	10	11	12	13	14	15	16	Measured terminal	Limits		Unit
			Cases 1/ 2	2	3	4	5	7	8	9	10	12	13	14	15	17	18	19	20		Min	Max	
			Test no.	Clear	Clock	A	B	C	D	EnP	GND	Load	EnT	Q_D	Q_C	Q_B	Q_A	Ripple carry	V_{CC}				
1 Tc = +25°C	V_{OL}	3007	1	4.5 V	2/				0.7 V		GND	GND		4 mA					4.5 V	Q_D		0.4	V
		"	2	"	"			0.7 V			"	"			4 mA				"	Q_C		"	"
		"	3	"	"		0.7 V				"	"				4 mA			"	Q_B		"	"
		"	4	"	"	0.7 V					"	"					4 mA		"	Q_A		"	"
		"	5	"							"	"	0.7 V					4 mA	"	Ripple carry		"	"
	V_{OH}	3006	6	"	2/				2.0 V		"	GND		-.4 mA					"	Q_D	2.5		"
		"	7	"	"			2.0 V			"	"			-.4 mA				"	Q_C	"		"
		"	8	"	"		2.0 V				"	"				-.4 mA			"	Q_B	"		"
		"	9	"	"	2.0 V					"	"					-.4 mA		"	Q_A	"		"
		"	10	"	"	2.0 V	3/	3/	2.0 V		"	"	2.0 V					-.4 mA	"	Ripple carry	"		"
	V_{IC}		11	-18 mA							"								"	Clear		-1.5	"
			12		-18 mA						"								"	Clock		"	"
			13			-18 mA					"								"	A		"	"
			14				-18 mA				"								"	B		"	"
			15					-18 mA			"								"	C		"	"
			16						-18 mA		"								"	D		"	"
			17							-18 mA	"								"	EnP		"	"
			18								"	-18 mA							"	Load		"	"
			19								"		-18 mA						"	EnT		"	"
	I_{IL4}	3009	20	0.4 V							"								5.5 V	Clear	4/	4/	µA
	I_{IL6}	"	21		0.4 V						"								"	Clock	"	"	"
	I_{IL4}	"	22			0.4 V					"	GND							"	A	"	"	"
		"	23				0.4 V				"	"							"	B	"	"	"
		"	24					0.4 V			"	"							"	C	"	"	"
		"	25						0.4 V		"	"							"	D	"	"	"
		"	26							0.4 V	"	4.5 V	4.5 V						"	EnP	"	"	"
	I_{IL5}	"	27							4.5 V	"	0.4 V	4.5 V						"	Load	"	"	"
	I_{IL5}	"	28 5/							4.5 V	"	4.5 V	0.4 V						"	EnT	"	"	"
	I_{IH13}	3010	29 13/	2.7 V							"								"	Clear		20	"
	I_{IH9}	"	30		2.7 V						"								"	Clock		40	"
	I_{IH11}	"	31			2.7 V					"								"	A		20	"
		"	32				2.7 V				"								"	B		"	"
		"	33					2.7 V			"								"	C		"	"
		"	34						2.7 V		"								"	D		"	"
		"	35							2.7 V	"	GND	GND						"	EnP		"	"
	I_{IH9}	"	36							GND	"	2.7 V	GND						"	Load		40	"
	I_{IH9}	"	37							GND	"	GND	2.7 V						"	EnT		40	"

See footnotes at end of device types 03, 04, 11, and 12.

TABLE III. Group A inspection for device types 03, 04, 11, and 12 – Continued.
Terminal conditions (pins not designated may be H ≥ 2.0 V; or L ≤ 0.7 V; or open).

Subgroup	Symbol	MIL-STD-883 method	Cases E, F	1	2	3	4	5	6	7	8	9	10	11	12	13	14	15	16	Measured terminal	Limits		Unit
			Cases 1/ 2	2	3	4	5	7	8	9	10	12	13	14	15	17	18	19	20		Min	Max	
			Test no.	Clear	Clock	A	B	C	D	EnP	GND	Load	EnT	Q_D	Q_C	Q_B	Q_A	Ripple carry	V_{CC}				
1	I_{IH14}	3010	38 13/	5.5 V							GND								5.5 V	Clear		100	µA
Tc = +25°C	I_{IH10}	"	39		5.5 V						"								"	Clock		200	"
	I_{IH12}	"	40			5.5 V					"								"	A		100	"
		"	41				5.5 V				"								"	B		"	"
		"	42					5.5 V			"								"	C		"	"
		"	43						5.5 V		"								"	D		"	"
		"	44							5.5 V	"	GND	GND						"	EnP		"	"
	I_{IH10}	"	45							GND	"	5.5 V	GND						"	Load		200	"
	I_{IH10}	"	46							GND	"	GND	5.5 V						"	EnT		200	"
	I_{OS}	3011	47	4.5 V	2/				4.5 V		"	GND		GND					"	Q_D	-15	-100	mA
		"	48	"	"			4.5 V			"	"			GND				"	Q_C	"	"	"
		"	49	"	"		4.5 V				"	"				GND			"	Q_B	"	"	"
		"	50	"	"	4.5 V					"	"					GND		"	Q_A	"	"	"
		"	51	"	"	4.5 V	6/	6/	4.5 V		"	"	4.5 V					GND	"	Ripple carry	"	"	"
	I_{CCH}	3005	52	5.5 V	5.5 V	5.5 V	5.5 V	5.5 V	5.5 V	5.5 V	"	5.5 V	5.5 V						"	V_{CC}		31	"
	I_{CCH}	"	53	5.5 V	5.5 V	5.5 V	5.5 V	5.5 V	5.5 V	5.5 V	"	GND	5.5 V						"	"		31	"
	I_{CCL}	"	54	GND	GND	GND	GND	GND	GND	GND	"	GND	GND						"	"		32	"
	I_{CCL}	"	55	GND	GND	GND	GND	GND	GND	GND	"	GND	GND						"	"		32	"
2	Same tests, terminal conditions, and limits as for subgroup 1, except T_C = 125°C and V_{IC} tests are omitted.																						
3	Same tests, terminal conditions, and limits as for subgroup 1, except T_C = -55°C and V_{IC} tests are omitted.																						

See footnotes at end of device types 03, 04, 11, and 12.

TABLE III. Group A inspection for device type 03 – Continued.
Terminal conditions (pins not designated may be H ≥ 2.0 V or L ≤ 0.7 V or open).

Subgroup	Symbol	MIL-STD-883 method	Cases E, F	1	2	3	4	5	6	7	8	9	10	11	12	13	14	15	16	Measured terminal	Limits		Unit
			Cases 1/ 2	2	3	4	5	7	8	9	10	12	13	14	15	17	18	19	20				
			Test no.	Clear	Clock	A	B	C	D	EnP	GND	Load	EnT	Q_D	Q_C	Q_B	Q_A	Ripple carry	V_{CC}		Min	Max	
7 Tc = +25°C	Func-tional tests 7/	3014	56	B 8/	A 8/	A 8/	A 8/	A	A	A	GND	A	A	L	L	L	L	L	4.5 V	See 9/			
		"	57	A	A	B	B	B	B	"	"	"	B	"	"	"	"	"	"				
		"	58	"	B	A	A	A	A	"	"	"	A	"	"	"	"	"	"				
		"	59	"	A	A	A	A	A	"	"	"	A	"	"	"	H	"	"				
		"	60	"	A	B	B	B	B	"	"	"	B	"	"	"	"	"	"				
		"	61	"	B	A	A	A	A	"	"	"	A	"	"	"	"	"	"				
		"	62	"	A	A	A	A	A	"	"	"	A	"	"	H	L	"	"				
		"	63	"	A	B	B	B	B	"	"	"	B	"	"	"	"	"	"				
		"	64	"	B	A	A	A	A	"	"	"	A	"	"	"	"	"	"				
		"	65	"	A	A	A	A	A	"	"	"	A	"	"	"	H	"	"				
		"	66	"	A	B	B	B	B	"	"	"	B	"	"	"	"	"	"				
		"	67	"	B	A	A	A	A	"	"	"	A	"	"	"	"	"	"				
		"	68	"	A	A	A	A	A	"	"	"	A	"	H	L	L	"	"				
		"	69	"	A	B	B	B	B	"	"	"	B	"	"	"	"	"	"				
		"	70	"	B	A	A	A	A	"	"	"	A	"	"	"	"	"	"				
		"	71	"	A	A	A	A	A	"	"	"	A	"	"	"	H	"	"				
		"	72	"	A	B	B	B	B	"	"	"	B	"	"	"	"	"	"				
		"	73	"	B	A	A	A	A	"	"	"	A	"	"	"	"	"	"				
		"	74	"	A	A	A	A	A	"	"	"	A	"	"	H	L	"	"				
		"	75	"	A	B	B	B	B	"	"	"	B	"	"	"	"	"	"				
		"	76	"	B	A	A	A	A	"	"	"	A	"	"	"	"	"	"				
		"	77	"	A	A	A	A	A	"	"	"	A	"	"	"	H	"	"				
		"	78	"	A	B	B	B	B	"	"	"	B	"	"	"	"	"	"				
		"	79	"	B	A	A	A	A	"	"	"	A	"	"	"	"	"	"				
		"	80	"	A	A	A	A	A	"	"	"	A	H	L	L	L	"	"				
		"	81	"	A	B	B	B	B	"	"	"	B	"	"	"	"	"	"				
		"	82	"	B	A	A	A	A	"	"	"	A	"	"	"	"	"	"				
		"	83	"	A	A	A	A	A	"	"	"	A	"	"	"	H	H	"				
		"	84	"	A	B	B	B	B	"	"	"	B	"	"	"	"	L	"				
		"	85	"	B	A	A	A	A	"	"	"	A	"	"	"	"	H	"				
		"	86	"	A	"	"	"	"	"	"	"	"	L	"	"	L	L	"				
		"	87	B	A	"	"	"	"	"	"	"	"	"	"	"	"	"	"				
		"	88	A	A	"	"	"	"	B	"	"	"	"	"	"	"	"	"				
		"	89	"	B	"	"	"	"	"	"	"	"	"	"	"	"	"	"				
		"	90	"	A	"	"	"	"	"	"	"	"	"	"	"	"	"	"				
		"	91	"	A	B	B	B	B	A	"	"	B	"	"	"	"	"	"				
		"	92	"	A	A	A	A	A	"	"	"	"	"	"	"	"	"	"				
		"	93	"	B	"	A	A	A	"	"	"	"	"	"	"	"	"	"				
		"	94	"	A	"	A	A	A	"	"	"	"	"	"	"	"	"	"				
		"	95	"	A	"	B	B	B	"	"	B	"	"	"	"	"	"	"				
		"	96	"	B	"	B	B	"	"	"	"	"	"	"	"	"	"	"				
		"	97	"	A	"	B	B	"	"	"	"	"	"	"	"	H	"	"				
		"	98	"	A	"	A	A	"	"	"	"	"	"	"	"	"	"	"				
		"	99	"	B	"	"	"	"	"	"	"	"	"	"	"	"	"	"				
		"	100	"	A	"	"	"	"	"	"	"	"	"	H	H	"	"	"				
		"	101	"	A	"	"	"	"	"	"	A	"	"	"	"	"	"	"				
		"	102	"	B	"	"	"	"	"	"	"	"	"	"	"	"	"	"				
		"	103	"	A	"	"	"	"	"	"	"	"	"	"	"	"	"	"				
		"	104	"	A	"	B	B	A	"	"	B	"	"	"	"	"	"	"				
		"	105	"	B	"	"	"	"	"	"	"	"	"	"	"	"	"	"				
		"	106	"	A	"	"	"	"	"	"	"	"	H	L	L	"	"	"				
		"	107	"	A	"	"	"	"	"	"	A	"	"	"	"	"	"	"				
		"	108	"	B	"	"	"	"	"	"	"	"	"	"	"	"	"	"				
		"	109	"	A	"	"	"	"	"	"	"	"	"	"	"	"	"	"				
		"	110	B	A	"	A	A	"	"	"	B	A	L	"	"	L	"	"				
		"	111	A	A	"	"	"	"	"	"	"	"	"	"	"	"	"	"				
		"	112	A	B	"	"	"	"	"	"	"	"	"	"	"	"	"	"				
		"	113	A	A	"	"	"	"	"	"	"	"	H	H	H	H	X	"				
		"	114	B	A	"	"	"	"	"	"	A	"	L	L	L	L	L	"				

See footnotes at end of device types 03, 04, 11, and 12.

TABLE III. Group A inspection for device type 03 – Continued.
Terminal conditions (pins not designated may be H ≥ 2.0 V or L ≤ 0.7 V or open).

Subgroup	Symbol	MIL-STD-883 method	Cases E, F	1	2	3	4	5	6	7	8	9	10	11	12	13	14	15	16	Measured terminal	Limits		Unit
			Cases 1/ 2	2	3	4	5	7	8	9	10	12	13	14	15	17	18	19	20				
			Test no.	Clear	Clock	A	B	C	D	EnP	GND	Load	EnT	Q_D	Q_C	Q_B	Q_A	Ripple carry	V_{CC}		Min	Max	
7 Tc = +25°C	Func-tional tests 7/	3014	115	A 8/	A 8/	A 8/	B 8/	B	B	B	GND	B	B	L	L	L	L	L	4.5 V	See 9/			
		"	116	"	B	"	"	"	"	"	"	"	"	"	"	"	"	L	"	"				
		"	117	"	A	"	"	"	"	"	"	"	"	"	"	"	"	H	"	"				
		"	118	"	A	B	"	"	A	A	"	"	A	"	"	"	"	"	"	"				
		"	119	"	B	"	"	"	"	"	"	"	"	"	"	"	"	"	"	"				
		"	120	"	A	"	"	"	"	"	"	"	"	H	"	"	L	"	"	"				
		"	121	"	A	"	A	"	B	B	"	"	"	"	"	"	"	"	"	"				
		"	122	"	B	"	"	"	"	"	"	"	"	"	"	"	"	"	"	"				
		"	123	"	A	"	"	"	"	"	"	"	"	L	"	H	"	"	"	"				
		"	124	"	A	"	B	A	A	"	"	"	"	"	"	"	"	"	"	"				
		"	125	"	B	"	"	"	"	"	"	"	"	"	"	"	"	"	"	"				
		"	126	"	A	"	"	"	"	"	"	"	"	H	H	L	"	"	"	"				
		"	127	"	A	"	A	"	"	"	"	"	B	"	"	"	"	"	"	"				
		"	128	"	B	"	"	"	"	"	"	"	"	"	"	"	"	"	"	"				
		"	129	"	A	"	"	"	"	"	"	"	"	"	"	H	"	"	"	"				
		"	130	"	A	A	B	B	"	A	"	"	A	"	"	"	"	"	"	"				
		"	131	"	B	"	"	"	"	"	"	"	"	"	"	"	"	"	"	"				
		"	132	"	A	"	"	"	"	"	"	"	"	"	L	L	H	H	"				
		"	133	"	A	"	A	A	B	B	"	"	B	"	"	"	"	L	"				
		"	134	"	B	"	"	"	"	"	"	"	"	"	"	"	"	"	"				
		"	135	"	A	"	"	"	"	"	"	"	"	L	H	H	"	"	"				
		"	136	"	A	B	"	B	A	A	"	"	"	"	"	"	"	"	"				
		"	137	"	B	"	"	"	"	"	"	"	"	"	"	"	"	"	"				
		"	138	"	A	"	"	"	"	"	"	"	"	H	L	"	L	"	"				
		"	139	"	A	A	"	"	B	"	"	"	A	"	"	"	"	"	"				
		"	140	"	B	"	"	"	"	"	"	"	"	"	"	"	"	"	"				
		"	141	"	A	"	"	"	"	"	"	"	"	L	"	"	H	"	"				
		"	142	"	A	B	B	A	"	"	"	"	"	"	"	"	"	"	"				
		"	143	"	B	"	"	"	"	"	"	"	"	"	"	"	"	"	"				
		"	144	"	A	"	"	"	"	"	"	"	"	"	H	L	L	"	"				
		"	145	"	A	A	"	"	"	"	"	"	"	"	"	"	"	"	"				
		"	146	"	B	"	"	"	"	"	"	"	"	"	"	"	"	"	"				
		"	147	"	A	"	"	"	"	"	"	"	"	"	"	"	H	"	"				
		"	148	"	A	B	A	"	"	"	"	"	"	"	"	"	"	"	"				
		"	149	"	B	"	"	"	"	"	"	"	"	"	"	"	"	"	"				
		"	150	"	A	"	"	"	"	"	"	"	"	"	"	H	L	"	"				
8	Repeat subgroup 7 at T_C = +125°C and T_C = -55°C.																						

See footnotes at end of device types 03, 04, 11, and 12.

TABLE III. Group A inspection for device type 04 – Continued.
Terminal conditions (pins not designated may be H ≥ 2.0 V or L ≤ 0.7 V or open).

Subgroup	Symbol	MIL-STD-883 method	Cases E, F	1	2	3	4	5	6	7	8	9	10	11	12	13	14	15	16	Measured terminal	Limits		Unit
			Cases 1/ 2	2	3	4	5	7	8	9	10	12	13	14	15	17	18	19	20				
			Test no.	Clear	Clock	A	B	C	D	EnP	GND	Load	EnT	Q_D	Q_C	Q_B	Q_A	Ripple carry	V_{CC}		Min	Max	
7	Func-	3014	56	B 8/	A 8/	A 8/	A	A	A	A 8/	GND	A	A	L	L	L	L	L	4.5 V				
Tc = +25°C	tional	"	57	A	A	B	B	B	B	"	"	"	B	"	"	"	"	"	"				
	tests	"	58	"	B	A	A	A	A	"	"	"	A	"	"	"	"	"	"				
	7/	"	59	"	A	A	A	A	A	"	"	"	A	"	"	"	H	"	"				
		"	60	"	A	B	B	B	B	"	"	"	B	"	"	"	"	"	"				
		"	61	"	B	A	A	A	A	"	"	"	A	"	"	"	"	"	"				
		"	62	"	A	A	A	A	A	"	"	"	A	"	"	H	L	"	"				
		"	63	"	A	B	B	B	B	"	"	"	B	"	"	"	"	"	"				
		"	64	"	B	A	A	A	A	"	"	"	A	"	"	"	"	"	"				
		"	65	"	A	A	A	A	A	"	"	"	A	"	"	"	H	"	"				
		"	66	"	A	B	B	B	B	"	"	"	B	"	"	"	"	"	"				
		"	67	"	B	A	A	A	A	"	"	"	A	"	"	"	"	"	"				
		"	68	"	A	A	A	A	A	"	"	"	A	"	H	L	L	"	"				
		"	69	"	A	B	B	B	B	"	"	"	B	"	"	"	"	"	"				
		"	70	"	B	A	A	A	A	"	"	"	A	"	"	"	"	"	"				
		"	71	"	A	A	A	A	A	"	"	"	A	"	"	"	H	"	"				
		"	72	"	A	B	B	B	B	"	"	"	B	"	"	"	"	"	"				
		"	73	"	B	A	A	A	A	"	"	"	A	"	"	"	"	"	"				
		"	74	"	A	A	A	A	A	"	"	"	A	"	"	H	L	"	"	See 9/			
		"	75	"	A	B	B	B	B	"	"	"	B	"	"	"	"	"	"				
		"	76	"	B	A	A	A	A	"	"	"	A	"	"	"	"	"	"				
		"	77	"	A	A	A	A	A	"	"	"	A	"	"	"	H	"	"				
		"	78	"	A	B	B	B	B	"	"	"	B	"	"	"	"	"	"				
		"	79	"	B	A	A	A	A	"	"	"	A	"	"	"	"	"	"				
		"	80	"	A	A	A	A	A	"	"	"	A	H	L	L	L	"	"				
		"	81	"	A	B	B	B	B	"	"	"	B	"	"	"	"	"	"				
		"	82	"	B	A	A	A	A	"	"	"	A	"	"	"	"	"	"				
		"	83	"	A	A	A	A	A	"	"	"	A	"	"	"	H	"	"				
		"	84	"	A	B	B	B	B	"	"	"	B	"	"	"	"	"	"				
		"	85	"	B	A	A	A	A	"	"	"	A	"	"	"	"	"	"				
		"	86	"	A	A	A	A	A	"	"	"	A	"	"	H	L	"	"				
		"	87	"	A	B	B	B	B	"	"	"	B	"	"	"	"	"	"				
		"	88	"	B	A	A	A	A	"	"	"	A	"	"	"	"	"	"				
		"	89	"	A	A	A	A	A	"	"	"	A	"	"	"	H	"	"				
		"	90	"	A	B	B	B	B	"	"	"	B	"	"	"	"	"	"				
		"	91	"	B	A	A	A	A	"	"	"	A	"	"	"	"	"	"				
		"	92	"	A	A	A	A	A	"	"	"	A	"	H	L	L	"	"				
		"	93	"	A	B	B	B	B	"	"	"	B	"	"	"	"	"	"				
		"	94	"	B	A	A	A	A	"	"	"	A	"	"	"	"	"	"				
		"	95	"	A	A	A	A	A	"	"	"	A	"	"	"	H	"	"				
		"	96	"	A	B	B	B	B	"	"	"	B	"	"	"	"	"	"				
		"	97	"	B	A	A	A	A	"	"	"	A	"	"	"	"	"	"				
		"	98	"	A	A	A	A	A	"	"	"	A	"	"	H	L	"	"				
		"	99	"	A	B	B	B	B	"	"	"	B	"	"	"	"	"	"				
		"	100	"	B	A	A	A	A	"	"	"	A	"	"	"	"	"	"				
		"	101	"	A	A	A	A	A	"	"	"	A	"	"	"	H	H	"				
		"	102	"	A	B	B	B	B	"	"	"	B	"	"	"	"	L	"				
		"	103	"	B	A	A	A	A	"	"	"	A	"	"	"	"	H	"				
		"	104	"	A	A	A	A	A	"	"	"	A	L	L	L	L	L	"				
		"	105	B	A	A	A	A	A	"	"	"	A	"	"	"	"	"	"				
		"	106	A	A	A	A	A	A	B	"	"	A	"	"	"	"	"	"				
		"	107	"	B	"	"	"	"	B	"	"	B	"	"	"	"	"	"				
		"	108	"	A	"	"	"	"	A	"	"	"	"	"	"	"	"	"				
		"	109	"	B	"	B	B	B	"	"	"	"	"	"	"	"	"	"				
		"	110	"	A	"	"	"	"	"	"	"	"	"	"	"	"	"	"				
		"	111	"	B	"	"	"	"	"	"	B	"	"	"	"	"	"	"				
		"	112	"	A	"	"	"	"	"	"	"	"	"	"	"	H	"	"				
		"	113	"	A	"	A	A	"	"	"	"	"	"	"	"	"	"	"				
		"	114	"	B	"	A	A	"	"	"	"	"	"	"	"	"	"	"				

See footnotes at end of device types 03, 04, 11, and 12.

TABLE III. Group A inspection for device type 04 – Continued.
Terminal conditions (pins not designated may be H ≥ 2.0 V or L ≤ 0.7 V or open).

Subgroup	Symbol	MIL-STD-883 method	Cases E, F	1	2	3	4	5	6	7	8	9	10	11	12	13	14	15	16	Measured terminal	Limits		Unit
			Cases 1/ 2	2	3	4	5	7	8	9	10	12	13	14	15	17	18	19	20				
			Test no.	Clear	Clock	A	B	C	D	EnP	GND	Load	EnT	Q_D	Q_C	Q_B	Q_A	Ripple carry	V_{CC}		Min	Max	
7	Func-	3014	115	A 8/	A 8/	A	A	A	B	A	GND	B	B	L	H	H	H	L	4.5 V	See 9/			
Tc = +25°C	tional	"	116	"	A	"	"	"	"	"	"	A	"	"	"	"	"	"	"				
	tests	"	117	"	B	"	"	"	"	"	"	"	"	"	"	"	"	"	"				
	7/	"	118	"	A	"	"	"	"	"	"	"	"	"	"	"	"	"	"				
		"	119	"	B	"	B	B	A	"	"	B	"	"	"	"	"	"	"				
		"	120	"	A	"	B	B	"	"	"	"	"	H	L	L	"	"	"				
		"	121	B	A	"	A	A	"	"	"	"	A	L	"	"	L	"	"				
		"	122	A	A	"	"	"	"	"	"	"	"	"	"	"	"	"	"				
		"	123	"	B	"	"	"	"	"	"	"	"	"	"	"	"	"	"				
		"	124	"	A	"	"	"	"	"	"	"	"	H	H	H	H	H	"				
		"	125	"	B	"	"	"	"	"	"	"	"	"	"	"	"	"	"				
		"	126	B	A	"	"	"	"	"	"	A	"	L	L	L	L	L	"				
		"	127	A	A	B	"	"	"	"	"	B	"	"	"	"	"	"	"				
		"	128	"	B	"	"	"	"	"	"	"	"	"	"	"	"	"	"				
		"	129	"	A	"	"	"	"	"	"	"	"	H	H	H	"	"	"				
		"	130	"	A	"	"	B	B	"	"	"	"	"	"	"	"	"	"				
		"	131	"	B	"	"	"	"	"	"	"	"	"	"	"	"	"	"				
		"	132	"	A	"	"	"	"	"	"	"	"	L	L	"	"	"	"				
		"	133	"	A	A	"	"	"	"	"	"	"	"	"	"	"	"	"				
		"	134	"	B	"	"	"	"	"	"	"	"	"	"	"	"	"	"				
		"	135	"	A	"	"	"	"	"	"	"	"	"	"	"	H	"	"				
		"	136	"	A	B	B	A	"	"	"	"	"	"	"	"	"	"	"				
		"	137	"	B	"	"	"	"	"	"	"	"	"	"	"	"	"	"				
		"	138	"	A	"	"	"	"	"	"	"	"	"	H	L	L	"	"				
		"	139	"	A	A	"	"	"	"	"	"	"	"	"	"	"	"	"				
		"	140	"	B	"	"	"	"	"	"	"	"	"	"	"	"	"	"				
		"	141	"	A	"	"	"	"	"	"	"	"	"	"	"	H	"	"				
		"	142	"	A	B	A	"	"	"	"	"	"	"	"	"	"	"	"				
		"	143	"	B	"	"	"	"	"	"	"	"	"	"	"	"	"	"				
		"	144	"	A	"	"	"	"	"	"	"	"	"	"	H	L	"	"				
		"	145	"	A	"	B	B	A	"	"	"	"	"	"	"	"	"	"				
		"	146	"	B	"	"	"	"	"	"	"	"	"	"	"	"	"	"				
		"	147	"	A	"	"	"	"	"	"	"	"	H	L	L	"	"	"				
		"	148	"	A	A	A	"	"	"	"	"	"	"	"	"	"	"	"				
		"	149	"	B	"	"	"	"	"	"	"	"	"	"	"	"	"	"				
		"	150	"	A	"	"	"	"	"	"	"	"	"	"	H	H	"	"				
		"	151	"	A	B	B	A	"	"	"	"	"	"	"	"	"	"	"				
		"	152	"	B	"	"	"	"	"	"	"	"	"	"	"	"	"	"				
		"	153	"	A	"	"	"	"	"	"	"	"	"	H	L	L	"	"				
		"	154	"	A	A	"	"	"	"	"	"	"	"	"	"	"	"	"				
		"	155	"	B	"	"	"	"	"	"	"	"	"	"	"	"	"	"				
		"	156	"	A	"	"	"	"	"	"	"	"	"	"	"	H	"	"				
8	Repeat subgroup 7 at T_C = +125 and T_C = -55°C.																						

See footnotes at end of device types 03, 04, 11, and 12.

TABLE III. Group A inspection for device type 11 – Continued.
Terminal conditions (pins not designated may be H ≥ 2.0 V or L ≤ 0.7 V or open).

Subgroup	Symbol	MIL-STD-883 method	Cases E, F Cases 1/ 2 Test no.	1 2 Clear	2 3 Clock	3 4 A	4 5 B	5 7 C	6 8 D	7 9 EnP	8 10 GND	9 12 Load	10 13 EnT	11 14 Q_D	12 15 Q_C	13 17 Q_B	14 18 Q_A	15 19 Ripple carry	16 20 V_{CC}	Measured terminal	Limits Min	Limits Max	Unit
7	Func-	3014	56	B 8/	B 8/	B 8/	B	B	B 8/	A 8/	GND	B	A	X	X	X	X	X	4.5 V	See 9/			
Tc = +25°C	tional	"	57	B	A	"	"	"	"	"	"	"	"	L	L	L	L	L	"				
	tests	"	58	A	B	"	"	"	"	"	"	"	"	"	"	"	"	"	"				
	7/	"	59	A	A	"	"	"	"	"	"	"	"	"	"	"	"	"	"				
		"	60	B	A	A	A	A	A	"	"	A	"	"	"	"	"	"	"				
		"	61	B	B	A	A	A	A	"	"	"	"	"	"	"	"	"	"				
		"	62	B	A	A	A	A	A	"	"	"	"	"	"	"	"	"	"				
		"	63	A	A	B	B	B	B	"	"	"	B	"	"	"	"	"	"				
		"	64	"	B	A	A	A	A	"	"	"	A	"	"	"	"	"	"				
		"	65	"	A	A	A	A	A	"	"	"	A	"	"	"	H	"	"				
		"	66	"	A	B	B	B	B	"	"	"	B	"	"	"	"	"	"				
		"	67	"	B	A	A	A	A	"	"	"	A	"	"	"	"	"	"				
		"	68	"	A	A	A	A	A	"	"	"	A	"	"	H	L	"	"				
		"	69	"	A	B	B	B	B	"	"	"	B	"	"	"	"	"	"				
		"	70	"	B	A	A	A	A	"	"	"	A	"	"	"	"	"	"				
		"	71	"	A	A	A	A	A	"	"	"	A	"	"	"	H	"	"				
		"	72	"	A	B	B	B	B	"	"	"	B	"	"	"	"	"	"				
		"	73	"	B	A	A	A	A	"	"	"	A	"	"	"	"	"	"				
		"	74	"	A	A	A	A	A	"	"	"	A	"	H	L	L	"	"				
		"	75	"	A	B	B	B	B	"	"	"	B	"	"	"	"	"	"				
		"	76	"	B	A	A	A	A	"	"	"	A	"	"	"	"	"	"				
		"	77	"	A	A	A	A	A	"	"	"	A	"	"	"	H	"	"				
		"	78	"	A	B	B	B	B	"	"	"	B	"	"	"	"	"	"				
		"	79	"	B	A	A	A	A	"	"	"	A	"	"	"	"	"	"				
		"	80	"	A	A	A	A	A	"	"	"	A	"	"	H	L	"	"				
		"	81	"	A	B	B	B	B	"	"	"	B	"	"	"	"	"	"				
		"	82	"	B	A	A	A	A	"	"	"	A	"	"	"	"	"	"				
		"	83	"	A	A	A	A	A	"	"	"	A	"	"	"	H	"	"				
		"	84	"	A	B	B	B	B	"	"	"	B	"	"	"	"	"	"				
		"	85	"	B	A	A	A	A	"	"	"	A	"	"	"	"	"	"				
		"	86	"	A	A	A	A	A	"	"	"	A	H	L	L	L	"	"				
		"	87	"	A	B	B	B	B	"	"	"	B	"	"	"	"	"	"				
		"	88	"	B	B	B	B	B	"	"	"	B	"	"	"	"	"	"				
		"	89	"	B	A	A	A	A	"	"	"	A	"	"	"	"	"	"				
		"	90	"	A	A	A	A	A	"	"	"	A	"	"	"	H	H	"				
		"	91	"	A	B	B	B	B	"	"	"	B	"	"	"	"	L	"				
		"	92	"	B	A	A	A	A	"	"	"	A	"	"	"	"	H	"				
		"	93	"	A	"	"	"	"	"	"	"	A	L	"	"	L	L	"				
		"	94	"	A	"	"	"	"	B	"	"	"	"	"	"	"	"	"				
		"	95	"	B	"	"	"	"	"	"	"	"	"	"	"	"	"	"				
		"	96	"	A	"	"	"	"	"	"	"	"	"	"	"	"	"	"				
		"	97	"	B	"	"	"	"	A	"	"	B	"	"	"	"	"	"				
		"	98	"	A	"	B	B	B	"	"	"	"	"	"	"	"	"	"				
		"	99	"	B	"	"	"	"	"	"	B	"	"	"	"	"	"	"				
		"	100	"	A	"	"	"	"	"	"	"	"	"	"	"	H	"	"				
		"	101	"	A	"	A	A	"	"	"	"	"	"	"	"	"	"	"				
		"	102	"	B	"	"	"	"	"	"	"	"	"	"	"	"	"	"				
		"	103	"	A	"	"	"	"	"	"	"	"	"	H	H	"	"	"				
		"	104	"	A	"	"	"	"	"	"	A	"	"	"	"	"	"	"				
		"	105	"	B	"	"	"	"	"	"	"	"	"	"	"	"	"	"				
		"	106	A	A	"	"	"	"	A	"	"	"	"	"	"	"	"	"				
		"	107	"	B	"	B	B	A	"	"	B	"	"	"	"	"	"	"				
		"	108	"	A	"	"	"	"	"	"	B	"	H	L	L	"	"	"				
		"	109	"	A	"	"	"	"	"	"	A	"	"	"	"	"	"	"				
		"	110	"	B	"	"	"	"	"	"	"	"	"	"	"	"	"	"				
		"	111	"	A	"	"	"	"	"	"	"	"	"	"	"	"	"	"				
		"	112	B	B	"	A	A	"	"	"	"	A	"	"	"	"	H	"				
		"	113	B	A	"	"	"	"	"	"	"	"	L	"	"	L	L	"				
		"	114	A	A	"	"	"	"	"	"	B	"	L	"	"	L	L	"				

See footnotes at end of device types 03, 04, 11, and 12.

TABLE III. Group A inspection for device type 11 – Continued.
Terminal conditions (pins not designated may be H ≥ 2.0 V or L ≤ 0.7 V or open).

Subgroup	Symbol	MIL-STD-883 method	Cases E, F	1	2	3	4	5	6	7	8	9	10	11	12	13	14	15	16	Measured terminal	Limits		Unit
			Cases 1/ 2	2	3	4	5	7	8	9	10	12	13	14	15	17	18	19	20				
			Test no.	Clear	Clock	A	B	C	D	EnP	GND	Load	EnT	Q_D	Q_C	Q_B	Q_A	Ripple carry	V_{CC}		Min	Max	
7 Tc = +25°C	Func- tional tests 7/	3014	115	A 8/	B 8/	A	B	B	A	A	GND	B	A	L	L	L	L	L	4.5 V	See 9/			
		"	116	"	A	"	"	"	"	"	"	"	"	H	"	"	H	H	"				
		"	117	"	B	"	"	"	"	"	"	"	"	"	"	"	"	"	"				
		"	118	"	A	"	"	"	"	"	"	"	"	"	"	"	"	"	"				
		"	119	B	B	"	"	"	"	"	"	"	"	"	"	"	"	"	"				
		"	120	B	A	"	"	"	"	"	"	"	"	L	"	"	L	L	"				
		"	121	A	A	B	"	"	B	"	"	"	B	"	"	"	"	"	"				
		"	122	"	B	"	A	"	"	"	"	"	"	"	"	"	"	"	"				
		"	123	"	A	"	A	"	"	"	"	"	"	"	"	H	"	"	"				
		"	124	"	A	"	B	"	A	"	"	"	"	"	"	"	"	"	"				
		"	125	"	B	"	"	"	"	"	"	"	"	"	"	"	"	"	"				
		"	126	"	A	"	"	"	"	"	"	"	"	H	"	L	"	"	"				
		"	127	"	A	"	"	"	B	"	"	"	A	"	"	"	"	"	"				
		"	128	"	B	"	"	"	"	"	"	"	"	"	"	"	"	"	"				
		"	129	"	A	"	"	"	"	"	"	"	"	L	"	"	"	"	"				
		"	130	"	A	"	A	A	A	"	"	"	"	"	"	"	"	"	"				
		"	131	"	B	"	"	"	"	"	"	"	"	"	"	"	"	"	"				
		"	132	"	A	"	"	"	"	"	"	"	"	H	H	H	"	"	"				
		"	133	"	A	A	"	B	B	"	"	"	"	"	"	"	"	"	"				
		"	134	"	B	"	"	"	"	"	"	"	"	"	"	"	"	"	"				
		"	135	"	A	"	"	"	"	"	"	"	"	L	L	"	H	"	"				
		"	136	"	A	B	B	A	"	"	"	"	"	"	"	"	"	"	"				
		"	137	"	B	"	"	"	"	"	"	"	"	"	"	"	"	"	"				
		"	138	"	A	"	"	"	"	"	"	"	"	"	H	L	L	"	"				
		"	139	"	A	A	"	"	"	"	"	"	"	"	"	"	"	"	"				
		"	140	"	B	"	"	"	"	"	"	"	"	"	"	"	"	"	"				
		"	141	"	A	"	"	"	"	"	"	"	"	"	"	"	H	"	"				
		"	142	"	A	B	A	"	"	"	"	"	"	"	"	"	"	"	"				
		"	143	"	B	"	"	"	"	"	"	"	"	"	"	"	"	"	"				
		"	144	"	A	"	"	"	"	"	"	"	"	"	"	H	L	"	"				
		"	145	"	A	"	B	B	A	"	"	"	"	"	"	"	"	"	"				
		"	146	"	B	"	"	"	"	"	"	"	"	"	"	"	"	"	"				
		"	147	"	A	"	"	"	"	"	"	"	"	H	L	L	"	"	"				
		"	148	"	A	A	"	"	"	"	"	"	"	"	"	"	"	"	"				
		"	149	"	B	"	"	"	"	"	"	"	"	"	"	"	"	"	"				
		"	150	"	A	"	"	"	"	"	"	"	"	"	"	"	H	H	"				
		"	151	"	A	"	A	A	"	"	"	A	"	"	"	"	"	"	"				
		"	152	"	B	"	"	"	"	"	"	"	"	"	"	"	"	"	"				
		"	153	"	A	"	"	"	"	"	"	"	"	L	"	"	L	L	"				
8	Repeat subgroup 7 at T_C = +125 and T_C = -55°C.																						

See footnotes at end of device types 03, 04, 11, and 12.

TABLE III. Group A inspection for device type 12 – Continued.
Terminal conditions (pins not designated may be H ≥ 2.0 V or L ≤ 0.7 V or open).

Subgroup	Symbol	MIL-STD-883 method	Cases E, F	1	2	3	4	5	6	7	8	9	10	11	12	13	14	15	16	Measured terminal	Limits		Unit
			Cases 1/ 2	2	3	4	5	7	8	9	10	12	13	14	15	17	18	19	20				
			Test no.	Clear	Clock	A	B	C	D	EnP	GND	Load	EnT	Q_D	Q_C	Q_B	Q_A	Ripple carry	V_{CC}		Min	Max	
7	Func-	3014	56	B 8/	B 8/	B 8/	B	B	B	A 8/	GND	B	A	X	X	X	X	X	4.5 V	See 9/			
Tc = +25°C	tional	"	57	B	A	"	"	"	"	"	"	"	"	L	L	L	L	L	"				
	tests	"	58	A	B	"	"	"	"	"	"	"	"	"	"	"	"	"	"				
	7/	"	59	A	A	"	"	"	"	"	"	"	"	"	"	"	"	"	"				
		"	60	B	A	A	A	A	A	"	"	A	"	"	"	"	"	"	"				
		"	61	B	B	"	"	"	"	"	"	"	"	"	"	"	"	"	"				
		"	62	B	A	"	"	"	"	"	"	"	"	"	"	"	"	"	"				
		"	63	A	A	B	B	B	B	"	"	"	B	"	"	"	"	"	"				
		"	64	"	B	A	A	A	A	"	"	"	A	"	"	"	"	"	"				
		"	65	"	A	A	A	A	A	"	"	"	A	"	"	"	H	"	"				
		"	66	"	A	B	B	B	B	"	"	"	B	"	"	"	"	"	"				
		"	67	"	B	A	A	A	A	"	"	"	A	"	"	"	"	"	"				
		"	68	"	A	A	A	A	A	"	"	"	A	"	"	H	L	"	"				
		"	69	"	A	B	B	B	B	"	"	"	B	"	"	"	"	"	"				
		"	70	"	B	A	A	A	A	"	"	"	A	"	"	"	"	"	"				
		"	71	"	A	A	A	A	A	"	"	"	A	"	"	"	H	"	"				
		"	72	"	A	B	B	B	B	"	"	"	B	"	"	"	"	"	"				
		"	73	"	B	A	A	A	A	"	"	"	A	"	"	"	"	"	"				
		"	74	"	A	A	A	A	A	"	"	"	A	"	H	L	L	"	"				
		"	75	"	A	B	B	B	B	"	"	"	B	"	"	"	"	"	"				
		"	76	"	B	A	A	A	A	"	"	"	A	"	"	"	"	"	"				
		"	77	"	A	A	A	A	A	"	"	"	A	"	"	"	H	"	"				
		"	78	"	A	B	B	B	B	"	"	"	B	"	"	"	"	"	"				
		"	79	"	B	A	A	A	A	"	"	"	A	"	"	"	"	"	"				
		"	80	"	A	A	A	A	A	"	"	"	A	"	"	H	L	"	"				
		"	81	"	A	B	B	B	B	"	"	"	B	"	"	"	"	"	"				
		"	82	"	B	A	A	A	A	"	"	"	A	"	"	"	"	"	"				
		"	83	"	A	A	A	A	A	"	"	"	A	"	"	"	H	"	"				
		"	84	"	A	B	B	B	B	"	"	"	B	"	"	"	"	"	"				
		"	85	"	B	A	A	A	A	"	"	"	A	"	"	"	"	"	"				
		"	86	"	A	A	A	A	A	"	"	"	A	H	L	L	L	"	"				
		"	87	"	A	B	B	B	B	"	"	"	B	"	"	"	"	"	"				
		"	88	"	B	A	A	A	A	"	"	"	A	"	"	"	"	"	"				
		"	89	"	A	A	A	A	A	"	"	"	A	"	"	"	H	"	"				
		"	90	"	A	B	B	B	B	"	"	"	B	"	"	"	"	"	"				
		"	91	"	B	A	A	A	A	"	"	"	A	"	"	"	"	"	"				
		"	92	"	A	A	A	A	A	"	"	"	A	"	"	H	L	"	"				
		"	93	"	A	B	B	B	B	"	"	"	B	"	"	"	"	"	"				
		"	94	"	B	A	A	A	A	"	"	"	A	"	"	"	"	"	"				
		"	95	"	A	A	A	A	A	"	"	"	A	"	"	"	H	"	"				
		"	96	"	A	B	B	B	B	"	"	"	B	"	"	"	"	"	"				
		"	97	"	B	A	A	A	A	"	"	"	A	"	"	"	"	"	"				
		"	98	"	A	A	A	A	A	"	"	"	A	"	H	L	L	"	"				
		"	99	"	A	B	B	B	B	"	"	"	B	"	"	"	"	"	"				
		"	100	"	B	A	A	A	A	"	"	"	A	"	"	"	"	"	"				
		"	101	"	A	A	A	A	A	"	"	"	A	"	"	"	H	"	"				
		"	102	"	A	B	B	B	B	"	"	"	B	"	"	"	"	"	"				
		"	103	"	B	A	A	A	A	"	"	"	A	"	"	"	"	"	"				
		"	104	"	A	A	A	A	A	"	"	"	A	"	"	H	L	"	"				
		"	105	"	A	B	B	B	B	"	"	"	B	"	"	"	"	"	"				
		"	106	"	B	A	A	A	A	"	"	"	A	"	"	"	"	"	"				
		"	107	"	A	A	A	A	A	"	"	"	A	"	"	"	H	H	"				
		"	108	"	A	B	B	B	B	"	"	"	B	"	"	"	"	L	"				
		"	109	"	B	A	A	A	A	"	"	"	A	"	"	"	"	H	"				
		"	110	"	A	"	"	"	"	"	"	"	A	L	L	L	L	L	"				
		"	111	"	B	"	"	"	"	B	"	"	B	"	"	"	"	"	"				
		"	112	"	A	"	"	"	"	"	"	"	"	"	"	"	"	"	"				
		"	113	"	B	"	"	"	"	A	"	"	"	"	"	"	"	"	"				
		"	114	"	A	"	B	B	B	A	"	"	"	"	"	"	"	"	"				

See footnotes at end of device types 03, 04, 11, and 12.

TABLE III. Group A inspection for device type 12 – Continued.
Terminal conditions (pins not designated may be H ≥ 2.0 V or L ≤ 0.7 V or open).

Subgroup	Symbol	MIL-STD-883 method	Cases E, F	1	2	3	4	5	6	7	8	9	10	11	12	13	14	15	16	Measured terminal	Limits		Unit
			Cases 1/ 2	2	3	4	5	7	8	9	10	12	13	14	15	17	18	19	20				
			Test no.	Clear	Clock	A	B	C	D	EnP	GND	Load	EnT	Q_D	Q_C	Q_B	Q_A	Ripple carry	V_{CC}		Min	Max	
7	Func-	3014	115	A 8/	B	A	B 8/	B 8/	B	A	GND	B	B	L	L	L	L	L	4.5 V	See 9/			
Tc = +25°C	tional	"	116	"	A	"	B	B	"	"	"	"	"	"	"	"	H	"	"				
	tests	"	117	"	A	"	A	A	"	"	"	"	"	"	"	"	"	"	"				
	7/	"	118	"	B	"	"	"	"	"	"	"	"	"	"	"	"	"	"				
		"	119	"	A	"	"	"	"	"	"	"	"	"	H	H	"	"	"				
		"	120	"	A	"	"	"	"	"	"	A	"	"	"	"	"	"	"				
		"	121	"	B	"	"	"	"	"	"	"	"	"	"	"	"	"	"				
		"	122	"	A	"	B	B	A	"	"	"	"	"	"	"	"	"	"				
		"	123	"	B	"	"	"	"	"	"	B	"	"	"	"	"	"	"				
		"	124	"	A	"	"	"	"	"	"	"	"	H	L	L	"	"	"				
		"	125	"	A	"	A	A	"	"	"	"	A	"	"	"	"	"	"				
		"	126	"	B	"	"	"	"	"	"	"	"	"	"	"	"	"	"				
		"	127	"	A	"	"	"	"	"	"	"	"	"	"	H	H	"	H				
		"	128	"	A	B	"	"	"	"	"	"	"	"	"	"	"	"	"				
		"	129	"	B	A	"	"	"	"	"	"	"	"	"	"	"	"	"				
		"	130	"	B	A	B	B	B	"	"	"	"	"	"	"	"	"	"				
		"	131	"	A	A	"	"	"	"	"	"	"	L	L	L	"	L	"				
		"	132	"	"	B	"	"	"	"	"	"	"	"	"	"	"	"	"				
		"	133	"	"	A	"	A	A	"	"	"	"	"	"	"	"	"	"				
		"	134	"	"	B	"	"	A	"	"	"	"	"	"	"	"	"	"				
		"	135	"	"	A	"	"	B	"	"	"	"	"	"	"	"	"	"				
		"	136	"	"	B	"	"	"	"	"	"	"	"	"	"	"	"	"				
		"	137	"	"	B	A	B	"	"	"	"	"	"	"	"	"	"	"				
		"	138	"	"	A	"	"	"	"	"	"	"	"	"	"	"	"	"				
		"	139	"	B	"	"	"	"	"	"	"	"	"	"	"	"	"	"				
		"	140	"	A	"	"	"	"	"	"	"	"	"	"	H	"	"	"				
		"	141	"	A	B	B	A	"	"	"	"	"	"	"	"	"	"	"				
		"	142	"	B	"	"	"	"	"	"	"	"	"	"	"	"	"	"				
		"	143	"	A	"	"	"	"	"	"	"	"	"	H	L	L	"	"				
		"	144	"	A	A	"	"	"	"	"	"	"	"	"	"	"	"	"				
		"	145	"	B	"	"	"	"	"	"	"	"	"	"	"	"	"	"				
		"	146	"	A	"	"	"	"	"	"	"	"	"	"	"	H	"	"				
		"	147	"	A	B	A	"	"	"	"	"	"	"	"	"	"	"	"				
		"	148	"	B	"	"	"	"	"	"	"	"	"	"	"	"	"	"				
		"	149	"	A	"	"	"	"	"	"	"	"	"	"	H	L	"	"				
		"	150	"	A	"	B	B	A	"	"	"	"	"	"	"	"	"	"				
		"	151	"	B	"	"	"	"	"	"	"	"	"	"	"	"	"	"				
		"	152	"	A	"	"	"	"	"	"	"	"	H	L	L	"	"	"				
		"	153	"	A	"	A	"	"	"	"	"	"	"	"	"	"	"	"				
		"	154	"	B	"	"	"	"	"	"	"	"	"	"	"	"	"	"				
		"	155	"	A	"	"	"	"	"	"	"	"	"	"	H	"	"	"				
		"	156	"	A	A	"	"	"	"	"	"	"	"	"	"	"	"	"				
		"	157	"	B	"	"	"	"	"	"	"	"	"	"	"	"	"	"				
		"	158	"	A	"	"	"	"	"	"	"	"	"	"	"	H	"	"				
		"	159	"	A	B	B	A	"	"	"	"	"	"	"	"	"	"	"				
		"	160	"	B	"	"	"	"	"	"	"	"	"	"	"	"	"	"				
		"	161	"	A	"	"	"	"	"	"	"	"	"	H	L	L	"	"				
		"	162	"	A	A	"	"	"	"	"	"	"	"	"	"	"	"	"				
		"	163	"	B	"	"	"	"	"	"	"	"	"	"	"	"	"	"				
		"	164	"	A	"	"	"	"	"	"	"	"	"	"	"	H	"	"				
		"	165	"	A	"	"	"	"	"	"	A	"	"	"	"	"	"	"				
		"	166	"	B	"	"	"	"	"	"	"	"	"	"	"	"	"	"				
		"	167	"	A	"	"	"	"	"	"	"	"	"	"	H	L	"	"				
8	Repeat subgroup 7 at T_C = +125 and T_C = -55°C.																						

See footnotes at end of device types 03, 04, 11, and 12.

TABLE III. Group A inspection for device types 03, 04, 11, and 12.

Terminal conditions (pins not designated may be H ≥ 2.0 V; or L ≤ 0.7 V; or open).

Subgroup	Symbol	MIL-STD-883 method	Cases E, F				1	2	3	4	5	6	7	8	9	10	11	12	13	14	15	16	Measured terminal	Limits		Unit
			Case 1/				2	3	4	5	7	8	9	10	12	13	14	15	17	18	19	20		Min	Max	
			Test no. (Device types)				Clear	Clock	A	B	C	D	EnP	GND	Load	EnT	Q_D	Q_C	Q_B	Q_A	Ripple carry	V_{CC}				
9 Tc = +125°C	F_{MAX} 10/	3003 (Fig 6)	151	157	154	168	4.5 V	IN					4.5 V	GND	4.5 V	4.5 V				OUT		5.0 V	Q_A	22		MHz
	t_{PLH4}	"	152	158	155	169	"	"					"	"	"	"					OUT	"	Clk to carry	3	40	ns
	t_{PHL4}	"	153	159	156	170	"	"					"	"	"	"					OUT	"	Clk to carry	"	40	"
	t_{PLH5}	"	154	160	157	171	"	"					"	"	"	"				OUT		"	Clk to Q_A	"	29	"
		"	155	161	158	172	"	"					"	"	"	"			OUT			"	Clk to Q_B	"	"	"
		"	156	162	159	173	"	"					"	"	"	"		OUT				"	Clk to Q_C	"	"	"
		"	157	163	160	174	"	"					"	"	"	"	OUT					"	Clk to Q_D	"	"	"
	t_{PHL5}	"	158	164	161	175	"	"					"	"	"	"				OUT		"	Clk to Q_A	"	32	"
		"	159	165	162	176	"	"					"	"	"	"			OUT			"	Clk to Q_B	"	"	"
		"	160	166	163	177	"	"					"	"	"	"		OUT				"	Clk to Q_C	"	"	"
		"	161	167	164	178	"	"					"	"	"	"	OUT					"	Clk to Q_D	"	"	"
	t_{PLH6}	"	162	168	165	179	"	"	IN					"	GND					OUT		"	Clk to Q_A	"	29	"
	t_{PHL6}	"	163	169	166	180	"	"	IN					"	"					OUT		"	Clk to Q_A	"	32	"
	t_{PLH6}	"	164	170	167	181	"	"		IN				"	"				OUT			"	Clk to Q_B	"	29	"
	t_{PHL6}	"	165	171	168	182	"	"		IN				"	"				OUT			"	Clk to Q_B	"	32	"
	t_{PLH6}	"	166	172	169	183	"	"			IN			"	"			OUT				"	Clk to Q_C	"	29	"
	t_{PHL6}	"	167	173	170	184	"	"			IN			"	"			OUT				"	Clk to Q_C	"	32	"
	t_{PLH6}	"	168	174	171	185	"	"				IN		"	"		OUT					"	Clk to Q_D	"	29	"
	t_{PHL6}	"	169	175	172	186	"	"				IN		"	"		OUT					"	Clk to Q_D	"	32	"
	t_{PLH7}	"	170	176	173	187	"	"					4.5 V	"	4.5 V	IN					OUT	"	EnT to C_y	"	19	"
	t_{PHL7}	"	171	177	174	188	"	"					4.5 V	"	4.5 V	IN					OUT		EnT to C_y	"	19 11/	"
	t_{PHL8}	"	172	178	175	189	IN	12/	4.5 V					"	GND					OUT			Clr to Q_A	"	33	"
	t_{PHL8}	"	173	179	176	190	"	"		4.5 V				"	"				OUT				Clr to Q_B	"	"	"
	t_{PHL8}	"	174	180	177	191	"	"			4.5 V			"	"			OUT					Clr to Q_C	"	"	"
	t_{PHL8}	"	175	181	178	192	"	"				4.5 V		"	"		OUT						Clr to Q_D	"	"	"

See footnotes at end of device types 03, 04, 11, and 12.

TABLE III. Group A inspection for device types 03, 04, 11, and 12.
Terminal conditions (pins not designated may be H ≥ 2.0 V; or L ≤ 0.7 V; or open).

Subgroup	Symbol	MIL-STD-883 method	Cases E, F				1	2	3	4	5	6	7	8	9	10	11	12	13	14	15	16	Measured terminal	Limits		Unit
			Case 1/				2	3	4	5	7	8	9	10	12	13	14	15	17	18	19	20		Min	Max	
			Test no. (Device types)				Clear	Clock	A	B	C	D	EnP	GND	Load	EnT	Q_D	Q_C	Q_B	Q_A	Ripple carry	V_{CC}				
			03	04	11	12																				
10 Tc = +125°C	F_{MAX} 10/	3003 (Fig 6)	176	182	179	193																	Clk to Q_A	22		MHz
	t_{PLH4}	"	177	183	180	194																	Clk to Carry	3	56	ns
	t_{PHL4}	"	178	184	181	195																	Clk to carry	"	56	"
	t_{PLH5}	"	179	185	182	196																	Clk to Q_A	"	41	"
		"	180	186	183	197																	Clk to Q_B	"	"	"
		"	181	187	184	198																	Clk to Q_C	"	"	"
		"	182	188	185	199																	Clk to Q_D	"	"	"
	t_{PHL5}	"	183	189	186	200																	Clk to Q_A	"	45	"
		"	184	190	187	201																	Clk to Q_B	"	"	"
		"	185	191	188	202																	Clk to Q_C	"	"	"
		"	186	192	189	203																	Clk to Q_D	"	"	"
	t_{PLH6}	"	187	193	190	204																	Clk to Q_A	"	42	"
	t_{PHL6}	"	188	194	191	205	Same terminal conditions as for subgroup 9.																Clk to Q_A	"	48	"
	t_{PLH6}	"	189	195	192	206																	Clk to Q_B	"	42	"
	t_{PHL6}	"	190	196	193	207																	Clk to Q_B	"	48	"
	t_{PLH6}	"	191	197	194	208																	Clk to Q_C	"	42	"
	t_{PHL6}	"	192	198	195	209																	Clk to Q_C	"	48	"
	t_{PLH6}	"	193	199	196	210																	Clk to Q_D	"	42	"
	t_{PHL6}	"	194	200	197	211																	Clk to Q_D	"	48	"
	t_{PLH7}	"	195	201	198	212																	EnT to carry	"	28	"
	t_{PHL7}	"	196	202	199	213																	EnT to carry	"	28	"
	t_{PHL8}	"	197	203	200	214																	Clr to Q_A	"	46	"
	t_{PHL8}	"	198	204	201	215																	Clr to Q_B	"	46	"
	t_{PHL8}	"	199	205	202	216																	Clr to Q_C	"	46	"
	t_{PHL8}	"	200	206	203	217																	Clr to Q_D	"	46	"
11	Same tests, terminal conditions, and limits as for subgroup 10, except T_C = -55°C.																									

See footnotes at end of device types 03, 04, 11, and 12.

1/ For case 2, pins not referenced are NC.

2/ Apply one pulse prior to measurement as follows:



3/ Apply 0.7 V for types 03 and 11; apply 2.0 V for types 04 and 12.

4/ I_{IL} limits (µA) min/max values for circuits shown:

Parameter	Terminals	Circuits						
		A	B	C	D	E	F	G
	Clear 03	-160/-400	-30/-300	-120/-360	-160/-400	-120/-360	-0/-100	-16/-400
	Clear 04	"	"	"	"	"	"	"
	Clear 11	"	"		"	"	-150/-450	"
	Clear 12	"	"	-290/-630	"			"
	EnP	"	"	-120/-360	"	-120/-360	-150/-380	"
	A, B, C, D	"	"	-160/-400	"	-150/-380	-0/-100	"
I_{IL5}	Load	-320/-800	-30/-300	-290/-630	-320/-800	-120/-360	-160/-400	-320/-800
	EnT			-340/-860		-240/-720	-300/-760	
I_{IL6}	Clock	-160/-400	-0/-100	-290/-630	-160/-400	-180/-420	-0/-100	-160/-400

5/ For types 03 and 11, set outputs to 9th count (Q_A = 1, Q_D = 1, Q_B and Q_C = 0) prior to measurement.

For types 04 and 12, set outputs to 15th count (Q_A, Q_B, Q_C and Q_D = 1) prior to measurement.

6/ Apply GND for types 03 and 11; apply 4.5 V for types 04 and 12.

7/ Only a summary of attributes data is required.

8/ A = 3.0 V minimum; B = 0.0 V or GND.

9/ H > 1.5 V; L < 1.5 V; X = don't care.

10/ The F_{MAX} minimum limit specified is the frequency of the input pulse. The output frequency shall be one-half of the input frequency. For type 04, circuit C, 20 MHz minimum.

11/ The limit for circuit B shall be 23 ns.

12/ For types 03 and 04, apply one clock pulse prior to test. For types 11 and 12 apply one clock pulse prior to test and another pulse during test.

13/ I_{IH13} limit for types 11 and 12; 40 µA maximum.

I_{IH14} limit for types 11 and 12; 200 µA maximum.

TABLE III. Group A inspection for device types 05 and 06.

Terminal conditions (pins not designated may be H ≥ 2.0 V; or L ≤ 0.7 V; or open).

Subgroup	Symbol	MIL-STD-883 method	Cases E, F	1	2	3	4	5	6	7	8	9	10	11	12	13	14	15	16	Measured terminal	Limits		Unit
			Case 1/ 2	2	3	4	5	7	8	9	10	12	13	14	15	17	18	19	20		Min	Max	
			Test no.	U/ $\overline{D}$	CK	A	B	C	D	EP	GND	L	ET	$Q_{D'}$	$Q_{C'}$	$Q_{B'}$	$Q_{A'}$	Ripple carry	V_{CC}				
1 Tc = +25°C	V_{OL}	3007	1	4.5 V	2/	0.7 V	0.7 V	0.7 V	0.7 V	4.5 V	GND	0.7 V	4.5 V	4 mA					4.5 V	Q_D		0.4	V
		"	2		"	"	"	"	"	"	"	"	"		4 mA				"	Q_C		"	"
		"	3		"	"	"	"	"	"	"	"	"			4 mA			"	Q_B		"	"
		"	4		"	"	"	"	"	"	"	"	"				4 mA		"	Q_A		"	"
		"	5	0.7 V	"	"	"	"	"	0.7 V	"	"	0.7 V					4 mA	"	Ripple carry		"	"
	V_{OH}	3006	6	4.05 V	"	2.0 V	2.0 V	2.0 V	2.0 V	"	"	"	"	-.4 mA					"	Q_D	2.5		"
		"	7		"	"	"	"	"	"	"	"	"		-.4 mA				"	Q_C	"		"
		"	8		"	"	"	"	"	"	"	"	"			-.4 mA			"	Q_B	"		"
		"	9		"	"	"	"	"	"	"	"	"				-.4 mA		"	Q_A	"		"
		"	10	0.7 V	"	"	"	"	"	"	"	"	"					-.4 mA	"	Ripple carry	"		"
	V_{IC}		11	-18 mA							"								"	U/ $\overline{D}$		-1.5	"
			12		-18 mA						"								"	CK		"	"
			13			-18 mA					"								"	A		"	"
			14				-18 mA				"								"	B		"	"
			15					-18 mA			"								"	C		"	"
			16						-18 mA		"								"	D		"	"
			17							-18 mA	"								"	EP		"	"
			18								"	-18 mA							"	L		"	"
			19								"		-18 mA						"	ET		"	"
	I_{IL12}	3009	20			0.4 V					"	GND							5.5 V	A	3/	3/	µA
		"	21				0.4 V				"	"							"	B			"
		"	22					0.4 V			"	"							"	C			"
		"	23						0.4 V		"	"							"	D			"
	I_{IL13}	"	24	0.4 V							"								"	U/ $\overline{D}$	3/	3/	"
		"	25		0.4 V						"								"	CK			"
		"	26								"	0.4 V							"	L			"
	I_{IL14}	"	27							0.4 V	"								"	EP	3/	3/	"
	I_{IL15}	"	28								"		0.4 V						"	ET	3/	3/	"
	I_{IL17}	3010	29	2.7 V							"								"	U/ $\overline{D}$		20	"
		"	30		2.7 V						"								"	CK		"	"
		"	31			2.7 V					"								"	A		"	"
		"	32				2.7 V				"								"	B		"	"
		"	33					2.7 V			"								"	C		"	"
		"	34						2.7 V		"								"	D		"	"
		"	35							2.7 V	"								"	EP		"	"
		"	36								"	2.7 V							"	L		"	"
	I_{IH19}	"	37								"		2.7 V						"	ET		40	"

See footnotes at end of device types 05 and 06.

TABLE III. Group A inspection for device types 05 and 06.

Terminal conditions (pins not designated may be H ≥ 2.0 V; or L ≤ 0.7 V; or open).

Subgroup	Symbol	MIL-STD-883 method	Cases E, F	1	2	3	4	5	6	7	8	9	10	11	12	13	14	15	16	Measured terminal	Limits		Unit
			Cases 1/ 2	2	3	4	5	7	8	9	10	12	13	14	15	17	18	19	20		Min	Max	
			Test no.	$U/\overline{D}$	CK	A	B	C	D	EP	GND	L	ET	Q_D	Q_C	Q_B	Q_A	Ripple carry	V_{CC}				
1	I_{IH18}	3010	38	5.5 V							GND								5.5 V	$U/\overline{D}$		100	µA
Tc = +25°C		"	39		5.5 V						"								"	CK		"	"
		"	40			5.5 V					"								"	A		"	"
		"	41				5.5 V				"								"	B		"	"
		"	42					5.5 V			"								"	C		"	"
		"	43						5.5 V		"								"	D		"	"
		"	44							5.5 V	"								"	EP		"	"
		"	45								"	5.5 V							"	L		"	"
	I_{IL20}	"	46								"		5.5 V						"	ET		200	"
	I_{0S}	3011	47	5.5 V	2/	5.5 V	5.5 V	5.5 V	5.5 V	5.5 V	"	GND	5.5 V	GND					"	Q_D	-15	-100	"
		"	48	"	"	"	"	"	"	"	"	"	"		GND				"	Q_C	"	"	"
		"	49	"	"	"	"	"	"	"	"	"	"			GND			"	Q_B	"	"	"
		"	50	"	"	"	"	"	"	"	"	"	"				GND		"	Q_A	"	"	"
		"	51	"	"	"	"	"	"	"	"	"	"					GND	"	Ripple carry	"	"	"
	I_{CC}	3005	52	GND	"	GND	GND	GND	GND	GND	"	5.5 V	GND						"	V_{CC}		34	"
2	Same tests, terminal conditions, and limits as for subgroup 1, except T_C = +125°C and V_{IC} tests are omitted.																						
3	Same tests, terminal conditions, and limits as for subgroup 1, except T_C = -55°C and V_{IC} tests are omitted.																						

See footnotes at end of device types 05 and 06.

TABLE III. Group A inspection for device type 05 – Continued.
Terminal conditions (pins not designated may be H ≥ 2.0 V or L ≤ 0.7 V or open).

Subgroup	Symbol	MIL-STD-883 method	Cases E, F	1	2	3	4	5	6	7	8	9	10	11	12	13	14	15	16	Measured terminal	Limits		Unit
			Cases 1/ 2	2	3	4	5	7	8	9	10	12	13	14	15	17	18	19	20				
			Test no.	$\overline{U/D}$	CK	A	B	C	D	EP	GND	L	ET	Q_D	Q_C	Q_B	Q_A	Ripple carry	V_{CC}		Min	Max	
7 Tc = +25°C	Func- tional tests 4/	3014	53	A 5/	B 5/	B	B	B	B	B	GND	B	B	X	X	X	X	X	4.5 V	See 6/			
		"	54	"	A	"	"	"	"	"	"	B	"	L 5/	L	L	L	H 5/	"				
		"	55	"	B	"	"	"	"	"	"	A	"	"	"	"	L	"	"				
		"	56	"	A	"	"	"	"	"	"	"	"	"	"	"	H	"	"				
		"	57	"	B	"	"	"	"	"	"	"	"	"	"	"	H	"	"				
		"	58	"	A	"	"	"	"	"	"	"	"	"	"	H	L	"	"				
		"	59	"	B	"	"	"	"	"	"	"	"	"	"	"	L	"	"				
		"	60	"	A	"	"	"	"	"	"	"	"	"	"	"	H	"	"				
		"	61	"	B	"	"	"	"	"	"	"	"	"	"	"	H	"	"				
		"	62	"	A	"	"	"	"	"	"	"	"	"	H	L	L	"	"				
		"	63	"	B	"	"	"	"	"	"	"	"	"	"	"	L	"	"				
		"	64	"	A	"	"	"	"	"	"	"	"	"	"	"	H	"	"				
		"	65	"	B	"	"	"	"	"	"	"	"	"	"	"	H	"	"				
		"	66	"	A	"	"	"	"	"	"	"	"	"	"	H	L	"	"				
		"	67	"	B	"	"	"	"	"	"	"	"	"	"	"	L	"	"				
		"	68	"	A	"	"	"	"	"	"	"	"	"	"	"	H	"	"				
		"	69	"	B	"	"	"	"	"	"	"	"	"	"	"	H	"	"				
		"	70	"	A	"	"	"	"	"	"	"	"	H	L	L	L	"	"				
		"	71	"	B	"	"	"	"	"	"	"	"	"	"	"	L	"	"				
		"	72	"	A	"	"	"	"	"	"	"	"	"	"	"	H	L	"				
		"	73	"	B	"	"	"	"	A	"	"	"	"	"	"	"	L	"				
		"	74	"	A	"	"	"	"	A	"	"	"	"	"	"	"	"	"				
		"	75	"	B	"	"	"	"	B	"	"	"	"	"	"	"	"	"				
		"	76	"	A	"	"	"	"	"	"	"	A	"	"	"	"	H	"				
		"	77	"	A	"	"	"	"	"	"	"	A	"	"	"	"	H	"				
		"	78	"	B	"	"	"	"	"	"	"	B	"	"	"	"	L	"				
		"	79	"	A	"	"	"	"	"	"	"	"	L	"	"	L	H	"				
		"	80	"	B	A	"	"	A	"	"	B	"	L	"	"	L	"	"				
		"	81	"	A	"	"	"	"	"	"	B	"	H	"	"	H	L	"				
		"	82	B	B	"	"	"	"	"	"	A	"	"	"	"	H	H	"				
		"	83	"	A	"	"	"	"	"	"	"	"	"	"	"	L	"	"				
		"	84	"	B	"	"	"	"	"	"	"	"	"	"	"	L	"	"				
		"	85	"	A	"	"	"	"	"	"	"	"	L	H	H	H	"	"				
		"	86	"	B	"	"	"	"	"	"	"	"	"	"	"	H	"	"				
		"	87	"	A	"	"	"	"	"	"	"	"	"	"	"	L	"	"				
		"	88	"	B	"	"	"	"	"	"	"	"	"	"	H	L	"	"				
		"	89	"	A	"	"	"	"	"	"	"	"	"	"	L	H	"	"				
		"	90	"	B	"	"	"	"	"	"	"	"	"	"	"	"	"	"				
		"	91	"	A	"	"	"	"	"	"	"	"	"	"	"	L	"	"				
		"	92	"	B	"	"	"	"	"	"	"	"	"	"	"	L	"	"				
		"	93	"	A	"	"	"	"	"	"	"	"	"	L	H	H	"	"				
		"	94	"	B	"	"	"	"	"	"	"	"	"	"	"	H	"	"				
		"	95	"	A	"	"	"	"	"	"	"	"	"	"	"	L	"	"				
		"	96	"	B	"	"	"	"	"	"	"	"	"	"	"	L	"	"				
		"	97	"	A	"	"	"	"	"	"	"	"	"	"	L	H	"	"				
		"	98	"	B	"	"	"	"	"	"	"	"	"	"	"	H	"	"				
		"	99	"	A	"	"	"	"	"	"	"	"	"	"	"	L	L	"				
		"	100	"	B	"	"	"	"	A	"	"	"	"	"	"	"	"	"				
		"	101	"	A	"	"	"	"	A	"	"	"	"	"	"	"	"	"				
		"	102	"	B	"	"	"	"	B	"	"	"	"	"	"	"	"	"				
		"	103	"	B	"	"	"	"	"	"	"	A	"	"	"	"	H	"				
		"	104	"	A	"	"	"	"	"	"	"	A	"	"	"	"	H	"				
		"	105	"	B	"	"	"	"	"	"	"	B	"	"	"	"	L	"				
		"	106	"	B	B	A	A	"	"	"	B	"	"	"	"	"	L	"				
		"	107	"	A	B	A	A	"	"	"	B	"	"	"	H	H	H	"				
8	Repeat subgroup 7 at T_C = +125 and T_C = -55°C.																						

See footnotes at end of device types 05 and 06.

TABLE III. Group A inspection for device type 06 – Continued.
Terminal conditions (pins not designated may be H ≥ 2.0 V or L ≤ 0.7 V or open).

Subgroup	Symbol	MIL-STD-883 method	Cases E, F	1	2	3	4	5	6	7	8	9	10	11	12	13	14	15	16	Measured terminal	Limits		Unit
			Cases 1/ 2	2	3	4	5	7	8	9	10	12	13	14	15	17	18	19	20				
			Test no.	U/ $\overline{D}$	CK	A	B	C	D	EP	GND	L	ET	Q_D	Q_C	Q_B	Q_A	Ripple carry	V_{CC}		Min	Max	
7 Tc = +25°C	Func- tional tests 4/	3014	53	A 5/	B 5/	B	B	B	B	B	GND	B	B	X	X	X	X	X	4.5 V	See 6/			
		"	54	"	A	"	"	"	"	"	"	B	"	L 5/	L	L	L	H 5/	"				
		"	55	"	B	"	"	"	"	"	"	A	"	"	"	"	L	"	"				
		"	56	"	A	"	"	"	"	"	"	"	"	"	"	"	H	"	"				
		"	57	"	B	"	"	"	"	"	"	"	"	"	"	"	H	"	"				
		"	58	"	A	"	"	"	"	"	"	"	"	"	"	H	L	"	"				
		"	59	"	B	"	"	"	"	"	"	"	"	"	"	"	L	"	"				
		"	60	"	A	"	"	"	"	"	"	"	"	"	"	"	H	"	"				
		"	61	"	B	"	"	"	"	"	"	"	"	"	"	"	H	"	"				
		"	62	"	A	"	"	"	"	"	"	"	"	"	H	L	L	"	"				
		"	63	"	B	"	"	"	"	"	"	"	"	"	"	"	L	"	"				
		"	64	"	A	"	"	"	"	"	"	"	"	"	"	"	H	"	"				
		"	65	"	B	"	"	"	"	"	"	"	"	"	"	"	H	"	"				
		"	66	"	A	"	"	"	"	"	"	"	"	"	"	H	L	"	"				
		"	67	"	B	"	"	"	"	"	"	"	"	"	"	"	L	"	"				
		"	68	"	A	"	"	"	"	"	"	"	"	"	"	"	H	"	"				
		"	69	"	B	"	"	"	"	"	"	"	"	"	"	"	H	"	"				
		"	70	"	A	"	"	"	"	"	"	"	"	H	L	L	L	"	"				
		"	71	"	B	"	"	"	"	"	"	"	"	"	"	"	L	"	"				
		"	72	"	A	"	"	"	"	"	"	"	"	"	"	"	H	"	"				
		"	73	"	B	"	"	"	"	"	"	"	"	"	"	"	H	"	"				
		"	74	"	A	"	"	"	"	"	"	"	"	"	"	H	L	"	"				
		"	75	"	B	"	"	"	"	"	"	"	"	"	"	"	L	"	"				
		"	76	"	A	"	"	"	"	"	"	"	"	"	"	"	H	"	"				
		"	77	"	B	"	"	"	"	"	"	"	"	"	"	"	H	"	"				
		"	78	"	A	"	"	"	"	"	"	"	"	"	H	L	L	"	"				
		"	79	"	B	"	"	"	"	"	"	"	"	"	"	"	L	"	"				
		"	80	"	A	"	"	"	"	"	"	"	"	"	"	"	H	"	"				
		"	81	"	B	"	"	"	"	"	"	"	"	"	"	"	H	"	"				
		"	82	"	A	"	"	"	"	"	"	"	"	"	"	H	L	"	"				
		"	83	"	B	"	"	"	"	"	"	"	"	"	"	"	L	"	"				
		"	84	"	A	"	"	"	"	"	"	"	"	"	"	"	H	L	"				
		"	85	"	B	"	"	"	"	A	"	"	"	"	"	"	"	"	"				
		"	86	"	A	"	"	"	"	A	"	"	"	"	"	"	"	"	"				
		"	87	"	B	"	"	"	"	B	"	"	"	"	"	"	"	"	"				
		"	88	"	B	"	"	"	"	"	"	"	A	"	"	"	"	H	"				
		"	89	"	A	"	"	"	"	"	"	"	A	"	"	"	"	H	"				
		"	90	"	B	"	"	"	"	"	"	"	B	"	"	"	"	L	"				
		"	91	"	A	"	"	"	"	"	"	"	"	L	L	L	L	H	"				
		"	92	"	B	A	A	A	A	"	"	B	"	L	L	L	L	H	"				
		"	93	"	A	"	"	"	"	"	"	B	"	H	H	H	H	L	"				
		"	94	B	B	"	"	"	"	"	"	A	"	"	"	"	H	H	"				
		"	95	"	A	"	"	"	"	"	"	"	"	"	"	"	L	"	"				
		"	96	"	B	"	"	"	"	"	"	"	"	"	"	"	L	"	"				
		"	97	"	A	"	"	"	"	"	"	"	"	"	"	L	H	"	"				
		"	98	"	B	"	"	"	"	"	"	"	"	"	"	"	H	"	"				
		"	99	"	A	"	"	"	"	"	"	"	"	"	"	"	L	"	"				
		"	100	"	B	"	"	"	"	"	"	"	"	"	"	"	L	"	"				
		"	101	"	A	"	"	"	"	"	"	"	"	"	L	H	H	"	"				
		"	102	"	B	"	"	"	"	"	"	"	"	"	"	"	H	"	"				
		"	103	"	A	"	"	"	"	"	"	"	"	"	"	"	L	"	"				
		"	104	"	B	"	"	"	"	"	"	"	"	"	"	"	L	"	"				
		"	105	"	A	"	"	"	"	"	"	"	"	"	"	L	H	"	"				
		"	106	"	B	"	"	"	"	"	"	"	"	"	"	"	H	"	"				
		"	107	"	A	"	"	"	"	"	"	"	"	"	"	"	L	"	"				
		"	108	"	B	"	"	"	"	"	"	"	"	"	"	"	L	"	"				

See footnotes at end of device types 05 and 06.

TABLE III. Group A inspection for device type 06 – Continued.
Terminal conditions (pins not designated may be H ≥ 2.0 V or L ≤ 0.7 V or open).

Subgroup	Symbol	MIL-STD-883 method	Cases E, F	1	2	3	4	5	6	7	8	9	10	11	12	13	14	15	16	Measured terminal	Limits		Unit
			Cases 1/ 2	2	3	4	5	7	8	9	10	12	13	14	15	17	18	19	20				
			Test no.	U/ $\overline{D}$	CK	A	B	C	D	EP	GND	L	ET	Q_D	Q_C	Q_B	Q_A	Ripple carry	V_{CC}		Min	Max	
7	Func-	3014	109	B 5/	A 5/	A	A	A	A	B	GND	A	B	L	H	H	H	H	4.5 V				
Tc = +25°C	tional	"	110	"	B	"	"	"	"	"	"	"	"	"	"	"	H	"	"				
	tests	"	111	"	A	"	"	"	"	"	"	"	"	"	"	"	L	"	"				
	4/	"	112	"	B	"	"	"	"	"	"	"	"	"	"	"	L	"	"				
		"	113	"	A	"	"	"	"	"	"	"	"	"	"	L	H	"	"				
		"	114	"	B	"	"	"	"	"	"	"	"	"	"	"	H	"	"				
		"	115	"	A	"	"	"	"	"	"	"	"	"	"	"	L	"	"				
		"	116	"	B	"	"	"	"	"	"	"	"	"	"	"	L	"	"				
		"	117	"	A	"	"	"	"	"	"	"	"	"	L	H	H	"	"				
		"	118	"	B	"	"	"	"	"	"	"	"	"	"	"	H	"	"	See 6/			
		"	119	"	A	"	"	"	"	"	"	"	"	"	"	"	L	"	"				
		"	120	"	B	"	"	"	"	"	"	"	"	"	"	"	L	"	"				
		"	121	"	A	"	"	"	"	"	"	"	"	"	"	L	H	"	"				
		"	122	"	B	"	"	"	"	"	"	"	"	"	"	"	H	"	"				
		"	123	"	A	"	"	"	"	"	"	"	"	"	"	"	L	L	"				
		"	124	"	B	"	"	"	"	A	"	"	"	"	"	"	"	"	"				
		"	125	"	A	"	"	"	"	A	"	"	"	"	"	"	"	"	"				
		"	126	"	B	"	"	"	"	B	"	"	A	"	"	"	"	H	"				
		"	127	"	A	"	"	"	"	"	"	"	A	"	"	"	"	H	"				
		"	128	"	B	"	"	"	"	"	"	"	B	"	"	"	"	L	"				
8	Repeat subgroup 7 at T_C = +125 and T_C = -55°C.																						

See footnotes at end of device types 05 and 06.

TABLE III. Group A inspection for device type 05– Continued.
Terminal conditions (pins not designated may be H ≥ 2.0 V or L ≤ 0.7 V or open).

Subgroup	Symbol	MIL-STD-883 method	Cases E, F	1	2	3	4	5	6	7	8	9	10	11	12	13	14	15	16	Measured terminal	Limits		Unit
			Cases 1/ 2	2	3	4	5	7	8	9	10	12	13	14	15	17	18	19	20				
			Test no.	$\overline{U/D}$	CK	A	B	C	D	EP	GND	L	ET	Q_D	Q_C	Q_B	Q_A	Ripple carry	V_{CC}		Min	Max	
9 Tc = +25°C	t_{PLH5}	See	108	5.0 V	IN 7/	GND	GND	GND	GND	GND	GND	IN 7/	GND				OUT		5.0 V	CK TO Q_A	3	22	ns
		fig. 7	109	"	IN	"	"	"	"	"	"	5.0 V				OUT			"	CK TO Q_B	"	"	"
		"	110	"	IN 2/	"	"	"	"	"	"	"			OUT				"	CK TO Q_C	"	"	"
		"	111	"	IN 8/	"	"	"	"	"	"	"		OUT					"	CK TO Q_D	"	"	"
	t_{PHL5}	"	112	"	IN 7/	5.0 V	"	"	"	"	"	IN					OUT		"	CK TO Q_A	"	"	"
		"	113	"	"	"	5.0 V	"	"	"	"	"				OUT			"	CK TO Q_B	"	"	"
		"	114	"	"	"	"	5.0 V	"	"	"	"			OUT				"	CK TO Q_C	"	"	"
		"	115	"	"	"	"	"	5.0 V	"	"	"		OUT					"	CK TO Q_D	"	"	"
	t_{PHL15}	"	116	"	"	"	"	"	"	"	"	"						OUT	"	CK TO RC	"	32	"
	t_{PLH12}	"	117	"	IN	"	"	"	"	"	"	5.0 V						OUT	"	CK TO RC	"	30	"
	t_{PLH5}	"	118	GND	IN 9/	IN	GND	GND	GND	"	"	GND					OUT		"	CK TO Q_A	"	22	"
	t_{PHL5}	"	119	"	IN	GND	GND	"	"	"	"						OUT		"	CK TO Q_A	"	"	"
	t_{PLH5}	"	120	"	"	"	5.0 V	"	"	"	"					OUT			"	CK TO Q_B	"	"	"
	t_{PHL5}	"	121	"	"	"	GND	"	"	"	"					OUT			"	CK TO Q_B	"	"	"
	t_{PLH5}	"	122	"	"	"	"	5.0 V	"	"	"				OUT				"	CK TO Q_C	"	"	"
	t_{PHL5}	"	123	"	"	"	"	GND	"	"	"				OUT				"	CK TO Q_C	"	"	"
	t_{PLH5}	"	124	"	"	"	"	"	5.0 V	"	"			OUT					"	CK TO Q_D	"	"	"
	t_{PHL5}	"	125	"	"	"	"	"	GND	"	"			OUT					"	CK TO Q_D	"	"	"
	t_{PHL7}	"	126	5.0 V	IN 7/	5.0 V	"	"	5.0 V	"	"	IN	IN					OUT	"	ET to RC	"	24	"
	t_{PLH7}	"	127	5.0 V	GND	"	"	"	"	"	"	5.0 V	IN					OUT	"	ET to RC	"	15	"
	t_{PHL11}	"	128	IN	IN 7/	"	"	"	"	"	"	IN	GND					OUT	"	$\overline{U/D}$ to RC	"	28	"
	t_{PLH9}	"	129	IN	GND	"	"	"	"	"	"	5.0 V	GND						"	$\overline{U/D}$ to RC	"	22	"
	t_{PHL7}	"	130	GND	IN 7/	GND	"	"	GND	"	"	IN	IN						"	ET to RC	"	24	"
	t_{PLH7}	"	131	GND	GND	"	"	"	"	"	"	5.0 V	IN						"	ET to RC	"	15	"
	t_{PHL11}	"	132	IN	IN 7/	"	"	"	"	"	"	IN	GND						"	$\overline{U/D}$ to RC	"	28	"
	t_{PLH9}	"	133	IN	GND	"	"	"	"	"	"	5.0 V							"	$\overline{U/D}$ to RC	"	22	"
	F_{MAX} 10/	"	134	5.0 V	IN					"	"	5.0 V		OUT	OUT	OUT	OUT		"	CK to Q_n	25		MHz
	F_{MAX} 10/	"	135	GND	IN					"	"	5.0 V		OUT	OUT	OUT	OUT		"	CK to Q_n	25		MHz

See footnotes at end of device types 05 and 06.

TABLE III. Group A inspection for device type 05– Continued.
Terminal conditions (pins not designated may be H ≥ 2.0 V or L ≤ 0.7 V or open).

Subgroup	Symbol	MIL-STD-883 method	Cases E, F	1	2	3	4	5	6	7	8	9	10	11	12	13	14	15	16	Measured terminal	Limits		Unit
			Cases 1/ 2	2	3	4	5	7	8	9	10	12	13	14	15	17	18	19	20				
			Test no.	U/ $\overline{D}$	CK	A	B	C	D	EP	GND	L	ET	Q_D	Q_C	Q_B	Q_A	Ripple carry	V_{CC}		Min	Max	
10	t_{PLH5}	See	136																	CK TO Q_A	3	26	ns
Tc = +125°C		fig. 7	137																	CK TO Q_B	"	"	"
		"	138																	CK TO Q_C	"	"	"
		"	139																	CK TO Q_D	"	"	"
	t_{PHL5}	"	140																	CK TO Q_A	"	"	"
		"	141																	CK TO Q_B	"	"	"
		"	142																	CK TO Q_C	"	"	"
		"	143																	CK TO Q_D	"	"	"
	t_{PHL15}	"	144																	CK TO RC	"	37	"
	t_{PLH12}	"	145																	CK TO RC	"	35	"
	t_{PLH5}	"	146																	CK TO Q_A	"	26	"
	t_{PHL5}	"	147																	CK TO Q_A	"	"	"
	t_{PLH5}	"	148																	CK TO Q_B	"	"	"
	t_{PHL5}	"	149																	CK TO Q_B	"	"	"
	t_{PLH5}	"	150																	CK TO Q_C	"	"	"
	t_{PHL5}	"	151																	CK TO Q_C	"	"	"
	t_{PLH5}	"	152																	CK TO Q_D	"	"	"
	t_{PHL5}	"	153																	CK TO Q_D	"	"	"
	t_{PHL7}	"	154																	ET to RC	"	28	"
	t_{PLH7}	"	155																	ET to RC	"	18	"
	t_{PHL11}	"	156																	U/ $\overline{D}$ to RC	"	33	"
	t_{PLH9}	"	157																	U/ $\overline{D}$ to RC	"	26	"
	t_{PHL7}	"	158																	ET to RC	"	28	"
	t_{PLH7}	"	159																	ET to RC	"	18	"
	t_{PHL11}	"	160																	U/ $\overline{D}$ to RC	"	33	"
	t_{PLH9}	"	161																	U/ $\overline{D}$ to RC	"	26	"
	F_{MAX}	"	162																	CK to Q_n	25		MHz
	F_{MAX}	"	163																	CK to Q_n	25		MHz
11	Same tests, conditions and limits as for subgroup 10 except T_C = -55°C and V_{CC} = 4.5 for F_{MAX}.																						

Same conditions as for subgroup 9.

See footnotes at end of device types 05 and 06.

TABLE III. Group A inspection for device type 06.

Terminal conditions (pins not designated may be H ≥ 2.0 V or L ≤ 0.7 V or open).

Subgroup	Symbol	MIL-STD-883 method	Cases E, F	1	2	3	4	5	6	7	8	9	10	11	12	13	14	15	16	Measured terminal	Limits		Unit
			Cases 1/ 2	2	3	4	5	7	8	9	10	12	13	14	15	17	18	19	20				
			Test no.	$\overline{U/D}$	CK	A	B	C	D	EP	GND	L	ET	Q_D	Q_C	Q_B	Q_A	Ripple carry	V_{CC}		Min	Max	
9	t_{PLH5}	See	129	5.0 V	IN 7/	GND	GND	GND	GND	GND	GND	IN	GND				OUT		5.0 V	CK TO Q_A	3	22	ns
Tc = +25°C		fig. 7	130	"	"	5.0 V	"	"	"	"	"	"	"			OUT			"	CK TO Q_B	"	"	"
		"	131	"	"	"	5.0 V	"	"	"	"	"	"		OUT				"	CK TO Q_C	"	"	"
		"	132	"	"	"	"	5.0 V	"	"	"	"	"	OUT					"	CK TO Q_D	"	"	"
	t_{PHL5}	"	133	"	" 7/	5.0 V	GND	GND	GND	"	GND	IN	GND				OUT		"	CK TO Q_A	"	32	"
		"	134	"	"	"	5.0 V	"	"	"	"	"	"			OUT			"	CK TO Q_B	"	"	"
		"	135	"	"	"	"	5.0 V	"	"	"	"	"		OUT				"	CK TO Q_C	"	"	"
		"	136	"	"	"	"	"	5.0 V	"	"	"	"	OUT					"	CK TO Q_D	"	"	"
	t_{PHL15}	"	137	"	"	GND	"	"	"	"	"	"	"					OUT	"	CK TO RC	"	35	"
	t_{PLH12}	"	138	"	"	GND	"	"	"	"	"	5.0 V	"					OUT	"	CK TO RC	"	33	"
	t_{PLH5}	"	139	GND	"	5.0 V	GND	GND	GND	"	"	5.0 V	"				OUT		"	CK TO Q_A	"	22	"
	t_{PHL5}	"	140	"	"	GND	GND	"	"	"	"	"	"				OUT		"	CK TO Q_A	"	32	"
	t_{PLH5}	"	141	"	"	"	5.0 V	"	"	"	"	"	"			OUT			"	CK TO Q_B	"	22	"
	t_{PHL5}	"	142	"	"	"	GND	"	"	"	"	"	"			OUT			"	CK TO Q_B	"	32	"
	t_{PLH5}	"	143	"	"	"	"	5.0 V	"	"	"	"	"		OUT				"	CK TO Q_C	"	22	"
	t_{PHL5}	"	144	"	"	"	"	GND	"	"	"	"	"		OUT				"	CK TO Q_C	"	32	"
	t_{PLH5}	"	145	"	"	"	"	"	5.0 V	"	"	"	"	OUT					"	CK TO Q_D	"	22	"
	t_{PHL5}	"	146	"	"	"	"	"	GND	"	"	"	"	OUT					"	CK TO Q_D	"	32	"
	t_{PHL7}	"	147	5.0 V	" 7/	5.0 V	5.0 V	5.0 V	5.0 V	"	"	5.0 V	IN					OUT	"	ET to RC	"	28	"
	t_{PLH7}	"	148	5.0 V	"	"	"	"	"	"	"	5.0 V	IN					OUT	"	ET to RC	"	24	"
	t_{PHL11}	"	149	IN	IN 7/	"	"	"	"	"	"	5.0 V	GND					OUT	"	$\overline{U/D}$ to RC	"	32	"
	t_{PLH9}	"	150	IN	IN	"	"	"	"	"	"	5.0 V	GND					"	"	$\overline{U/D}$ to RC	"	28	"
	t_{PHL7}	"	151	GND	IN 7/	GND	GND	GND	GND	"	"	5.0 V	IN					"	"	ET to RC	"	28	"
	t_{PLH7}	"	152	GND	IN	"	"	"	"	"	"	5.0 V	IN					"	"	ET to RC	"	24	"
	t_{PHL11}	"	153	IN	IN 7/	"	"	"	"	"	"	5.0 V	GND					"	"	$\overline{U/D}$ to RC	"	32	"
	t_{PLH9}	"	154	IN	IN	"	"	"	"	"	"	5.0 V	"					"	"	$\overline{U/D}$ to RC	"	22	"
	F_{MAX}	"	155	5.0 V	IN	"	"	"	"	"	"	5.0 V	"	OUT	OUT	OUT	OUT		"	CK to Q_n	25		MHz
	F_{MAX}	"	156	GND	IN	5.0 V	5.0 V	5.0 V	5.0 V	"	"	5.0 V	"	OUT	OUT	OUT	OUT		"	CK to Q_n	25		MHz

See footnotes at end of device types 05 and 06.

TABLE III. Group A inspection for device type 06.

Terminal conditions (pins not designated may be H ≥ 2.0 V or L ≤ 0.7 V or open).

Subgroup	Symbol	MIL-STD-883 method	Cases E, F	1	2	3	4	5	6	7	8	9	10	11	12	13	14	15	16	Measured terminal	Limits		Unit
			Cases 1/ 2	2	3	4	5	7	8	9	10	12	13	14	15	17	18	19	20				
			Test no.	U/ $\overline{D}$	CK	A	B	C	D	EP	GND	L	ET	Q_D	Q_C	Q_B	Q_A	Ripple carry	V_{CC}		Min	Max	
10 Tc = +125°C	t_{PLH5}	See fig. 7	157	Same conditions as for subgroup 9.																CK TO Q_A	3	26	ns
			158																	CK TO Q_B	"	"	"
		"	159																	CK TO Q_C	"	"	"
		"	160																	CK TO Q_D	"	"	"
	t_{PHL5}	"	161																	CK TO Q_A	"	36	"
		"	162																	CK TO Q_B	"	"	"
		"	163																	CK TO Q_C	"	"	"
		"	164																	CK TO Q_D	"	"	"
	t_{PHL15}	"	165																	CK TO RC	"	40	"
	t_{PLH12}	"	166																	CK TO RC	"	38	"
	t_{PLH5}	"	167																	CK TO Q_A	"	26	"
	t_{PHL5}	"	168																	CK TO Q_A	"	36	"
	t_{PLH5}	"	169																	CK TO Q_B	"	26	"
	t_{PHL5}	"	170																	CK TO Q_B	"	36	"
	t_{PLH5}	"	171																	CK TO Q_C	"	26	"
	t_{PHL5}	"	172																	CK TO Q_C	"	36	"
	t_{PLH5}	"	173																	CK TO Q_D	"	26	"
	t_{PHL5}	"	174																	CK TO Q_D	"	36	"
	t_{PHL7}	"	175																	ET to RC	"	32	"
	t_{PLH7}	"	176																	ET to RC	"	28	"
	t_{PHL11}	"	177																	U/ $\overline{D}$ to RC	"	37	"
	t_{PLH9}	"	178																	U/ $\overline{D}$ to RC	"	32	"
	t_{PHL7}	"	179																	ET to RC	"	32	"
	t_{PLH7}	"	180																	ET to RC	"	28	"
	t_{PHL11}	"	181																	U/ $\overline{D}$ to RC	"	37	"
	t_{PLH9}	"	182																	U/ $\overline{D}$ to RC	"	32	"
	F_{MAX}	"	183																	CK to Q_n	25		MHz
	F_{MAX}	"	184																	CK to Q_n	25		MHz
11	Same tests, conditions and limits as for subgroup 10 except T_C = -55°C and V_{CC} = 4.5 for F_{MAX}.																						

See footnotes at end of device types 05 and 06.

1/ Case 2, pins not referenced are N/C.

2/ Apply one clock pulse prior to test as follows:

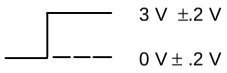

3/ I_{IL} limits (µA) min/max values for circuits shown:

Parameter	Terminals	Circuits						
		A	B	C	D	E	F	G
I_{IL12}	A, B, C, D			-160/-400		-0.5/-400		
I_{IL13}	U/$\overline{D}$, CK, L			-160/-400		-135/-370		
I_{IL14}	EP			160/-400		-150/-385		
I_{IL15}	ET			-140/-720		-280/-760		

4/ Only a summary of attributes data is required.

5/ A = 3.0 V minimum; B = 0.0 V or GND.

6/ H > 1.5 V; L < 1.5 V; X = don't care.

7/ Apply one clock pulse with "L" low prior to test.

8/ Apply three clock pulses prior to test.

9/ Apply one clock pulse with "A" low prior to test.

10/ On (Q_A, Q_B, Q_C, and Q_D) shall respond as specified in the truth table with the minimum F_{MAX} frequency input to "CK".

TABLE III. Group A inspection for device types 07 and 08.

Terminal conditions (pins not designated may be H ≥ 2.0 V; or L ≤ 0.7 V; or open).

Subgroup	Symbol	MIL-STD-883 method	Cases E, F	1	2	3	4	5	6	7	8	9	10	11	12	13	14	15	16	Measured terminal	Limits		Unit
			Cases 1/ 2	2	3	4	5	7	8	9	10	12	13	14	15	17	18	19	20		Min	Max	
			Test no.	B	Q_B	Q_A	Count down	Count Up	Q_C	Q_D	GND	D	C	Load	Ripple Carry	Borrow	Clear	A	V_{CC}				
1 Tc = +25°C	V_{OL}	3007	1			4 mA					GND			0.7 V			0.7 V	0.7 V	4.5 V	Q_A		0.4	V
	"		2	0.7 V	4 mA						"			"			"		"	Q_B		"	"
	"		3						4 mA		"		0.7 V	"			"		"	Q_C		"	"
	"		4							4 mA	"	0.7 V	"	"			"		"	Q_D		"	"
	"		5	2/				0.7 V			"	2.0 V	2/	"	4 mA		"	2.0 V	4.5 V	Ripple carry		"	"
	"		6				0.7 V				"					4 mA	2.0 V		4.5 V	Borrow		"	"
	V_{OH}	3006	7			-0.4 mA					"			0.7 V			0.7 V	2.0 V	"	Q_A	2.5		"
	"		8	2.0 V	-0.4 mA						"			"			"		"	Q_B	"		"
	"		9						-0.4 mA		"		2.0 V	"			"		"	Q_C	"		"
	"		10							-0.4 mA	"	2.0 V		"			"		"	Q_D	"		"
	"		11					2.0 V			"				-0.4 mA		"		"	Ripple Carry	"		"
	"		12				2.0 V				"					-0.4 mA			"	Borrow	"		"
	V_{IC}		13								"							-18 mA	"	A		-1.5	"
			14	-18 mA							"								"	B		"	"
			15								"		-18 mA						"	C		"	"
			16								"	-18 mA							"	D		"	"
			17								"			-18 mA					"	Load		"	"
			18								"						-18 mA		"	Clear		"	"
			19					-18 mA			"								"	Count up		"	"
			20				-18 mA				"								"	Count down		"	"
	I_{IL9}	3009	21								"			GND			GND	0.4 V	5.5 V	A	3/	3/	µA
	"		22	0.4 V							"			"			"		"	B	"	"	"
	"		23								"		0.4 V	"			"		"	C	"	"	"
	"		24								"	0.4 V		"			"		"	D	"	"	"
	I_{IL10}	"	25								"			0.4 V					"	Load	"	"	"
	I_{IL11}	"	26								"						0.4 V		"	Clear	"	"	"
	"		27					0.4 V			"								"	Count up	"	"	"
	"		28				0.4 V				"								"	Count down	"	"	"
	I_{IH17}	3010	29								"			5.5 V			5.5 V	2.7 V	"	A		20	"
	"		30	2.7 V							"			"			"		"	B		"	"
	"		31								"		2.7 V	"			"		"	C		"	"
	"		32								"	2.7 V		"			"		"	D		"	"
	"		33								"			2.7 V					"	Load		"	"
	"		34								"						2.7 V		"	Clear		"	"
	"		35					2.7 V			"								"	Count up		"	"
	"		36				2.7 V				"								"	Count down		"	"
	I_{IH18}	"	37								"			5.5 V			5.5 V	5.5 V	"	A		100	"
	"		38	5.5 V							"			"			"		"	B		"	"
	"		39								"		5.5 V	"			"		"	C		"	"
	"		40								"	5.5 V		"			"		"	D		"	"
	"		41								"			"					"	Load		"	"
	"		42								"						5.5 V		"	Clear		"	"
	"		43					5.5 V			"								"	Count up		"	"
	"		44				5.5 V				"								"	Count down		"	"

See footnotes at end of device types 07 and 08.

TABLE III. Group A inspection for device types 07 and 08 – Continued.
Terminal conditions (pins not designated may be H ≥ 2.0 V; or L ≤ 0.7 V; or open).

Subgroup	Symbol	MIL-STD-883 method	Cases E, F	1	2	3	4	5	6	7	8	9	10	11	12	13	14	15	16	Measured terminal	Limits		Unit
			Cases 1/ 2	2	3	4	5	7	8	9	10	12	13	14	15	17	18	19	20		Min	Max	
			Test no.	B	Q_B	Q_A	Count down	Count Up	Q_C	Q_D	GND	D	C	Load	Ripple Carry	Borrow	Clear	A	V_{CC}				
1 Tc = +25°C	I_{OS}	3011	45			GND					GND			GND			GND	5.5 V	5.5 V	Q_A	4/	4/	mA
		"	46	5.5 V	GND						"			"			"		"	Q_B	"	"	"
		"	47						GND		"		5.5 V	"			"		"	Q_C	"	"	"
		"	48							GND	"	5.5 V		"			"		"	Q_D	"	"	"
		"	49					5.5 V			"				GND		"		"	Ripple carry	"	"	"
		"	50				5.5 V				"					GND			"	Borrow	"	"	"
	I_{CC}	3005	51								"			GND			GND		"	V_{CC}		34	"
2	Same tests, terminal conditions, and limits as for subgroup 1, except T_C = +125°C and V_{IC} tests are omitted.																						
3	Same tests, terminal conditions, and limits as for subgroup 1, except T_C = -55°C and V_{IC} tests are omitted.																						

See footnotes at end of device types 07 and 08.

TABLE III. Group A inspection for device types 07 – Continued.
Terminal conditions (pins not designated may be H ≥ 2.0 V; or L ≤ 0.7 V; or open).

Subgroup	Symbol	MIL-STD-883 method	Cases E, F	1	2	3	4	5	6	7	8	9	10	11	12	13	14	15	16	Measured terminal	Limits		Unit
			Cases 1/ 2	2	3	4	5	7	8	9	10	12	13	14	15	17	18	19	20		Min	Max	
			Test no.	B	Q_B	Q_A	Count down	Count Up	Q_C	Q_D	GND	D	C	Load	Ripple Carry	Borrow	Clear	A	V_{CC}				
7	Func-	3014	52	A 6/	L	L	A	A	L	L	GND	A	A	A	H	H	A	A	4.5 V	See 7/			
Tc = +25°C	tional	"	53	"	"	L	"	A	"	"	"	"	"	"	"	"	B 6/	"	"				
	tests	"	54	"	"	L	"	B	"	"	"	"	"	"	"	"	"	"	"				
	5/	"	55	"	"	H	"	A	"	"	"	"	"	"	"	"	"	"	"				
		"	56	"	"	H	"	B	"	"	"	"	"	"	"	"	"	"	"				
		"	57	"	H	L	"	A	"	"	"	"	"	"	"	"	"	"	"				
		"	58	"	"	L	"	B	"	"	"	"	"	"	"	"	"	"	"				
		"	59	"	"	H	"	A	"	"	"	"	"	"	"	"	"	"	"				
		"	60	"	"	H	"	B	"	"	"	"	"	"	"	"	"	"	"				
		"	61	"	L	L	"	A	H	"	"	"	"	"	"	"	"	"	"				
		"	62	"	"	L	"	B	"	"	"	"	"	"	"	"	"	"	"				
		"	63	"	"	H	"	A	"	"	"	"	"	"	"	"	"	"	"				
		"	64	"	"	H	"	B	"	"	"	"	"	"	"	"	"	"	"				
		"	65	"	H	L	"	A	"	"	"	"	"	"	"	"	"	"	"				
		"	66	"	"	L	"	B	"	"	"	"	"	"	"	"	"	"	"				
		"	67	"	"	H	"	A	"	"	"	"	"	"	"	"	"	"	"				
		"	68	"	"	H	"	B	"	"	"	"	"	"	"	"	"	"	"				
		"	69	"	L	L	"	A	L	H	"	"	"	"	"	"	"	"	"				
		"	70	"	"	L	"	B	"	"	"	"	"	"	"	"	"	"	"				
		"	71	"	"	H	"	A	"	"	"	"	"	"	"	"	"	"	"				
		"	72	"	"	H	"	B	"	"	"	"	"	"	L	"	"	"	"				
		"	73	"	"	L	"	A	"	L	"	"	"	"	H	"	"	"	"				
		"	74	"	"	L	B	"	"	L	"	"	"	"	"	L	"	"	"				
		"	75	"	"	H	A	"	"	H	"	"	"	"	"	H	"	"	"				
		"	76	"	"	H	B	"	"	"	"	"	"	"	"	H	"	"	"				
		"	77	"	"	L	A	"	"	"	"	"	"	"	"	"	"	"	"				
		"	78	"	"	L	B	"	"	"	"	"	"	"	"	"	"	"	"				
		"	79	"	H	H	A	"	H	L	"	"	"	"	"	"	"	"	"				
		"	80	"	"	H	B	"	"	"	"	"	"	"	"	"	"	"	"				
		"	81	"	"	L	A	"	"	"	"	"	"	"	"	"	"	"	"				
		"	82	"	"	L	B	"	"	"	"	"	"	"	"	"	"	"	"				
		"	83	"	L	H	A	"	"	"	"	"	"	"	"	"	"	"	"				
		"	84	"	"	H	B	"	"	"	"	"	"	"	"	"	"	"	"				
		"	85	"	"	L	A	"	"	"	"	"	"	"	"	"	"	"	"				
		"	86	"	"	L	B	"	"	"	"	"	"	"	"	"	"	"	"				
		"	87	"	H	H	A	"	L	"	"	"	"	"	"	"	"	"	"				
		"	88	"	"	H	B	"	"	"	"	"	"	"	"	"	"	"	"				
		"	89	"	"	L	A	"	"	"	"	"	"	"	"	"	"	"	"				
		"	90	"	"	L	B	"	"	"	"	"	"	"	"	"	"	"	"				
		"	91	"	L	H	A	"	"	"	"	"	"	"	"	"	"	"	"				
		"	92	"	"	H	B	"	"	"	"	"	"	"	"	"	"	"	"				
		"	93	"	"	L	A	"	"	"	"	"	"	"	"	"	"	"	"				
		"	94	"	"	L	B	"	"	"	"	"	"	"	"	L	"	"	"				
		"	95	"	"	H	A	"	"	H	"	"	"	"	"	H	"	"	"				
		"	96	"	H	H	"	"	H	H	"	"	"	B	"	"	"	"	"				
		"	97	"	L	L	"	"	L	L	"	"	"	"	"	"	A	"	"				
		"	98	"	H	H	"	"	H	H	"	"	"	"	"	"	B	"	"				
		"	99	"	H	H	"	"	H	H	"	"	"	A	"	"	B	"	"				
		"	100	"	L	L	"	"	L	L	"	"	"	"	"	"	A	"	"				
		"	101	"	L	L	"	"	L	L	"	"	"	"	"	"	B	"	"				

See footnotes at end of device types 07 and 08.

TABLE III. Group A inspection for device types 07 – Continued.
Terminal conditions (pins not designated may be high ≥ 2.0 V; or low ≤ 0.7 V; or open).

Subgroup	Symbol	MIL-STD-883 method	Cases E, F	1	2	3	4	5	6	7	8	9	10	11	12	13	14	15	16	Measured terminal	Limits		Unit
			Cases 1/ 2	2	3	4	5	7	8	9	10	12	13	14	15	17	18	19	20		Min	Max	
			Test no.	B	Q_B	Q_A	Count down	Count Up	Q_C	Q_D	GND	D	C	Load	Ripple Carry	Borrow	Clear	A	V_{CC}				
7 T_C = +25°C	Func-tional tests 5/	3014	102	A 6/	H	H	A	A	H	H	GND	A	A	B 6/	H	H	B	A	4.5 V	See 7/			
	"	"	103	A	"	"	"	"	"	"	"	A	A	A	"	"	"	A	"				
	"	"	104	B	"	"	"	"	"	"	"	B	B	A	"	"	"	B	"				
	"	"	105	"	L	L	"	"	L	L	"	"	"	B	"	"	"	"	"				
	"	"	106	"	"	"	B	"	"	"	"	"	"	"	"	L	"	"	"				
	"	"	107	"	"	"	A	"	"	"	"	"	"	"	"	H	"	"	"				
	"	"	108	"	"	"	"	B	"	"	"	"	"	"	"	"	"	"	"				
	"	"	109	"	"	"	"	A	"	"	"	"	"	"	"	"	"	"	"				
	"	"	110	"	"	"	"	"	"	"	"	"	"	A	"	"	"	"	"				
	"	"	111	"	"	"	"	"	"	"	"	"	"	"	"	"	A	"	"				
	"	"	112	"	"	"	B	"	"	"	"	"	"	"	"	L	"	"	"				
	"	"	113	"	"	"	A	"	"	"	"	"	"	"	"	H	"	"	"				
	"	"	114	"	"	"	A	B	"	"	"	"	"	"	"	"	"	"	"				
	"	"	115	"	"	"	A	A	"	"	"	"	"	"	"	"	"	"	"				
8	Repeat subgroup 7 at T_C = +125 and T_C = -55°C.																						

See footnotes at end of device types 07 and 08.

TABLE III. Group A inspection for device types 08 – Continued.
Terminal conditions (pins not designated may be high ≥ 2.0 V; or low ≤ 0.7 V; or open).

Subgroup	Symbol	MIL-STD-883 method	Cases E, F	1	2	3	4	5	6	7	8	9	10	11	12	13	14	15	16	Measured terminal	Limits		Unit
			Cases 1/ 2	2	3	4	5	7	8	9	10	12	13	14	15	17	18	19	20		Min	Max	
			Test no.	B	Q_B	Q_A	Count down	Count Up	Q_C	Q_D	GND	D	C	Load	Ripple Carry	Borrow	Clear	A	V_{CC}				
7	Func-	3014	52	B 6/	L	L	A 6/	A	L	L	GND	B	B	B	H	H	B	B	4.5 V	See 7/			
Tc = +25°C	tional	"	53	"	"	L	"	"	"	"	"	"	"	A	"	"	"	B	"				
	tests	"	54	"	"	H	"	"	"	"	"	"	"	B	"	"	"	A	"				
	5/	"	55	"	"	H	"	"	"	"	"	"	"	A	"	"	"	A	"				
		"	56	A	H	L	"	"	"	"	"	"	"	B	"	"	"	B	"				
		"	57	"	"	L	"	"	"	"	"	"	"	A	"	"	"	B	"				
		"	58	"	"	H	"	"	"	"	"	"	"	B	"	"	"	A	"				
		"	59	"	"	H	"	"	"	"	"	"	"	A	"	"	"	A	"				
		"	60	B	L	L	"	"	H	"	"	"	A	B	"	"	"	B	"				
		"	61	"	"	L	"	"	"	"	"	"	"	A	"	"	"	B	"				
		"	62	"	"	H	"	"	"	"	"	"	"	B	"	"	"	A	"				
		"	63	"	"	H	"	"	"	"	"	"	"	A	"	"	"	A	"				
		"	64	A	H	L	"	"	"	"	"	"	"	B	"	"	"	B	"				
		"	65	"	"	L	"	"	"	"	"	"	"	A	"	"	"	B	"				
		"	66	"	"	H	"	"	"	"	"	"	"	B	"	"	"	A	"				
		"	67	"	"	H	"	"	"	"	"	"	"	A	"	"	"	A	"				
		"	68	B	L	L	"	"	L	H	"	A	B	B	"	"	"	B	"				
		"	69	"	"	L	"	"	"	"	"	"	"	A	"	"	"	B	"				
		"	70	"	"	H	"	"	"	"	"	"	"	B	"	"	"	A	"				
		"	71	"	"	H	"	"	"	"	"	"	"	A	"	"	"	A	"				
		"	72	A	H	L	"	"	"	"	"	"	"	B	"	"	"	B	"				
		"	73	"	"	L	"	"	"	"	"	"	"	A	"	"	"	B	"				
		"	74	"	"	H	"	"	"	"	"	"	"	B	"	"	"	A	"				
		"	75	"	"	H	"	"	"	"	"	"	"	A	"	"	"	A	"				
		"	76	B	L	L	"	"	H	"	"	"	A	B	"	"	"	B	"				
		"	77	"	"	L	"	"	"	"	"	"	"	A	"	"	"	B	"				
		"	78	"	"	H	"	"	"	"	"	"	"	B	"	"	"	A	"				
		"	79	"	"	H	"	"	"	"	"	"	"	A	"	"	"	A	"				
		"	80	A	H	L	"	"	"	"	"	"	"	B	"	"	"	B	"				
		"	81	"	"	L	"	"	"	"	"	"	"	A	"	"	"	B	"				
		"	82	"	"	H	"	"	"	"	"	"	"	B	"	"	"	A	"				
		"	83	"	L	L	"	"	L	L	"	"	"	B	"	"	A	"	"				
		"	84	"	"	"	"	"	"	"	"	"	"	A	"	"	A	"	"				
		"	85	"	"	"	"	"	"	"	"	"	"	"	"	"	B	"	"				
		"	86	"	"	"	B	"	"	"	"	"	"	"	"	L	"	"	"				
		"	87	"	H	H	A	"	H	H	"	"	"	"	"	H	"	"	"				
		"	88	"	"	H	B	"	"	"	"	"	"	"	"	"	"	"	"				
		"	89	"	"	L	A	"	"	"	"	"	"	"	"	"	"	"	"				
		"	90	"	"	L	B	"	"	"	"	"	"	"	"	"	"	"	"				
		"	91	"	L	H	A	"	"	"	"	"	"	"	"	"	"	"	"				
		"	92	"	"	H	B	"	"	"	"	"	"	"	"	"	"	"	"				
		"	93	"	"	L	A	"	"	"	"	"	"	"	"	"	"	"	"				
		"	94	"	"	L	B	"	"	"	"	"	"	"	"	"	"	"	"				
		"	95	"	H	H	A	"	L	"	"	"	"	"	"	"	"	"	"				
		"	96	"	"	H	B	"	"	"	"	"	"	"	"	"	"	"	"				
		"	97	"	"	L	A	"	"	"	"	"	"	"	"	"	"	"	"				
		"	98	"	"	L	B	"	"	"	"	"	"	"	"	"	"	"	"				
		"	99	"	L	H	A	"	"	"	"	"	"	"	"	"	"	"	"				
		"	100	"	"	H	B	"	"	"	"	"	"	"	"	"	"	"	"				
		"	101	"	"	L	A	"	"	"	"	"	"	"	"	"	"	"	"				
		"	102	"	"	L	B	"	"	"	"	"	"	"	"	"	"	"	"				
		"	103	"	H	H	A	"	H	L	"	"	"	"	"	"	"	"	"				
		"	104	"	"	H	B	"	"	"	"	"	"	"	"	"	"	"	"				
		"	105	"	"	L	A	"	"	"	"	"	"	"	"	"	"	"	"				
		"	106	"	"	L	B	"	"	"	"	"	"	"	"	"	"	"	"				
		"	107	"	L	H	A	"	"	"	"	"	"	"	"	"	"	"	"				

See footnotes at end of device types 07 and 08.

TABLE III. Group A inspection for device types 08 – Continued.
Terminal conditions (pins not designated may be H ≥ 2.0 V; or L ≤ 0.7 V; or open).

Subgroup	Symbol	MIL-STD-883 method	Cases E, F	1	2	3	4	5	6	7	8	9	10	11	12	13	14	15	16	Measured terminal	Limits		Unit
			Cases 1/ 2	2	3	4	5	7	8	9	10	12	13	14	15	17	18	19	20		Min	Max	
			Test no.	B	Q_B	Q_A	Count down	Count Up	Q_C	Q_D	GND	D	C	Load	Ripple Carry	Borrow	Clear	A	V_{CC}				
7 T_C = +25°C	Func-tional tests 5/	3014	108	A 6/	L	H	B 6/	A	H	L	GND	A	A	A	H	H	B 8/	A	4.5 V	See 7/			
	"		109	"	"	L	A	"	"	"	"	"	"	"	"	"	"	"	"				
	"		110	"	"	L	B	"	"	"	"	"	"	"	"	"	"	"	"				
	"		111	"	H	H	A	"	L	"	"	"	"	"	"	"	"	"	"				
	"		112	"	"	H	B	"	"	"	"	"	"	"	"	"	"	"	"				
	"		113	"	"	L	A	"	"	"	"	"	"	"	"	"	"	"	"				
	"		114	"	"	L	B	"	"	"	"	"	"	"	"	"	"	"	"				
	"		115	"	L	H	A	"	"	"	"	"	"	"	"	"	"	"	"				
	"		116	"	"	H	B	"	"	"	"	"	"	"	"	"	"	"	"				
	"		117	"	"	L	A	"	"	"	"	"	"	"	"	"	"	"	"				
	"		118	"	"	L	"	B	"	"	"	"	"	"	"	"	"	"	"				
	"		119	"	"	H	"	A	"	"	"	"	"	"	"	"	"	"	"				
	"		120	"	"	H	"	B	"	"	"	"	"	"	"	"	"	"	"				
	"		121	"	H	L	"	A	"	"	"	"	"	"	"	"	"	"	"				
	"		122	"	"	L	"	B	"	"	"	"	"	"	"	"	"	"	"				
	"		123	"	"	H	"	A	"	"	"	"	"	"	"	"	"	"	"				
	"		124	"	"	H	"	B	"	"	"	"	"	"	"	"	"	"	"				
	"		125	"	L	L	"	A	H	"	"	"	"	"	"	"	"	"	"				
	"		126	"	"	L	"	B	"	"	"	"	"	"	"	"	"	"	"				
	"		127	"	"	H	"	A	"	"	"	"	"	"	"	"	"	"	"				
	"		128	"	"	H	"	B	"	"	"	"	"	"	"	"	"	"	"				
	"		129	"	H	L	"	A	"	"	"	"	"	"	"	"	"	"	"				
	"		130	"	"	L	"	B	"	"	"	"	"	"	"	"	"	"	"				
	"		131	"	"	H	"	A	"	"	"	"	"	"	"	"	"	"	"				
	"		132	"	"	H	"	B	"	"	"	"	"	"	"	"	"	"	"				
	"		133	"	L	L	"	A	L	H	"	"	"	"	"	"	"	"	"				
	"		134	"	"	L	"	B	"	"	"	"	"	"	"	"	"	"	"				
	"		135	"	"	H	"	A	"	"	"	"	"	"	"	"	"	"	"				
	"		136	"	"	H	"	B	"	"	"	"	"	"	"	"	"	"	"				
	"		137	"	H	L	"	A	"	"	"	"	"	"	"	"	"	"	"				
	"		138	"	"	L	"	B	"	"	"	"	"	"	"	"	"	"	"				
	"		139	"	"	H	"	A	"	"	"	"	"	"	"	"	"	"	"				
	"		140	"	"	H	"	B	"	"	"	"	"	"	"	"	"	"	"				
	"		141	"	L	L	"	A	H	"	"	"	"	"	"	"	"	"	"				
	"		142	"	"	L	"	B	"	"	"	"	"	"	"	"	"	"	"				
	"		143	"	"	H	"	A	"	"	"	"	"	"	"	"	"	"	"				
	"		144	"	"	H	"	B	"	"	"	"	"	"	"	"	"	"	"				
	"		145	"	H	L	"	A	"	"	"	"	"	"	"	"	"	"	"				
	"		146	"	"	L	"	B	"	"	"	"	"	"	"	"	"	"	"				
	"		147	"	"	H	"	A	"	"	"	"	"	"	"	"	"	"	"				
	"		148	"	"	H	"	B	"	"	"	"	"	"	L	"	"	"	"				
	"		149	"	L	L	"	A	L	L	"	"	"	"	H	"	"	"	"				
	"		150	"	"	"	"	A	"	"	"	"	"	"	"	"	A	"	"				
	"		151	"	"	"	"	B	"	"	"	"	"	"	"	"	"	"	"				
	"		152	"	"	"	"	A	"	"	"	"	"	"	"	"	"	"	"				
	"		153	"	"	"	B	"	"	"	"	"	"	"	"	L	"	"	"				
	"		154	"	"	"	A	"	"	"	"	"	"	"	"	H	"	"	"				
	"		155	"	"	"	"	"	"	"	"	"	"	"	"	"	B	"	"				
	"		156	"	H	H	"	"	H	H	"	"	"	B	"	"	"	"	"				
	"		157	"	"	"	"	B	"	"	"	"	"	"	L	"	"	"	"				
	"		158	"	"	"	"	A	"	"	"	"	"	"	H	"	"	"	"				
	"		159	"	"	"	B	A	"	"	"	"	"	"	"	"	"	"	"				
	"		160	"	"	"	A	A	"	"	"	"	"	"	"	"	"	"	"				
8	Repeat subgroup 7 at T_C = +125 and T_C = -55°C.																						

See footnotes at end of device types 07 and 08.

TABLE III. Group A inspection for device types 07 and 08 – Continued.
Terminal conditions (pins not designated may be high ≥ 2.0 V; or low ≤ 0.7 V; or open).

Subgroup	Symbol	MIL-STD-883 method	Cases E, F		1	2	3	4	5	6	7	8	9	10	11	12	13	14	15	16	Measured terminal	Limits		Unit
			Case 1/ 2		2	3	4	5	7	8	9	10	12	13	14	15	17	18	19	20				
			(Device type)		B	Q_B	Q_A	Count down	Count up	Q_C	Q_D	GND	D	C	Load	Ripple carry	Borrow	Clear	A	V_{CC}		Min	Max	
			07	08																				
9 Tc = +25°C	F_{MAX} 8/	3003 9/	116	161			OUT	5.0 V	IN			GND			5.0 V			GND		5.0 V	Count up to Q_A	22		MHz
	F_{MAX} 8/	"	117	162			OUT	IN	5.0 V			"			5.0 V			GND		"	Count down to Q_A	22		MHz
	t_{PLH8}	"	118	163			OUT					"			IN			GND	5.0 V	"	Load to Q_A	3	45	ns
		"	119	164	5.0 V	OUT						"			"			"		"	Load to Q_B	"	"	"
		"	120	165						OUT		"		5.0 V	"			"		"	Load to Q_C	"	"	"
		"	121	166							OUT	"	5.0 V	"	"			"		"	Load to Q_D	"	"	"
	t_{PHL10}	"	122	167			OUT					"			"			GND	GND	"	Load to Q_A	"	"	"
		"	123	168	GND	OUT						"			"			"		"	Load to Q_B	"	"	"
		"	124	169						OUT		"		GND	"			"		"	Load to Q_C	"	"	"
		"	125	170							OUT	"	GND		"			"		"	Load to Q_D	"	"	"
	t_{PLH9}	"	126	171			OUT	5.0 V	IN			"			5.0 V			"		"	Count up to Q_A	"	43	"
		"	127	172		OUT		"	"			"			"			"		"	Count up to Q_B	"	"	"
		"	128	173				"	"	OUT		"			"			"		"	Count up to Q_C	"	"	"
		"	129	174				"	"		OUT	"			"			"		"	Count up to Q_D	"	"	"
		"	130	175				IN	5.0 V		OUT	"			"			"		"	Count down to Q_D	"	"	"
		"	131	176				"	"	OUT		"			"			"		"	Count down to Q_C	"	"	"
		"	132	177		OUT		"	"			"			"			"		"	Count down to Q_B	"	"	"
		"	133	178			OUT	"	"			"			"			"		"	Count down to Q_A	"	"	"
	t_{PHL11}	"	134	179			OUT	5.0 V	IN			"			"			"		"	Count up to Q_A	"	52	"
		"	135	180		OUT		"	"			"			"			"		"	Count up to Q_B	"	"	"
		"	136	181				"	"	OUT		"			"			"		"	Count up to Q_C	"	"	"
		"	137	182				"	"		OUT	"			"			"		"	Count up to Q_D	"	"	"
		"	138	183				IN	5.0 V		OUT	"			"			"		"	Count down to Q_D	"	"	"
		"	139	184				"	"	OUT		"			"			"		"	Count down to Q_C	"	"	"
		"	140	185		OUT		"	"			"			"			"		"	Count down to Q_B	"	"	"
		"	141	186			OUT	"	"			"			"			"		"	Count down to Q_A	"	"	"
	t_{PHL12}	"	142	187			OUT					"			10/			IN	5.0 V	"	Clear to Q_A	"	40	"
		"	143	188	5.0 V	OUT						"			"			"		"	Clear to Q_B	"	"	"
		"	144	189						OUT		"		5.0 V	"			"		"	Clear to Q_C	"	"	"
		"	145	190							OUT	"	5.0 V		"			"		"	Clear to Q_D	"	"	"

See footnotes at end of device types 07 and 08.

TABLE III. Group A inspection for device types 07 and 08 – Continued.
Terminal conditions (pins not designated may be high ≥ 2.0 V; or low ≤ 0.7 V; or open).

Subgroup	Symbol	MIL-STD-883 method	Cases E, F		1	2	3	4	5	6	7	8	9	10	11	12	13	14	15	16	Measured terminal	Limits		Unit
			Case 1/ 2		2	3	4	5	7	8	9	10	12	13	14	15	17	18	19	20				
			(Device type)		B	Q_B	Q_A	Count down	Count up	Q_C	Q_D	GND	D	C	Load	Ripple carry	Borrow	Clear	A	V_{CC}		Min	Max	
			07	08																				
9 Tc = +25°C	F_{MAX} 8/	3003 9/	146	191	Same terminal conditions as for subgroup 9.																Count up to Q_A	22		MHz
	F_{MAX} 8/	"	147	192																	Count down to Q_A	22		MHz
	t_{PLH8}	"	148	193																	Load to Q_A	3	63	ns
		"	149	194																	Load to Q_B	"	"	"
		"	150	195																	Load to Q_C	"	"	"
		"	151	196																	Load to Q_D	"	"	"
	t_{PHL10}	"	152	197																	Load to Q_A	"	"	"
		"	153	198																	Load to Q_B	"	"	"
		"	154	199																	Load to Q_C	"	"	"
		"	155	200																	Load to Q_D	"	"	"
	t_{PLH9}	"	156	201																	Count up to Q_A	"	60	"
		"	157	202																	Count up to Q_B	"	"	"
		"	158	203																	Count up to Q_C	"	"	"
		"	159	204																	Count up to Q_D	"	"	"
		"	160	205																	Count down to Q_D	"	"	"
		"	161	206																	Count down to Q_C	"	"	"
		"	162	207																	Count down to Q_B	"	"	"
		"	163	208																	Count down to Q_A	"	"	"
	t_{PHL11}	"	164	209																	Count up to Q_A	"	73	"
		"	165	210																	Count up to Q_B	"	"	"
		"	166	211																	Count up to Q_C	"	"	"
		"	167	212																	Count up to Q_D	"	"	"
		"	168	213																	Count down to Q_D	"	"	"
		"	169	214																	Count down to Q_C	"	"	"
		"	170	215																	Count down to Q_B	"	"	"
		"	171	216																	Count down to Q_A	"	"	"
	t_{PHL12}	"	172	217																	Clear to Q_A	"	56	"
		"	173	218																	Clear to Q_B	"	"	"
		"	174	219																	Clear to Q_C	"	"	"
		"	175	220																	Clear to Q_D	"	"	"
11	Same tests, terminal conditions, and limits as for subgroup 10, except T_C = -55°C.																							

See footnotes at end of device types 07 and 08.

1/ Case 2, pins not referenced are N/C.

2/ Apply 0.7 V for device type 07; apply 2.0 V for device type 08.

3/ I_{IL} limits (µA) min/max values for circuits shown:

Parameter	Terminals	Circuits						
		A	B	C	D	E	F	G
		-160/-400	-160/-400	-160/-400	-100/-340	-100/-340	-120/-360	-135/-370
I_{IL9}	A	"	"	"	"	"	"	"
	B	"	"	"	"	"	"	"
	C	"	"	"	"	"	"	"
	D	"	"	"	"	"	"	"
I_{IL10}	Load	-100/-340	"	-150/-380	-120/-360	-120/-360	"	-100/-340
I_{IL11}	Clear	-160/-400	"	-150/-380	"	"	"	-135/-370
	Count up	"	"	"	"	"	"	"
	Count down	"	"	"	"	"	"	"

4/ I_{OS} limits (mA) min/max values for circuits shown: -15/-100 for circuits A, C, D, E, F, and G and –15/-110 for circuit B.

5/ Only a summary of attributes data is required.

6/ A = 3.0 V minimum; B = 0.0 V or GND.

7/ H > 1.5 V; L < 1.5 V; X = don't care.

8/ F_{MAX} minimum limit specified is the frequency of the input pulse. The output frequency shall be one-half of the input frequency.

9/ See figure 8 for device type 07 and figure 9 for device type 08.

10/ Apply momentary GND, then 4.5 V minimum prior to input pulses. Maintain 4.5 V minimum for measurement.

TABLE III. Group A inspection for device types 09 and 13 – Continued.
Terminal conditions (pins not designated may be H ≥ 2.0 V; or L ≤ 0.7 V; or open).

Subgroup	Symbol	MIL-STD-883 method	Cases E, F	1	2	3	4	5	6	7	8	9	10	11	12	13	14	15	16	Measured terminal	Limits		Unit
			Cases 1/ 2	2	3	4	5	7	8	9	10	12	13	14	15	17	18	19	20				
			Test no.	B	Q_B	Q_A	Enable G	Down/ up	Q_C	Q_D	GND	D	C	Load	Max/ Min	Ripple carry	Clock	A	V_{CC}		Min	Max	
1 Tc = +25°C	V_{OL}	3007	1	0.7 V	4 mA						GND			0.7 V					4.5 V	Q_B		0.4	V
		"	2			4 mA					"			"				0.7 V	"	Q_A		"	"
		"	3						4 mA		"		0.7 V	"					"	Q_C		"	"
		"	4							4 mA	"	0.7 V		"					"	Q_D		"	"
		"	5	2.0 V				2.0 V			"			"	4 mA				"	Max/Min		"	"
		"	6	2/			0.7 V	0.7 V			"	2.0 V	2/	"		4 mA	0.7 V	2.0 V	"	Ripple carry		"	"
	V_{OH}	3006	7	2.0 V	-0.4 mA						"			"					"	Q_B	2.5 V		"
		"	8			-0.4 mA					"			"				2.0 V	"	Q_A	"		"
		"	9						-0.4 mA		"		2.0 V	"					"	Q_C	"		"
		"	10							-0.4 mA	"	2.0 V		"					"	Q_D	"		"
		"	11	0.7 V				2.0 V			"	0.7 V	0.7 V	"	-0.4 mA			0.7 V	"	Max/Min	"		"
		"	12				2.0 V				"			"		-0.4 mA			"	Ripple carry	"		"
	V_{IC}		13	-18 mA							"								"	B		-1.5 V	"
			14				-18 mA				"								"	Enable G		"	"
			15					-18 mA			"								"	Down/up		"	"
			16								"	-18 mA							"	D		"	"
			17								"		-18 mA						"	C		"	"
			18								"			-18 mA					"	Load		"	"
			19								"						-18 mA		"	Clock		"	"
			20								"							-18 mA	"	A		"	"
	I_{IL7}	3009	21				0.4 V	5.5 V			"								5.5 V	Enable G	3/	3/	µA
	I_{IL8}	"	22	0.4 V							"			GND					"	B	"	"	"
		"	23					0.4 V			"								"	Down/up	"	"	"
		"	24								"	0.4 V		"					"	D	"	"	"
		"	25								"		0.4 V	"					"	C	"	"	"
		"	26								"			0.4 V					"	Load	"	"	"
		"	27								"						0.4 V		"	Clock	"	"	"
		"	28								"			GND				0.4 V	"	A	"	"	"
	I_{IH15}	3010	29				2.7 V				"								"	Enable G		60	"
	I_{IH16}	"	30				5.5 V				"								"	Enable G		300	"
	I_{IH17}	"	31	2.7 V							"			5.5 V					"	B		20	"
		"	32					2.7 V			"								"	Down/up		"	"
		"	33								"	2.7 V		5.5 V					"	D		"	"
		"	34								"		2.7 V	5.5 V					"	C		"	"
		"	35								"			2.7 V					"	Load		"	"
		"	36								"						2.7 V		"	Clock		"	"
		"	37								"			5.5 V				2.7 V	"	A		"	"

See footnotes at end of device types 09 and 13.

TABLE III. Group A inspection for device types 09 and 13 – Continued.
Terminal conditions (pins not designated may be H ≥ 2.0 V; or L ≤ 0.7 V; or open).

Subgroup	Symbol	MIL-STD-883 method	Cases E, F	1	2	3	4	5	6	7	8	9	10	11	12	13	14	15	16	Measured terminal	Limits		Unit
			Cases 1/ 2	2	3	4	5	7	8	9	10	12	13	14	15	17	18	19	20		Min	Max	
			Test no.	B	Q_B	Q_A	Enable G	Down/ Up	Q_C	Q_D	GND	D	C	Load	Max/ Min	Ripple Carry	Clock	A	V_{CC}				
1 Tc = +25°C	I_{IH18}	3010	38	5.5 V							GND			5.5 V					5.5 V	B		100	µA
		"	39					5.5 V			"								"	Down/up		"	"
		"	40								"	5.5 V		5.5 V					"	D		"	"
		"	41								"		5.5 V	"					"	C		"	"
		"	42								"			"					"	Load		"	"
		"	43								"						5.5 V		"	Clock		"	"
		"	44								"			5.5 V				5.5 V	"	A		"	"
	I_{OS}	3011	45	5.5 V	GND						"			GND					"	Q_B	4/	4/	mA
		"	46			GND					"			"				5.5 V	"	Q_A	"	"	"
		"	47						GND		"		5.5 V	"					"	Q_C	"	"	"
		"	48							GND	"	5.5 V		"					"	Q_D	"	"	"
		"	49	GND				5.5 V			"	GND	GND	"	GND			GND	"	Max/Min	"	"	"
		"	50				5.5 V				"					GND			"	Ripple carry	"	"	"
	I_{CC}	3005	51	GND			GND	GND			"	GND	GND	GND			GND	GND	"	V_{CC}		35	"
2	Same tests, terminal conditions, and limits as for subgroup 1, except T_C = +125°C and V_{IC} tests are omitted.																						
3	Same tests, terminal conditions, and limits as for subgroup 1, except T_C = -55°C and V_{IC} tests are omitted.																						

See footnotes at end of device types 09 and 13.

TABLE III. Group A inspection for device types 09 – Continued.
Terminal conditions (pins not designated may be H ≥ 2.0 V; or L ≤ 0.7 V; or open).

Subgroup	Symbol	MIL-STD-883 method	Cases E, F	1	2	3	4	5	6	7	8	9	10	11	12	13	14	15	16	Measured terminal	Limits		Unit
			Cases 1/ 2	2	3	4	5	7	8	9	10	12	13	14	15	17	18	19	20		Min	Max	
			Test no.	B	Q_B	Q_A	Enable G	Down/ up	Q_C	Q_D	GND	D	C	Load	Max/Min	Ripple Carry	Clock	A	V_{CC}				
7 Tc = +25°C	Func-tional tests 5/	3014	52	A 6/	H	H	B 6/	B	H	H	GND	A	A	B	H	H	A	A	4.5 V	See 7/			
		"	53	"	"	"	A	"	"	"	"	"	"	B	"	"	"	"	"				
		"	54	"	"	"	"	"	"	"	"	"	"	A	"	"	"	"	"				
		"	55	B	"	"	"	"	"	"	"	B	B	"	"	"	B	B	"				
		"	56	B	"	"	"	"	"	"	"	"	"	"	"	"	A	"	"				
		"	57	B	"	"	B	"	"	"	"	"	"	"	"	"	A	"	"				
		"	58	A	"	"	"	"	"	"	"	A	A	"	"	L	B	A	"				
		"	59	"	L	L	"	"	L	L	"	"	"	"	L	H	A	"	"				
		"	60	"	"	L	"	"	"	"	"	"	"	"	"	"	B	"	"				
		"	61	"	"	H	"	"	"	"	"	"	"	"	"	"	A	B	"				
		"	62	"	"	H	"	"	"	"	"	"	"	"	"	"	B	"	"				
		"	63	B	H	L	"	"	"	"	"	B	B	"	"	"	A	"	"				
		"	64	A	"	L	"	"	"	"	"	A	A	"	"	"	B	A	"				
		"	65	"	"	H	"	"	"	"	"	"	A	"	"	"	A	A	"				
		"	66	"	"	H	"	"	"	"	"	"	B	"	"	"	B	B	"				
		"	67	"	L	L	"	"	H	"	"	"	"	"	"	"	A	B	"				
		"	68	"	"	L	"	"	"	"	"	B	"	"	"	"	B	A	"				
		"	69	"	"	H	"	"	"	"	"	A	A	"	"	"	A	B	"				
		"	70	"	"	H	"	"	"	"	"	"	B	"	"	"	B	B	"				
		"	71	"	H	L	"	"	"	"	"	"	A	"	"	"	A	A	"				
		"	72	"	"	L	"	"	"	"	"	B	"	"	"	"	B	B	"				
		"	73	"	"	H	"	"	"	"	"	B	"	"	"	"	A	A	"				
		"	74	B	"	H	"	"	"	"	"	A	B	"	"	"	B	B	"				
		"	75	B	L	L	"	"	L	H	"	A	B	"	"	"	A	B	"				
		"	76	A	"	L	"	"	"	"	"	B	A	"	"	"	B	A	"				
		"	77	"	"	H	"	"	"	"	"	"	"	"	"	"	A	A	"				
		"	78	"	"	H	"	"	"	"	"	"	"	"	"	"	B	B	"				
		"	79	B	H	L	"	"	"	"	"	A	B	"	"	"	A	A	"				
		"	80	"	"	L	"	"	"	"	"	"	B	"	"	"	B	"	"				
		"	81	"	"	H	"	"	"	"	"	"	A	"	"	"	A	"	"				
		"	82	"	"	H	"	"	"	"	"	"	A	"	"	"	B	B	"				
		"	83	"	L	L	"	"	H	"	"	"	B	"	"	"	A	"	"				
		"	84	"	"	L	"	"	"	"	"	B	B	"	"	"	B	"	"				
		"	85	A	"	H	"	"	"	"	"	A	A	"	"	"	A	A	"				
		"	86	B	"	H	"	"	"	"	"	B	B	"	"	"	B	B	"				
		"	87	A	H	L	"	"	"	"	"	A	A	"	"	"	A	A	"				
		"	88	B	"	L	"	"	"	"	"	B	B	"	"	"	B	"	"				
		"	89	A	"	H	"	"	"	"	"	A	A	"	H	"	A	"	"				
		"	90	B	"	H	"	"	"	"	"	B	B	"	H	L	B	B	"				
		"	91	A	L	L	"	"	L	L	"	A	A	"	L	H	A	A	"				
		"	92	B	"	"	"	A	"	"	"	B	B	"	H	"	"	B	"				
		"	93	A	"	"	A	"	"	"	"	A	A	"	"	"	"	A	"				
		"	94	B	"	"	"	"	"	"	"	B	B	"	"	"	B	B	"				
		"	95	A	"	"	"	"	"	"	"	B	A	"	"	"	A	"	"				
		"	96	B	"	"	B	"	"	"	"	A	B	"	"	"	A	"	"				
		"	97	A	"	"	"	"	"	"	"	"	B	"	"	L	B	"	"				
		"	98	A	H	H	"	"	H	H	"	"	A	"	L	H	A	A	"				
		"	99	B	"	H	"	"	"	"	"	B	B	"	"	"	B	B	"				
		"	100	B	"	L	"	"	"	"	"	B	B	"	"	"	A	B	"				
		"	101	A	"	L	"	"	"	"	"	A	A	"	"	"	B	A	"				

See footnotes at end of device types 09 and 13.

TABLE III. Group A inspection for device types 09 – Continued.
Terminal conditions (pins not designated may be H ≥ 2.0 V; or L ≤ 0.7 V; or open).

Subgroup	Symbol	MIL-STD-883 method	Cases E, F	1	2	3	4	5	6	7	8	9	10	11	12	13	14	15	16	Measured terminal	Limits		Unit
			Cases 1/ 2	2	3	4	5	7	8	9	10	12	13	14	15	17	18	19	20				
			Test no.	B	Q_B	Q_A	Enable G	Down/ up	Q_C	Q_D	GND	D	C	Load	Max/Min	Ripple Carry	Clock	A	V_{CC}		Min	Max	
7 Tc = +25°C	Func-tional tests 5/	3014	102	A 6/	L	H	B 6/	A	H	H	GND	B	A	A	L	H	A	B	4.5 V	See 7/			
		"	103	B	"	H	"	"	"	"	"	A	A	"	"	"	B	B	"				
		"	104	A	"	L	"	"	"	"	"	B	B	"	"	"	A	A	"				
		"	105	A	"	L	"	"	"	"	"	B	B	"	"	"	B	A	"				
		"	106	A	H	H	"	"	L	"	"	A	A	"	"	"	A	B	"				
		"	107	B	"	H	"	"	"	"	"	A	B	"	"	"	B	A	"				
		"	108	B	"	L	"	"	"	"	"	B	A	"	"	"	A	A	"				
		"	109	A	"	L	"	"	"	"	"	A	B	"	"	"	B	A	"				
		"	110	A	L	H	"	"	"	"	"	B	A	"	"	"	A	B	"				
		"	111	A	"	H	"	"	"	"	"	B	A	"	"	"	B	B	"				
		"	112	B	"	L	"	"	"	"	"	A	B	"	"	"	A	A	"				
		"	113	B	"	L	"	"	"	"	"	B	B	"	"	"	B	A	"				
		"	114	B	H	H	"	"	H	L	"	B	B	"	"	"	A	B	"				
		"	115	A	"	H	"	"	"	"	"	A	A	"	"	"	B	A	"				
		"	116	B	"	L	"	"	"	"	"	B	B	"	"	"	A	B	"				
		"	117	A	"	L	"	"	"	"	"	A	A	"	"	"	B	B	"				
		"	118	B	L	H	"	"	"	"	"	B	B	"	"	"	A	A	"				
		"	119	A	"	H	"	"	"	"	"	A	A	"	"	"	B	B	"				
		"	120	A	"	L	"	"	"	"	"	B	B	"	"	"	A	A	"				
		"	121	A	"	L	"	"	"	"	"	B	B	"	"	"	B	"	"				
		"	122	B	H	H	"	"	L	"	"	B	A	"	"	"	A	"	"				
		"	123	B	"	H	"	"	"	"	"	A	A	"	"	"	B	"	"				
		"	124	B	"	L	"	"	"	"	"	B	B	"	"	"	A	"	"				
		"	125	A	"	L	"	"	"	"	"	B	B	"	"	"	B	B	"				
		"	126	A	L	H	"	"	"	"	"	A	B	"	"	"	A	A	"				
		"	127	A	"	H	"	"	"	"	"	A	A	"	"	"	B	A	"				
		"	128	B	"	L	"	"	"	"	"	B	B	"	H	"	A	B	"				
		"	129	A	"	L	"	"	"	"	"	A	A	"	H	L	B	A	"				
		"	130	B	H	H	"	"	H	H	"	B	B	"	L	H	A	B	"				
		"	131	A	"	"	"	"	"	"	"	A	A	B	L	H	A	A	"				
		"	132	"	"	"	"	B	"	"	"	"	"	"	H	L	B	"	"				
		"	133	"	"	"	"	"	"	"	"	"	"	"	"	H	A	"	"				
		"	134	"	"	"	A	"	"	"	"	"	"	"	"	"	B	"	"				
		"	135	B	L	L	"	"	L	L	"	B	B	"	L	"	"	B	"				
		"	136	B	L	H	"	"	H	L	"	B	A	"	"	"	"	A	"				
		"	137	A	H	L	"	"	L	H	"	A	B	"	"	"	"	B	"				
		"	138	B	L	H	"	A	H	L	"	B	A	"	"	"	"	A	"				
		"	139	A	H	L	B	"	L	H	"	A	B	"	"	"	"	B	"				
		"	140	B	L	H	"	"	H	L	"	B	A	"	"	"	"	A	"				
		"	141	A	H	L	"	"	L	H	"	A	B	"	"	"	A	B	"				
		"	142	A	"	"	"	"	"	"	"	A	B	A	"	"	"	B	"				
		"	143	B	"	"	"	"	"	"	"	B	A	"	"	"	"	A	"				
		"	144	"	"	"	"	B	"	"	"	"	"	"	"	"	"	"	"				
		"	145	"	"	"	A	"	"	"	"	"	"	"	"	"	"	"	"				
		"	146	"	"	"	B	"	"	"	"	"	"	"	"	"	"	"	"				
		"	147	"	"	"	"	A	"	"	"	"	"	"	"	"	"	"	"				
		"	148	"	"	"	"	"	"	"	"	"	"	"	"	"	"	B	"				
		"	149	A	"	"	"	"	"	"	"	"	"	"	"	"	"	A	"				
		"	150	"	"	"	"	"	H	L	"	"	"	B	"	"	B	B	"				
		"	151	"	"	"	"	"	H	L	"	"	"	A	"	"	B	B	"				
8	Repeat subgroup 7 at T_C = +125 and T_C = -55°C.																						

See footnotes at end of device types 09 and 13.

TABLE III. Group A inspection for device types 13 – Continued.
Terminal conditions (pins not designated may be H ≥ 2.0 V; or L ≤ 0.7 V; or open).

Subgroup	Symbol	MIL-STD-883 method	Cases E, F	1	2	3	4	5	6	7	8	9	10	11	12	13	14	15	16	Measured terminal	Limits		Unit
			Cases 1/ 2	2	3	4	5	7	8	9	10	12	13	14	15	17	18	19	20		Min	Max	
			Test no.	B	Q_B	Q_A	Enable G	Down/ up	Q_C	Q_D	GND	D	C	Load	Max/Min	Ripple carry	Clock	A	V_{CC}				
7 Tc = +25°C	Func-tional tests 5/	3014	52	B 6/	L	H	A 6/	B	L	H	GND	A	B	B 6/	H	H	B	A	4.5 V	See 7/			
	"		53	"	"	"	"	"	"	"	"	"	"	A	"	"	B	"	"				
	"		54	"	"	"	"	"	"	"	"	"	"	"	"	"	A	"	"				
	"		55	"	"	"	B	"	"	"	"	"	"	"	"	"	A	"	"				
	"		56	"	"	"	"	"	"	"	"	"	"	"	"	L	B	"	"				
	"		57	"	"	L	"	"	"	L	"	"	"	"	L	H	A	"	"				
	"		58	A	"	L	"	"	"	"	"	"	A	"	"	"	B	"	"				
	"		59	A	"	H	"	"	"	"	"	"	"	"	"	"	A	"	"				
	"		60	B	"	H	"	"	"	"	"	"	"	"	"	"	B	B	"				
	"		61	B	H	L	"	"	"	"	"	B	B	"	"	"	A	B	"				
	"		62	A	"	L	"	"	"	"	"	A	A	"	"	"	B	A	"				
	"		63	B	"	H	"	"	"	"	"	"	B	"	"	"	A	"	"				
	"		64	"	"	H	"	"	"	"	"	"	B	"	"	"	B	"	"				
	"		65	"	L	L	"	"	H	"	"	"	A	"	"	"	A	B	"				
	"		66	A	"	L	"	"	"	"	"	"	A	"	"	"	B	"	"				
	"		67	B	"	H	"	"	"	"	"	B	B	"	"	"	A	"	"				
	"		68	A	"	H	"	"	"	"	"	"	A	"	"	"	B	"	"				
	"		69	"	H	L	"	"	"	"	"	"	B	"	"	"	A	"	"				
	"		70	"	"	L	"	"	"	"	"	"	B	"	"	"	B	"	"				
	"		71	"	"	H	"	"	"	"	"	A	A	"	"	"	A	A	"				
	"		72	B	"	H	"	"	"	"	"	B	B	"	"	"	B	B	"				
	"		73	A	L	L	"	"	L	H	"	A	A	"	"	"	A	A	"				
	"		74	A	"	L	"	"	"	"	"	A	A	"	"	"	B	A	"				
	"		75	B	"	H	"	"	"	"	"	B	B	"	H	"	A	B	"				
	"		76	B	"	H	"	"	"	"	"	"	"	"	H	L	B	"	"				
	"		77	B	"	L	"	"	"	L	"	"	"	"	L	H	A	"	"				
	"		78	A	"	L	"	"	"	"	"	A	A	"	"	"	B	A	"				
	"		79	B	"	H	"	"	"	"	"	A	B	"	"	"	A	A	"				
	"		80	A	"	"	A	A	"	"	"	B	A	"	"	"	B	B	"				
	"		81	A	"	"	"	"	"	"	"	B	A	"	"	"	A	B	"				
	"		82	B	"	"	"	"	"	"	"	A	B	"	"	"	B	A	"				
	"		83	"	"	"	"	"	"	"	"	"	B	"	"	"	A	A	"				
	"		84	"	"	"	B	"	"	"	"	"	A	"	"	"	B	B	"				
	"		85	"	"	L	"	"	"	"	"	"	A	"	H	"	A	"	"				
	"		86	"	"	L	"	"	"	"	"	B	B	"	H	L	B	"	"				
	"		87	A	"	H	"	"	"	H	"	"	"	"	L	H	A	A	"				
	"		88	"	"	H	"	"	"	"	"	"	"	"	L	H	B	"	"				
	"		89	"	"	L	"	"	"	"	"	"	"	"	"	"	A	"	"				
	"		90	"	"	L	"	"	"	"	"	A	A	"	"	"	B	"	"				
	"		91	"	H	H	"	"	H	L	"	"	"	"	"	"	A	"	"				
	"		92	"	"	H	"	"	"	"	"	"	"	"	"	"	B	B	"				
	"		93	"	"	L	"	"	"	"	"	"	"	"	"	"	A	"	"				
	"		94	"	"	L	"	"	"	"	"	B	B	"	"	"	B	"	"				
	"		95	"	L	H	"	"	"	"	"	"	B	"	"	"	A	"	"				
	"		96	B	"	H	"	"	"	"	"	"	A	"	"	"	B	A	"				
	"		97	B	"	L	"	"	"	"	"	"	"	"	"	"	A	B	"				
	"		98	A	"	L	"	"	"	"	"	A	"	"	"	"	B	B	"				
	"		99	"	H	H	"	"	L	"	"	"	"	"	"	"	A	A	"				
	"		100	"	"	H	"	"	"	"	"	"	"	"	"	"	B	"	"				
	"		101	"	"	L	"	"	"	"	"	"	"	"	"	"	A	"	"				

See footnotes at end of device types 09 and 13.

TABLE III. Group A inspection for device types 13 – Continued.
Terminal conditions (pins not designated may be H ≥ 2.0 V; or L ≤ 0.7 V; or open).

Subgroup	Symbol	MIL-STD-883 method	Cases E, F	1	2	3	4	5	6	7	8	9	10	11	12	13	14	15	16	Measured terminal	Limits		Unit
			Cases 1/ 2	2	3	4	5	7	8	9	10	12	13	14	15	17	18	19	20		Min	Max	
			Test no.	B	Q_B	Q_A	Enable G	Down/ up	Q_C	Q_D	GND	D	C	Load	Max/Min	Ripple Carry	Clock	A	V_{CC}				
7 Tc = +25°C	Func-tional tests 5/	3014	102	B 6/	H	L	B 6/	A 6/	L	L	GND	B	B 6/	A	L	H	B	B	4.5 V	See 7/			
	"		103	"	L	H	"	"	"	"	"	"	"	"	"	"	A	B	"				
	"		104	"	"	H	"	"	"	"	"	"	"	"	"	"	B	A	"				
	"		105	"	"	L	"	"	"	"	"	"	"	"	H	"	A	A	"				
	"		106	A	"	L	A	"	"	"	"	A	A	"	"	"	A	B	"				
	"		107	A	"	"	"	"	"	"	"	A	A	"	"	"	B	"	"				
	"		108	B	"	"	"	"	"	"	"	B	B	"	"	"	A	"	"				
	"		109	"	"	"	B	"	"	"	"	"	"	"	"	"	A	"	"				
	"		110	"	"	"	"	"	"	"	"	"	"	"	"	L	B	"	"				
	"		111	A	"	H	"	"	"	H	"	A	A	"	L	H	A	A	"				
	"		112	"	"	H	"	"	"	"	"	"	"	"	"	"	B	B	"				
	"		113	"	"	L	"	"	"	"	"	"	"	"	"	"	A	A	"				
	"		114	B	"	H	"	"	"	"	"	"	B	B	"	"	"	"	"				
	"		115	"	"	"	"	"	"	"	"	"	"	A	"	"	"	"	"				
	"		116	"	"	"	"	"	"	"	"	B	"	"	"	"	"	B	"				
	"		117	"	"	"	A	"	"	"	"	"	"	"	"	"	"	"	"				
	"		118	"	"	"	"	"	"	"	"	"	"	"	"	"	B	"	"				
	"		119	"	"	"	"	"	"	"	"	"	"	"	"	"	A	"	"				
	"		120	"	"	"	"	B	"	"	"	"	"	"	H	"	A	"	"				
	"		121	"	"	"	"	"	"	"	"	"	"	"	"	"	B	"	"				
	"		122	"	"	"	"	"	"	"	"	"	"	"	"	"	A	"	"				
	"		123	A	"	"	B	"	"	"	"	A	A	"	"	"	A	A	"				
	"		124	"	"	"	"	"	"	"	"	"	"	"	"	L	B	"	"				
	"		125	"	"	L	"	"	L	L	"	"	"	"	L	H	A	"	"				
	"		126	B	"	H	"	"	H	"	"	B	"	B	"	"	A	"	"				
	"		127	"	"	"	"	"	"	"	"	"	"	"	"	"	B	"	"				
	"		128	"	"	"	"	"	"	"	"	"	"	"	"	"	A	"	"				
	"		129	"	"	"	"	"	"	"	"	"	"	A	"	"	"	"	"				
	"		130	A	"	"	"	"	"	"	"	A	B	"	"	"	"	B	"				
	"		131	A	"	"	"	"	"	"	"	"	"	"	"	"	B	"	"				
	"		132	B	"	L	"	"	L	H	"	"	"	B	"	"	B	"	"				
	"		133	"	"	"	"	"	"	"	"	"	"	B	"	"	A	"	"				
	"		134	"	"	"	A	A	"	"	"	"	"	A	"	"	A	"	"				
	"		135	"	"	"	"	"	"	"	"	B	A	"	"	"	B	A	"				
	"		136	"	"	"	"	"	"	"	"	B	A	"	"	"	A	"	"				
	"		137	"	"	H	"	"	"	"	"	A	B	B	"	"	"	"	"				
	"		138	A	H	L	"	"	H	L	"	B	A	"	"	"	"	B	"				
	"		139	A	H	H	"	"	H	"	"	"	A	"	"	"	"	A	"				
	"		140	B	L	L	"	B	L	"	"	"	B	"	"	"	"	B	"				
	"		141	B	"	"	B	"	"	"	"	"	B	A	"	"	"	B	"				
	"		142	A	"	"	"	"	"	"	"	A	A	"	"	"	"	A	"				
	"		143	"	"	"	"	A	"	"	"	"	"	"	H	"	"	"	"				
	"		144	"	"	"	"	"	"	"	"	"	"	"	H	L	B	"	"				
	"		145	"	"	H	"	"	"	H	"	B	"	"	L	H	A	B	"				
	"		146	"	"	"	"	B	"	"	"	B	"	"	H	H	A	B	"				
	"		147	"	"	"	"	"	"	"	"	A	"	"	H	L	B	A	"				
	"		148	"	"	L	"	"	"	L	"	"	"	"	L	H	A	"	"				
	"		149	"	H	H	"	"	H	H	"	"	"	B	H	H	A	"	"				
8	Repeat subgroup 7 at T_C = +125 and T_C = -55°C.																						

See footnotes at end of device types 09 and 13.

TABLE III. Group A inspection for device types 09 and 13 – Continued.
Terminal conditions (pins not designated may be H ≥ 2.0 V; or L ≤ 0.7 V; or open).

Subgroup	Symbol	MIL-STD-883 method	Cases E, F		1	2	3	4	5	6	7	8	9	10	11	12	13	14	15	16	Measured terminal	Limits		Unit
			Case 1/ 2		2	3	4	5	7	8	9	10	12	13	14	15	17	18	19	20		Min	Max	
			(Device type)		B	Q_B	Q_A	Enable G	Down/ up	Q_C	Q_D	GND	D	C	Load	Max/Min	Ripple carry	Clock	A	V_{CC}				
			09	13																				
9 Tc = +25°C	F_{MAX} 8/	3003 9/	152	150			OUT	GND	GND			GND			5.0 V			IN		5.0 V	Ck to Q_A	18		MHz
	t_{PLH10}	"	153	151			OUT					"			IN			GND	5.0 V	"	Load to Q_A	3	38	ns
		"	154	152	5.0 V	OUT						"			"			"		"	Load to Q_B	"	"	"
		"	155	153						OUT		"		5.0 V	"			"		"	Load to Q_C	"	"	"
		"	156	154							OUT	"	5.0 V		"			"		"	Load to Q_D	"	"	"
	t_{PHL13}	"	157	155			OUT					"			"			"	GND	"	Load to Q_A	"	55	"
		"	158	156	GND	OUT						"			"			"		"	Load to Q_B	"	"	"
		"	159	157						OUT		"		GND	"			"		"	Load to Q_C	"	"	"
		"	160	158							OUT	"	GND		"			"		"	Load to Q_D	"	"	"
	t_{PLH11}	"	161	159			OUT	GND	GND			"			5.0 V			IN		"	Ck to Q_A	"	29	"
		"	162	160		OUT		"	"			"			"			"		"	Ck to Q_B	"	"	"
		"	163	161				"	"	OUT		"			"			"		"	Ck to Q_C	"	"	"
		"	164	162				"	"		OUT	"			"			"		"	Ck to Q_D	"	"	"
	t_{PHL14}	"	165	163			OUT	"	"			"			"			"		"	Ck to Q_A	"	41	"
		"	166	164		OUT		"	"			"			"			"		"	Ck to Q_B	"	"	"
		"	167	165				"	"	OUT		"			"			"		"	Ck to Q_C	"	"	"
		"	168	166				"	"		OUT	"			"			"		"	Ck to Q_D	"	"	"
	t_{PLH12}	"	169	167				"	"			"			"	OUT		"		"	Ck to Max/Min	"	47	"
	t_{PHL15}	"	170	168				"	"			"			"	OUT		"		"	Ck to Max/Min	"	57	"

See footnotes at end of device types 09 and 13.

TABLE III. Group A inspection for device types 09 and 13 – Continued.
Terminal conditions (pins not designated may be H ≥ 2.0 V; or L ≤ 0.7 V; or open).

Subgroup	Symbol	MIL-STD-883 method	Cases E, F		1	2	3	4	5	6	7	8	9	10	11	12	13	14	15	16	Measured terminal	Limits		Unit
			Case 1/ 2		2	3	4	5	7	8	9	10	12	13	14	15	17	18	19	20		Min	Max	
			(Device type)		B	Q_B	Q_A	Enable G	Down/ up	Q_C	Q_D	GND	D	C	Load	Max/Min	Ripple carry	Clock	A	V_{CC}				
			09	13																				
10 Tc = +125°C	F_{MAX} 8/	3003 9/	171	169	Same terminal conditions as for subgroup 9.																Ck to Q_A	18		MHz
	t_{PLH10}	"	172	170																	Load to Q_A	3	53	ns
		"	173	171																	Load to Q_B	"	"	"
		"	174	172																	Load to Q_C	"	"	"
		"	175	173																	Load to Q_D	"	"	"
	t_{PHL13}	"	176	174																	Load to Q_A	"	77	"
		"	177	175																	Load to Q_B	"	"	"
		"	178	176																	Load to Q_C	"	"	"
		"	179	177																	Load to Q_D	"	"	"
	t_{PLH11}	"	180	178																	Ck to Q_A	"	41	"
		"	181	179																	Ck to Q_B	"	"	"
		"	182	180																	Ck to Q_C	"	"	"
		"	183	181																	Ck to Q_D	"	"	"
	t_{PHL14}	"	184	182																	Ck to Q_A	"	57	"
		"	185	183																	Ck to Q_B	"	"	"
		"	186	184																	Ck to Q_C	"	"	"
		"	187	185																	Ck to Q_D	"	"	"
	t_{PLH12}	"	188	186																	Ck to Max/Min	"	66	"
	t_{PHL15}	"	189	187																	Count up to Q_B	"	80	"
11	Same tests, terminal conditions, and limits as for subgroup 10, except T_C = -55°C.																							

See footnotes at end of device types 09 and 13.

1/ Case 2, pins not referenced are N/C.

2/ Apply 2.0 for device type 09; apply 0.7 V for device type 13.

3/ I_{IL} limits (μA) min/max values for circuits shown:

Parameter	Terminals	Circuits						
		A	B	C	D	E	F	G
I_{IL7}	Enable G	-360/-1080	-160/-400	-360/-1080	-360/-1080	-360/-1080	-360/-1080	-360/-1080
I_{IL8}	A, B, C, D	-130/-400	-160/-400	-160/-400	-160/-400	-120/-360	-120/-360	-120/-360
	Down/up	"	"	-150/-380	"	"	"	"
	Clock	"	"	"	"	"	"	"
	Load	-100/-340	"	"	-100/-340	"	"	"

4/ I_{OS} limits (mA) min/max values for circuits shown: -15/-100 for circuits A, C, D, E, F, and G and –15/-110 for circuit B.

5/ Only a summary of attributes data is required.

6/ A = 3.0 V minimum; B = 0.0 V or GND.

7/ H > 1.5 V; L < 1.5 V; X = don't care.

8/ F_{MAX} minimum limit specified is the frequency of the input pulse. The output frequency shall be one-half of the input frequency.

9/ See figure 10 for device type 09 and figure 12 for device type 13.

TABLE III. Group A inspection for device types 10.

Terminal conditions (pins not designated may be H ≥ 2.0 V; or L ≤ 0.7 V; or open).

Subgroup	Symbol	MIL-STD-883 method	Cases A, B, C, D	1	2	3	4	5	6	7	8	9	10	11	12	13	14	Measured terminal	Limits		Unit
			Cases 1/ 2	2	3	4	6	8	9	10	12	13	14	16	18	19	20		Min	Max	
			Test no.	B	NC	NC	NC	V_{CC}	$R_O(1)$	$R_O(2)$	Q_D	Q_C	GND	Q_B	Q_A	NC	A				
1 Tc = +25°C	V_{OL}	3007	1	GND				4.5 V	2.0 V	2.0 V			GND		4 mA		2.0 V	Q_A		0.4	V
		"	2	2.0 V				"	"	"			"	4 mA	$+I_{IL3}$ (max)		GND	Q_B		"	"
		"	3	"				"	"	"			"				"	Q_C		"	"
		"	4	"				"	"	"	4 mA		"				"	Q_D		"	"
	V_{OH}	3006	5	GND				"	2/	2/			"		-0.4 mA		2/ 3/	Q_A	2.5		"
		"	6	2/ 3/				"	"	"			"	-0.4 mA			GND	Q_B	"		"
		"	7	2/ 4/				"	"	"		-0.4 mA	"				"	Q_C	"		"
		"	8	2/ 5/				"	"	"	-0.4 mA		"				"	Q_D	"		"
	V_{IC}		9					"					"				-18 mA	A		-1.5	"
			10	-18 mA				"					"					B		"	"
			11					"	-18 mA				"					$R_O(1)$		"	"
			12					"		-18 mA			"					$R_O(2)$		"	"
	I_{IL1}	3009	13					5.5 V	0.4 V	5.5 V			"					$R_O(1)$	6/	6/	mA
		"	14					"	5.5 V	0.4 V			"					$R_O(2)$	"	"	"
	I_{IL2}	"	15					"	2/	2/			"				0.4 V	A	"	"	"
	I_{IL3}	"	16	0.4 V				"	"	"			"					B	"	"	"
	I_{IH1}	3010	17					"	2.7 V	GND			"					$R_O(1)$		20	µA
	I_{IH1}	"	18					"	GND	2.7 V			"					$R_O(2)$		20	"
	I_{IH2}	"	19					"	5.5 V	GND			"					$R_O(1)$		100	"
	I_{IH2}	"	20					"	GND	5.5 V			"					$R_O(2)$		100	"
	I_{IH3}	"	21					"	5.5 V	5.5 V			"				2.7 V	A		80	"
	I_{IH4}	"	22					"	"	"			"				5.5 V	A		400	"
	I_{IH5}	"	23	2.7 V				"	"	"			"					B	13/	80	"
	I_{IH6}	"	24	5.5 V				"	"	"			"					B		400	"
	I_{OS}	3011	25	GND				"	2/	2/			"		GND		2/ 3/	Q_A	7/	7/	mA
		"	26	2/ 3/				"	"	"			"	GND			GND	Q_B	"	"	"
		"	27	2/ 4/				"	"	"		GND	"				"	Q_C	"	"	"
		"	28	2/ 5/				"	"	"	GND		"				"	Q_D	"	"	"
	I_{CC}	3005	29	GND				"					"					V_{CC}		15	"
2	Same tests, terminal conditions, and limits as for subgroup 1, except T_C = +125°C and V_{IC} tests are omitted.																				
3	Same tests, terminal conditions, and limits as for subgroup 1, except T_C = -55°C and V_{IC} tests are omitted.																				

See footnotes at end of device type 10.

TABLE III. Group A inspection for device type 10– Continued.
Terminal conditions (pins not designated may be high ≥ 2.0 V; or low ≤ 0.7 V; or open).

Subgroup	Symbol	MIL-STD-883 method	Cases E A, B, C, D	1	2	3	4	5	6	7	8	9	10	11	12	13	14	Measured terminal	Limits		Unit
			Cases1/ 2	2	3	4	6	8	9	10	12	13	14	16	18	19	20		Min	Max	
			Test no.	B	NC	NC	NC	V_{CC}	$R_O(1)$	$R_O(2)$	Q_D	Q_C	GND	Q_B	Q_A	NC	A				
7 Tc = +25°C	Func-Tional tests 8/	3014	30	B 9/				4.5 V	A 9/	A 9/	L	L	GND	L	L		B 9/	See 10/			
		"	31	A				"	"	"	"	"	"	"	"		"				
		"	32	B				"	"	"	"	"	"	"	"		"				
		"	33	B				"	B	"	"	"	"	"	"		"				
		"	34	A				"	"	"	"	"	"	"	"		"				
		"	35	B				"	"	"	"	"	"	H	"		"				
		"	36	B				"	A	"	"	"	"	L	"		"				
		"	37	B				"	"	X	"	"	"	"	"		"				
		"	38	A				"	"	B	"	"	"	"	"		"				
		"	39	B				"	"	"	"	"	"	H	"		"				
		"	40	A				"	"	"	"	"	"	H	"		"				
		"	41	B				"	"	"	"	H	"	L	"		"				
		"	42	A				"	"	"	"	H	"	"	"		"				
		"	43	B				"	"	"	H	L	"	"	"		"				
		"	44	A				"	"	"	"	"	"	"	"		"				
		"	45	B				"	"	"	"	"	"	H	"		"				
		"	46	A				"	"	"	"	"	"	H	"		"				
		"	47	B				"	"	"	"	H	"	L	"		"				
		"	48	B				"	"	A	L	L	"	"	"		"				
		"	49	B				"	B	"	"	"	"	"	"		"				
		"	50	A				"	"	"	"	"	"	"	"		"				
		"	51	B				"	"	"	"	"	"	H	"		"				
		"	52	A				"	"	"	"	"	"	H	"		"				
		"	53	B				"	"	"	"	H	"	L	"		"				
		"	54	A				"	"	"	"	H	"	"	"		"				
		"	55	B				"	"	"	H	L	"	"	"		"				
		"	56	A				"	"	"	"	"	"	"	"		"				
		"	57	B				"	"	"	"	"	"	H	"		"				
		"	58	A				"	"	"	"	"	"	H	"		"				
		"	59	B				"	"	"	"	H	"	L	"		"				
		"	60	A				"	"	"	"	H	"	"	"		"				
		"	61	B				"	"	"	L	L	"	"	"		"				
		"	62	"				"	"	"	"	"	"	"	"		A				
		"	63	"				"	"	"	"	"	"	"	H		B				
		"	64	"				"	"	"	"	"	"	"	H		A				
		"	65	"				"	"	"	"	"	"	"	L		B				
8	Same tests, terminal conditions, and limits as for subgroup 7, except T_C = +125°C and -55°C.																				
9 Tc = +25°C	F_{MAX}	3003	66					5.0 V	GND				GND		OUT		IN 12/	A to Q_A	29		MHz
	t_{PLH1}	(Fig 11)	67					"	11/	A 9/		OUT	"				IN	A to Q_C	3	53	ns
	t_{PHL1}	"	68					"	GND			OUT	"				IN	A to Q_C	"	58	"
	t_{PLH2}	"	69	IN				"	11/	A 9/	OUT		"					B to Q_D	"	37	"
	t_{PHL2}	"	70	IN				"	GND		OUT		"					B to Q_D	"	50	"
10 Tc = +125°C	F_{MAX}	"	71					"	GND				"		OUT		IN 12/	A to Q_A	29		MHz
	t_{PLH1}	"	72					"	11/	A 9/		OUT	"				IN	A to Q_C	3	74	ns
	t_{PHL1}	"	73					"	GND			OUT	"				IN	A to Q_C	"	81	"
	t_{PLH2}	"	74	IN				"	11/	A 9/	OUT		"					B to Q_D	"	52	"
	t_{PHL2}	"	75	IN				"	GND		OUT		"					B to Q_D	"	56	"
11	Same tests, terminal conditions, and limits as for subgroup 10, except T_C = -55°C.																				

See footnotes at end of device type 10.

1/ Case 2, pins not referenced are N/C.

2/ Apply 4.5 volts pulse, then ground prior to taking measurements to set device in the desired state. Maintain ground for measurement.

3/ Input pulse must be applied one time after R_O pulse.

4/ Input pulse must be applied twice after R_O pulse.

5/ Input pulse must be applied four times after R_O pulse.

6/ I_{IL} limits (mA) min/max values for circuits shown:

Parameter	Terminals	Circuits						
		A	B	C	D	E	F	G
I_{IL1}	$R_O(1)$ $R_O(2)$	-.12/-.36 “	-.03/-.40 “	-.03/-.40 “	-.03/-.40 “		-.12/-.36 “	
I_{IL2}	A	-0.5/-2.0	-1.0/-2.4	-1.0/-2.4	-1.0/-2.4		-0.5/-2.0	
I_{IL3}	B	-0.7/-3.2	-0.7/-3.2	-0.7/-3.2	-0.4/-1.6		-0.7/-3.2	

7/ I_{OS} limits (mA) min/max values for circuits shown:

Parameter	Measured terminals	Circuits						
		A	B	C	D	E	F	G
I_{OS}	Q_A, Q_B, Q_C, Q_D	-15/-100	-15/-100	-30/-130	-15/-100		-15/-100	

8/ Only a summary of attributes data is required.

9/ A = 3.0 V minimum; B = 0.0 V or GND.

10/ H > 1.5 V; L < 1.5 V; X = don’t care.

11/ Momentary 3.0 V (min), then ground. Maintain ground for measurement.

12/ F_{MAX} min limit specified is the frequency of the input pulse. The output frequency shall be one-half of the input frequency.

13/ The minimum limit for circuit F shall be –150 µA.

5. PACKAGING

5.1 Packaging requirements. For acquisition purposes, the packaging requirements shall be as specified in the contract or order (see 6.2). When actual packaging of materiel is to be performed by DoD or in-house contractor personnel, these personnel need to contact the responsible packaging activity to ascertain packaging requirements. Packaging requirements are maintained by the Inventory Control Point's packaging activity within the Military Service or Defense Agency, or within the military service's system command. Packaging data retrieval is available from the managing Military Department's or Defense Agency's automated packaging files, CD-ROM products, or by contacting the responsible packaging activity.

6. NOTES

(This section contains information of a general or explanatory nature which may be helpful, but is not mandatory.)

6.1 Intended use. Microcircuits conforming to this specification are intended for original equipment design applications and logistic support of existing equipment.

6.2 Acquisition requirements. Acquisition documents should specify the following:

a. Title, number, and date of the specification.

b. PIN and compliance identifier, if applicable (see 1.2).

c. Requirements for delivery of one copy of the conformance inspection data pertinent to the device inspection lot to be supplied with each shipment by the device manufacturer, if applicable.

d. Requirements for certificate of compliance, if applicable.

e. Requirements for notification of change of product or process to contracting activity in addition to notification to the qualifying activity, if applicable.

f. Requirements for failure analysis (including required test condition of method 5003 of MIL-STD-883), corrective action, and reporting of results, if applicable.

g. Requirements for product assurance options.

h. Requirements for special carriers, lead lengths, or lead forming, if applicable. These requirements shall not affect the part number. Unless otherwise specified, these requirements will not apply to direct purchase by or direct shipment to the Government.

I Requirements for "JAN" marking.

j. Packaging Requirements (see 5.1)

6.3 Superseding information. The requirements of MIL-M-38510 have been superseded to take advantage of the available Qualified Manufacturer Listing (QML) system provided by MIL-PRF-38535. Previous references to MIL-M-38510 in this document have been replaced by appropriate references to MIL-PRF-38535. All technical requirements now consist of this specification and MIL-PRF-38535. The MIL-M-38510 specification sheet number and PIN have been retained to avoid adversely impacting existing government logistics systems and contractor's parts lists.

6.4 Qualification. With respect to products requiring qualification, awards will be made only for products which are, at the time of award of contract, qualified for inclusion in Qualified Manufacturers List QML-38535 whether or not such products have actually been so listed by that date. The attention of the contractors is called to these requirements, and manufacturers are urged to arrange to have the products that they propose to offer to the Federal Government tested for qualification in order that they may be eligible to be awarded contracts or purchase orders for the products covered by this specification. Information pertaining to qualification of products may be obtained from DSCC-VQ, 3990 E. Broad Street, Columbus, Ohio 43123-1199.

6.5 Abbreviations, symbols, and definitions. The abbreviations, symbols, and definitions used herein are defined in MIL-PRF-38535, MIL-HDBK-1331, and as follows:

GND ..... Ground zero voltage potential
I_{IN} ..... Current flowing into an input terminal
V_{IC} ..... Input clamp voltage
V_{IN} ..... Voltage level at an input terminal

6.6 Logistic support. Lead materials and finishes (see 3.4) are interchangeable. Unless otherwise specified, microcircuits acquired for Government logistic support will be acquired to device class B (see 1.2.2), lead material and finish A (see 3.4). Longer length leads and lead forming should not affect the part number.

6.7 Substitutability. The cross-reference information below is presented for the convenience of users. Microcircuits covered by this specification will functionally replace the listed generic-industry type. Generic-industry microcircuit types may not have equivalent operational performance characteristics across military temperature ranges or reliability factors equivalent to MIL-M-38510 device types and may have slight physical variations in relation to case size. The presence of this information should not be deemed as permitting substitution of generic-industry types for MIL-M-38510 types or as a waiver of any of the provisions of MIL-PRF-38535.

Military device type	Generic-industry type
01	54LS90
02	54LS93
03	54LS160
04	54LS161
05	54LS168
06	54LS169
07	54LS192
08	54LS193
09	54LS191
10	54LS92
11	54LS162
12	54LS163
13	54LS190

6.8 Manufacturers' designation. Manufacturers' circuits which form a part of this specification are designated with an "X" as shown in table IV herein.

TABLE IV. Manufacturers' designation.

Device type	Circuit	A	B	G	C	E	F	D
	Manufacturer	Texas Instruments, Incorporated	Signetics Corp.	National Semi-Conductor Corp.	Raytheon Company	Fairchild Semi-conductor	Motorola, Inc.	Advanced Micro Devices Inc.
	Commercial Type							
01	54LS90	X	X		X	X	X	
02	54LS93	X	X	X	X	X	X	
03	54LS160A	X	X	X	X	X	X	X
04	54LS161A	X	X	X	X	X	X	X
05	54LS168			X		X		
06	54LS169A			X		X		
07	54LS192	X	X	X	X	X	X	X
08	54LS193	X	X	X	X	X	X	X
09	54LS191	X	X	X	X	X	X	X
10	54LS92	X		X	X		X	
11	54LS162A	X	X	X	X	X	X	X
12	54LS163A	X	X	X	X	X	X	X
13	54LS190	X	X	X	X	X	X	X

6.9 Change from previous issue. Asterisks are not used in this revision to identify changes with respect to the previous issue, due to the extensiveness of the changes.

Custodians:
Army - CR
Navy - EC
Air Force - 11
DLA - CC

Preparing activity:
DLA - CC

Review activities:
Army – SM, MI
Navy - AS, CG, MC, SH TD
Air Force – 03, 19, 99

(Project 5962-1996)