CC2564C Dual-Mode *Bluetooth*® Controller

1 Device Overview

1.1 Features

- TI's Single-Chip *Bluetooth*® Solution With Bluetooth Basic Rate (BR), Enhanced Data Rate (EDR), and Low Energy (LE) Support
- Bluetooth 5.1 Delaration ID D049226
- Highly Optimized for Size-Constrained and Low-Cost Designs:
  - Single-Ended 50-Ω RF Interface
  - VQFNP-MR Package Family, RVM Footprint: 76 Terminals, 0.6-mm Pitch, 8-mm × 8-mm
- BR and EDR Features Include:
  - Up to Seven Active Devices
  - Scatternet: Up to Three Piconets Simultaneously, One as Master and Two as Slaves
  - Up to Two Synchronous Connection Oriented (SCO) Links on the Same Piconet
  - Support for All Voice Air-Coding—Continuously Variable Slope Delta (CVSD), A-Law, µ-Law, Modified Subband Coding (mSBC), and Transparent (Uncoded)
  - Provide an Assisted Mode for HFP 1.6 Wideband Speech (WBS) Profile or A2DP Profile to Reduce Host Processing and Power
  - Support of Multiple Bluetooth Profiles With Enhanced QoS
- Low Energy Features Include:
  - Multiple Sniff Instances Tightly Coupled to Achieve Minimum Power Consumption
  - Independent Buffering for Low Energy Allows Large Numbers of Multiple Connections Without Affecting BR or EDR Performance
  - Built-In Coexistence and Prioritization Handling for BR, EDR, and Low Energy
  - Capabilities of Link Layer Topology Scatternet—Can Act Concurrently as Peripheral and Central
  - Network Support for up to 10 Devices
  - Time Line Optimization Algorithms to Achieve Maximum Channel Utliization
- Best-in-Class Bluetooth (RF) Performance (TX Power, RX Sensitivity, Blocking)
  - Class 1 TX Power up to +12 dBm
  - Internal Temperature Detection and Compensation to Ensure Minimal Variation in RF Performance Over Temperature, No External Calibration Required
  - Improved Adaptive Frequency Hopping (AFH) Algorithm With Minimum Adaptation Time
  - Longer Range, Including Twice the Range of Other Low-Energy-Only Solutions
- Advanced Power Management for Extended Battery Life and Ease of Design
  - On-Chip Power Management, Including Direct Connection to Battery
  - Low Power Consumption for Active, Standby, and Scan Bluetooth Modes
  - Shutdown and Sleep Modes to Minimize Power Consumption
- Physical Interfaces:
  - UART Interface With Support for Maximum Bluetooth Data Rates
    - UART Transport Layer (H4) With Maximum Rate of 4 Mbps
    - Three-Wire UART Transport Layer (H5) With Maximum Rate of 4 Mbps
  - Fully Programmable Digital Pulse-Code Modulation (PCM)–I2S Codec Interface
- Flexibility for Easy Stack Integration and Validation Into MCUs and MPUs
- HCI Tester Tool to Evaluate RF Performance of the Device and Configure Service Pack

1.2 Applications

- Wireless Audio Solutions
- mPOS
- Medical Devices
- Set-Top Boxes (STBs)
- Wearable Devices
- Sensor Hub, Sensor Gateway
  - Home and Factory Automation

An IMPORTANT NOTICE at the end of this data sheet addresses availability, warranty, changes, use in safety-critical applications, intellectual property matters and other important disclaimers. PRODUCTION DATA.

1.3 Description

The CC2564C device from Texas Instruments™ is a complete *Bluetooth*® BR/EDR, and low energy HCI level solution, providing high performance and robust Bluetooth solution. Based on TI's seventh-generation Bluetooth core, the CC2564C device provides a product-proven solution that is Bluetooth 5.1-compliant, adding LE security and enhancing support for complex topologies (dual mode and link layer topologies). This HCI device offers best-in-class RF performance with about twice the throughput of other Bluetooth low-energy solutions, and includes a royalty-free software stack compatible with several host MCUs and MPUs, for a complete Bluetooth solution. Furthermore, TI's power-management hardware and software algorithms provide significant power savings in all commonly used Bluetooth BR, EDR, and low energy modes of operation.

The TI dual-mode Bluetooth stack software is certified and provided royalty free for MCUs and MPUs. The iPod® (MFi) protocol is supported by add-on software packages. For more information, see TI Dual-Mode Bluetooth Stack. Multiple profiles and sample applications, including the following, are supported:

- Serial port profile (SPP)
- Advanced audio distribution profile (A2DP)
- Audio/video remote control profile (AVRCP)
- Hands-free profile (HFP)
- Human interface device (HID)
- Generic attribute profile (GATT)
- Several Bluetooth low energy profiles and services

Device Information(1)

PART NUMBER	PACKAGE	BODY SIZE
CC2564CRVM	RVM (76)	8.00 mm × 8.00 mm × 0.60 mm

(1) For more information on these devices, see *Mechanical, Packaging, and Orderable Information*.

1.4 Functional Block Diagram

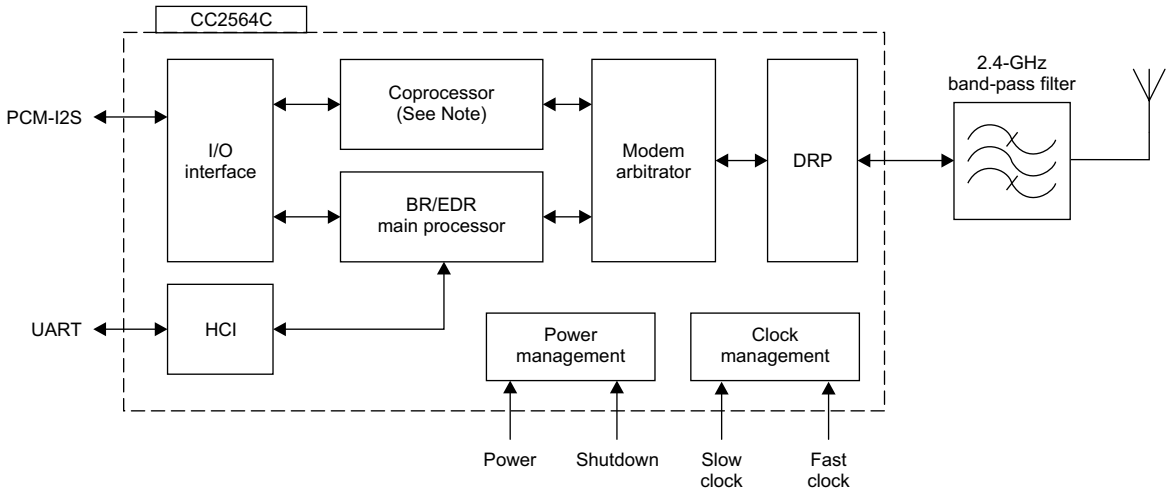

Copyright © 2016, Texas Instruments Incorporated

Note: The following technologies and assisted modes cannot be used simultaneously with the coprocessor: Bluetooth low energy, assisted HFP 1.6 (WBS), and assisted A2DP. Only one technology or assisted mode can be used at a time.

Copyright © 2016–2020, Texas Instruments Incorporated

Table of Contents

1 Device Overview **1**
1.1 Features 1
1.2 Applications 1
1.3 Description 2
1.4 Functional Block Diagram 2
2 Revision History **3**
3 Device Comparison **4**
3.1 Related Products 4
4 Terminal Configuration and Functions **5**
4.1 VQFNP-MR Package 5
5 Specifications **9**
5.1 Absolute Maximum Ratings 9
5.2 ESD Ratings 9
5.3 Power-On Hours 9
5.4 Recommended Operating Conditions 10
5.5 Power Consumption Summary 10
5.6 Electrical Characteristics 12
5.7 Thermal Resistance Characteristics for VQFNP-MR (RVM) Package 12
5.8 Timing and Switching Characteristics 13
5.9 RF Performance 20
6 Detailed Description **24**
6.1 Overview 24
6.2 Functional Block Diagram 24
6.3 Clock Inputs 24
6.4 Functional Blocks 28
6.5 Bluetooth BR and EDR Features 41
6.6 Bluetooth Low Energy Description 41
6.7 Bluetooth Transport Layers 42
6.8 Changes from the CC2564B Device to the CC2564C Device 42
7 Applications, Implementation, and Layout **43**
7.1 Reference Design Schematics and BOM 43
7.2 VQFNP-MR PCB Layout Guidelines 46
8 Device and Documentation Support **49**
8.1 Third-Party Products Disclaimer 49
8.2 Tools and Software 49
8.3 Device Nomenclature 50
8.4 Documentation Support 51
8.5 Support Resources 52
8.6 Trademarks 52
8.7 Electrostatic Discharge Caution 52
8.8 Export Control Notice 52
8.9 Glossary 52
9 Mechanical, Packaging, and Orderable Information **52**

2 Revision History

NOTE: Page numbers for previous revisions may differ from page numbers in the current version.

Changes from November 3, 2016 to June 22, 2020	Page
• Changed Bluetooth 4.2 to Bluetooth 5.1 in Section 1.1, *Features*	1
• Changed the *Features* bullet about the HCI Tester Tool	1
• Changed Bluetooth 4.2 to Bluetooth 5.1 in Section 1.3, *Description*	2
• Changed "twice the range" to "twice the throughput" in *Description*	2
• Changed Bluetooth 4.2 to Bluetooth 5.1 in Table 3-1, *CC2564C Device Features*	4
• Added footnote to *Current Consumption for Different Bluetooth BR and EDR Scenarios*	11
• Added footnote to *Current Consumption for Different Low-Energy Scenarios*	11
• Changed Bluetooth 4.2 to Bluetooth 5.1 in Section 6.5, *Bluetooth BR and EDR Features*	41
• Changed Bluetooth 4.2 to Bluetooth 5.1 in Section 6.6, *Bluetooth Low Energy Description*	41
• Changed *Reference Design Schematics and BOM*	43
• Changed entries in the *Device and Documentation Support* section	49
• Changed the link to the HCI Tester Tool	49
• Changed *CC2564C Device Nomenclature* image	50

Copyright © 2016–2020, Texas Instruments Incorporated

3 Device Comparison

Table 3-1 lists the features of the CC2564C device.

Table 3-1. CC2564C Device Features

DEVICE	DESCRIPTION	TECHNOLOGY SUPPORTED		ASSISTED MODES SUPPORTED(1)	
		BR, EDR	LOW ENERGY	HFP 1.6 (WBS)	A2DP
CC2564C	Bluetooth 5.1 + Bluetooth low energy	✓	✓	✓	✓

(1) The assisted modes (HFP 1.6 and A2DP) are not supported simultaneously. Furthermore, the assisted modes are not supported simultaneously with Bluetooth low energy.

3.1 Related Products

Wireless Connectivity The wireless connectivity portfolio offers a wide selection of low-power RF solutions suitable for a broad range of application. The offerings range from fully customized solutions to turnkey offerings with precertified hardware and software (protocol).

Companion Products Review products that are frequently purchased or used with the CC2564C product.

Reference Designs for CC2564 The TI Designs Reference Design Library is a robust reference design library spanning analog, embedded processor, and connectivity. Created by TI experts to help you jump-start your system design, all TI Designs include schematic or block diagrams, BOMs and design files to speed your time to market. Search and download designs at ti.com/tidesigns.

Copyright © 2016–2020, Texas Instruments Incorporated

4 Terminal Configuration and Functions

4.1 VQFNP-MR Package

4.1.1 Pin Diagram

Figure 4-1 shows the bottom view of the pin diagram (VQFNP-MR package).

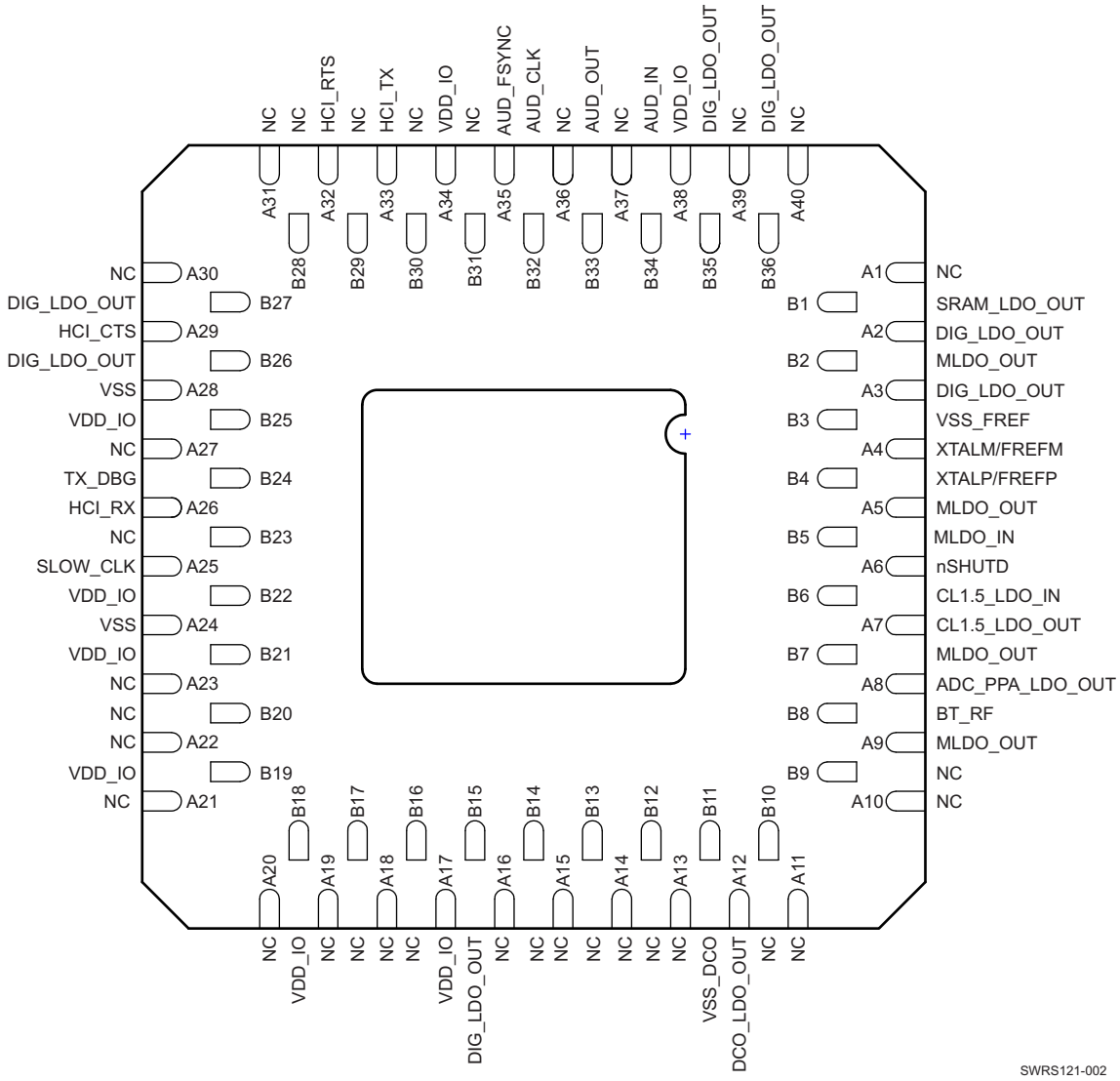

Figure 4-1. VQFNP-MR Package Pin Diagram
Bottom View

4.1.2 Pin Attributes

Table 4-1 describes the pin attributes for the VQFNP-MR package.

Table 4-1. Pin Attributes (VQFNP-MR Package)

NAME	NO.	PULL AT RESET	DEF. DIR.(1)	I/O Type(2)	DESCRIPTION	
I/O Signals						
AUD_CLK	B32	PD	I/O	HY, 4 mA	PCM clock	Fail-safe
AUD_FSYNC	A35	PD	I/O	4 mA	PCM frame-sync signal	Fail-safe
AUD_IN	B34	PD	I	4 mA	PCM data input	Fail-safe
AUD_OUT	B33	PD	O	4 mA	PCM data output	Fail-safe
HCI_CTS	A29	PU	I	8 mA	HCI UART clear-to-send The device is allowed to send data when HCI_CTS is low.	
HCI_RX	A26	PU	I	8 mA	HCI universal asynchronous receiver/transmitter (UART) data receive	
HCI_RTS	A32	PU	O	8 mA	HCI UART request-to-send The host is allowed to send data when HCI_RTS is low.	
HCI_TX	A33	PU	O	8 mA	HCI UART data transmit	
TX_DBG	B24	PU	O	2 mA	TI internal debug messages. TI recommends leaving an internal test point.	
Clock Signals						
SLOW_CLK	A25		I		32.768-kHz clock in	Fail-safe
XTALP/FREFP	B4		I		Fast clock in analog (sine wave) Output terminal of fast-clock crystal	Fail-safe
XTALM/FREFM	A4		I		Fast clock in digital (square wave) Input terminal of fast-clock crystal	Fail-safe
Analog Signals						
BT_RF	B8		I/O		*Bluetooth* RF I/O	
nSHUTD	A6	PD	I		Shutdown input (active low)	
Power and Ground Signals						
ADC_PPA_LDO_OUT	A8		O		ADC/PPA LDO output	
CL1.5_LDO_IN	B6		I		Power amplifier (PA) LDO input Connect directly to battery	
CL1.5_LDO_OUT	A7		O		PA LDO output	
DCO_LDO_OUT	A12		O		DCO LDO output	
DIG_LDO_OUT	A2, A3, B15, B26, B27, B35, B36		O		Digital LDO output QFN pin B26 or B27 must be shorted to other DIG_LDO_OUT pins on the PCB.	
MLDO_IN	B5		I		Main LDO input Connect directly to battery	
MLDO_OUT	A5, A9, B2, B7		I/O		Main LDO output (1.8-V nominal)	
SRAM_LDO_OUT	B1		O		SRAM LDO output	

(1) I = input; O = output; I/O = bidirectional
(2) I/O Type: Digital I/O cells. HY = input hysteresis, current = typical output current

Copyright © 2016–2020, Texas Instruments Incorporated

Table 4-1. Pin Attributes (VQFNP-MR Package) (continued)

NAME	NO.	PULL AT RESET	DEF. DIR.(1)	I/O Type(2)	DESCRIPTION
VDD_IO	A17, A34, A38, B18, B19, B21, B22, B25		I		I/O power supply (1.8-V nominal)
VSS	A24, A28		I		Ground
VSS_DCO	B11		I		DCO ground
VSS_FREF	B3		I		Fast clock ground

4.1.3 Connections for Unused Pins

Section 4.1.3 lists the connections for unused signals for the VQFNP-MR package.

PIN NUMBER	FUNCTION	DESCRIPTION
A1	NC	Not connected
A10	NC	Not connected
A11	NC	Not connected
A14	NC	Not connected
A18	NC	Not connected
A19	NC	Not connected
A20	NC	Not connected
A21	NC	Not connected
A22	NC	Not connected
A23	NC	Not connected
A27	NC	Not connected
A30	NC	Not connected
A31	NC	Not connected
A40	NC	Not connected
B9	NC	Not connected
B10	NC	Not connected
B16	NC	Not connected
B17	NC	Not connected
B20	NC	Not connected
B23	NC	Not connected
A13	NC	TI internal use
A15	NC	TI internal use
A16	NC	TI internal use
A36	NC	TI internal use
A37	NC	TI internal use
A39	NC	TI internal use
B12	NC	TI internal use
B13	NC	TI internal use
B14	NC	TI internal use
B28	NC	TI internal use
B29	NC	TI internal use
B30	NC	TI internal use
B31	NC	TI internal use

Copyright © 2016–2020, Texas Instruments Incorporated

Copyright © 2016–2020, Texas Instruments Incorporated

5 Specifications

Unless otherwise indicated, all measurements are taken at the device pins on the TI test evaluation board (EVB). All specifications are over process, voltage, and temperature, unless otherwise indicated.

5.1 Absolute Maximum Ratings

Over operating free-air temperature range (unless otherwise indicated). All parameters are measured as follows: VDD_IN = 3.6 V and VDD_IO = 1.8 V (unless otherwise indicated).(1)

		MIN	MAX	UNIT
Supply voltage	VDD_IN	–0.5	4.8	V(2)
	VDDIO_1.8 V	–0.5	2.145	V
Input voltage to analog pins(3)		–0.5	2.1	V
Input voltage to all other pins		–0.5	VDD_IO + 0.5	V
Bluetooth RF inputs			10	dBm
Operating ambient temperature, T_A(4)		–40	85	°C
Storage temperature, T_{stg}		–55	125	°C

(1) Stresses beyond those listed under *Absolute Maximum Ratings* may cause permanent damage to the device. These are stress ratings only and functional operation of the device at these or any other conditions beyond those indicated under *Recommended Operating Conditions* is not implied. Exposure to absolute-maximum-rated conditions for extended periods may affect device reliability.
(2) Maximum allowed depends on accumulated time at that voltage: VDD_IN is defined in Section 7.1.
(3) Analog pins: BT_RF, XTALP, and XTALM
(4) The reference design supports a temperature range of –20°C to +70°C because of the operating conditions of the crystal.

5.2 ESD Ratings

			VALUE	UNIT
$V_{(ESD)}$	Electrostatic discharge	Human-body model (HBM), per ANSI/ESDA/JEDEC JS-001(1)	±500	V
		Charged device model (CDM), per JEDEC specification JESD22-C101(2)	±250	

(1) JEDEC document JEP155 states that 500-V HBM allows safe manufacturing with a standard ESD control process.
(2) JEDEC document JEP157 states that 250-V CDM allows safe manufacturing with a standard ESD control process.

5.3 Power-On Hours

This information is provided solely for your convenience and does not extend or modify the warranty provided under TI's standard terms and conditions for TI semiconductor products.

DEVICE	CONDITIONS	POWER-ON HOURS
CC2564C	Duty cycle = 25% active and 75% sleep $T_{ambient}$ = 85ºC	15,400 (7 years)

Copyright © 2016–2020, Texas Instruments Incorporated

5.4 Recommended Operating Conditions

			MIN	MAX	UNIT
VDD_IN	Power supply voltage		1.7	4.8	V
VDD_IO	I/O power supply voltage		1.62	1.92	V
V_{IH}	High-level input voltage	Default condition	0.65 × VDD_IO	VDD_IO	V
V_{IL}	Low-level input voltage	Default condition	0	0.35 × VDD_IO	V
t_r and t_f	I/O input rise and all times, 10% to 90%—asynchronous mode		1	10	ns
	I/O input rise and fall times, 10% to 90%—synchronous mode (PCM)		1	2.5	ns
	Maximum ripple on VDD_IN (sine wave) for 1.8 V (DC-DC) mode	Condition: 0 to 0.1 MHz		60	mV_{p-p}
		Condition: 0.1 to 0.5 MHz		50	
		Condition: 0.5 to 2.5 MHz		30	
		Condition: 2.5 to 3.0 MHz		15	
		Condition: > 3.0 MHz		5	
	Voltage dips on VDD_IN (VBAT) Duration = 577 µs to 2.31 ms, period = 4.6 ms			400	mV
	Maximum ambient operating temperature(1)(2)		–40	85	°C

(1) The device can be reliably operated for 7 years at $T_{ambient}$ of 85°C, assuming 25% active mode and 75% sleep mode (15,400 cumulative active power-on hours).
(2) A crystal-based solution is limited by the temperature range required for the crystal to meet 20 ppm.

5.5 Power Consumption Summary

5.5.1 Static Current Consumption

OPERATIONAL MODE	MIN	TYP	MAX	UNIT
Shutdown mode(1)		1	7	µA
Deep sleep mode(2)		40	105	µA
Total I/O current consumption in active mode			1	mA
Continuous transmission—GFSK(3)			107	mA
Continuous transmission—EDR(4)(5)			112.5	mA

(1) VBAT + VIO + $V_{SHUTDOWN}$
(2) VBAT + VIO
(3) At maximum output power 12 dBm
(4) At maximum output power 10 dBm
(5) Both π/4 DQPSK and 8DPSK

Copyright © 2016–2020, Texas Instruments Incorporated

5.5.2 Dynamic Current Consumption

5.5.2.1 Current Consumption for Different Bluetooth BR and EDR Scenarios

Conditions: VDD_IN = 3.6 V, 25°C, 26-MHz XTAL, nominal unit, 10-dBm output power(1)

OPERATIONAL MODE	MASTER AND SLAVE	AVERAGE CURRENT	UNIT
SCO link HV3	Master and slave	13.7	mA
Extended SCO (eSCO) link EV3 64 kbps, no retransmission	Master and slave	13.2	mA
eSCO link 2-EV3 64 kbps, no retransmission	Master and slave	10	mA
GFSK full throughput: TX = DH1, RX = DH5	Master and slave	40.5	mA
EDR full throughput: TX = 2-DH1, RX = 2-DH5	Master and slave	41.2	mA
EDR full throughput: TX = 3-DH1, RX = 3-DH5	Master and slave	41.2	mA
Sniff, four attempts, 1.28 seconds	Master and slave	145	µA
Page or inquiry scan 1.28 seconds, 11.25 ms	Master and slave	320	µA
Page (1.28 seconds) and inquiry (2.56 seconds) scans, 11.25 ms	Master and slave	445	µA
A2DP source	Master	13.9	mA
A2DP sink	Master	15.2	mA
Assisted A2DP source	Master	16.9	mA
Assisted A2DP sink	Master	18.1	mA
Assisted WBS EV3; retransmit effort = 2; maximum latency = 8 ms	Master and slave	17.5 and 18.5	mA
Assisted WBS 2EV3; retransmit effort = 2; maximum latency = 12 ms	Master and slave	11.9 and 13	mA

(1) To modify maximum output power, use an HCI VS command.

5.5.2.2 Current Consumption for Different Low-Energy Scenarios

Conditions: VDD_IN = 3.6 V, 25°C, nominal unit, 10-dBm output power(1)

MODE		DESCRIPTION	AVERAGE CURRENT	UNIT
Advertising, nonconnectable		Advertising in all three channels 1.28-seconds advertising interval 15 bytes advertise data	114	µA
Advertising, discoverable		Advertising in all three channels 1.28-seconds advertising interval 15 bytes advertise data	138	µA
Scanning		Listening to a single frequency per window 1.28-seconds scan interval 11.25-ms scan window	324	µA
Connected	Master role	500-ms connection interval 0-ms slave connection latency Empty TX and RX LL packets	169	µA
	Slave role		199	

(1) To modify maximum output power, use an HCI VS command.

Copyright © 2016–2020, Texas Instruments Incorporated

5.6 Electrical Characteristics

RATING			CONDITION	MIN	MAX	UNIT
High-level output voltage, V_{OH}			At 2, 4, 8 mA	0.8 × VDD_IO	VDD_IO	V
			At 0.1 mA	VDD_IO – 0.2	VDD_IO	
Low-level output voltage, V_{OL}			At 2, 4, 8 mA	0	0.2 × VDD_IO	V
			At 0.1 mA	0	0.2	
I/O input impedance			Resistance	1		MΩ
			Capacitance		5	pF
Output rise and fall times, 10% to 90% (digital pins)			C_L = 20 pF		10	ns
I/O pull currents	PCM–I2S bus, TX_DBG	PU	Typical = 6.5	3.5	9.7	µA
		PD	Typical = 27	9.5	55	
	All others	PU	Typical = 100	50	300	
		PD	Typical = 100	50	360	

5.7 Thermal Resistance Characteristics for VQFNP-MR (RVM) Package

over operating free-air temperature range (unless otherwise noted)

THERMAL METRICS(1)		C/W(2)
$R\theta_{ja}$	Junction-to-free-air	34.6
$R\theta_{jctop}$	Junction-to-case-top	17.9
$R\theta_{jcbottom}$	Junction-to-case-bottom	1.6
$R\theta_{jb}$	Junction-to-board	12.0
φ_{jt}	Junction-to-package-top	0.2
φ_{jb}	Junction-to-package-bottom	12.0

(1) For more information about traditional and new thermal metrics, see *Semiconductor and IC Package Thermal Metrics*.
(2) These values are based on a JEDEC-defined 2S2P system (with the exception of the Theta JC [RΘJC] value, which is based on a JEDEC-defined 1S0P system) and will change based on environment as well as application. For more information, see these EIA/JEDEC standards:
- JESD51-2, *Integrated Circuits Thermal Test Method Environmental Conditions - Natural Convection (Still Air)*
- JESD51-3, *Low Effective Thermal Conductivity Test Board for Leaded Surface Mount Packages*
- JESD51-7, *High Effective Thermal Conductivity Test Board for Leaded Surface Mount Packages*
- JESD51-9, *Test Boards for Area Array Surface Mount Package Thermal Measurements*

Power dissipation of 2 W and an ambient temperature of 70ºC is assumed.

Copyright © 2016–2020, Texas Instruments Incorporated

5.8 Timing and Switching Characteristics

5.8.1 Device Power Supply

The CC2564C power-management hardware and software algorithms provide significant power savings, which is a critical parameter in an MCU-based system.

The power-management module is optimized for drawing extremely low currents.

5.8.1.1 Power Sources

The CC2564C device requires two power sources:

- VDD_IN: main power supply for the device
- VDD_IO: power source for the 1.8-V I/O ring

The HCI module includes several on-chip voltage regulators for increased noise immunity and can be connected directly to the battery.

5.8.1.2 Device Power-Up and Power-Down Sequencing

The device includes the following power-up requirements (see Figure 5-1):

- nSHUTD must be low. VDD_IN and VDD_IO are don't care I/O pins when nSHUTD is low. However, signals are not allowed on the I/O pins if I/O power is not supplied, because the I/Os are not fail-safe. Exceptions are SLOW_CLK_IN and AUD_xxx, which are fail-safe and can tolerate external voltages with no VDD_IO and VDD_IN.
- VDD_IO and VDD_IN must be stable before releasing nSHUTD.
- The fast clock must be stable within 20 ms of nSHUTD going high.
- The slow clock must be stable within 2 ms of nSHUTD going high.

The device indicates that the power-up sequence is complete by asserting RTS low, which occurs up to 100 ms after nSHUTD goes high. If RTS does not go low, the device is not powered up. In this case, ensure that the sequence and requirements are met.

Copyright © 2016–2020, Texas Instruments Incorporated

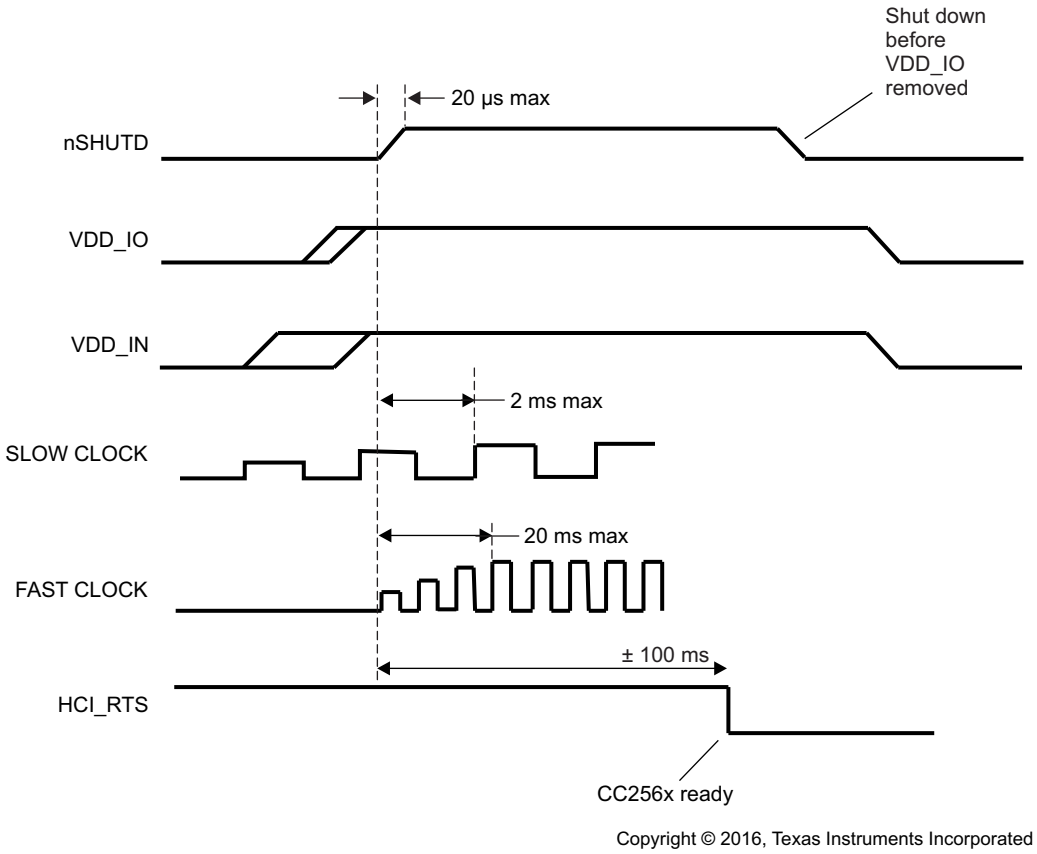

Copyright © 2016, Texas Instruments Incorporated

Figure 5-1. Power-Up and Power-Down Sequencing

5.8.1.3 Power Supplies and Shutdown—Static States

The nSHUTD signal puts the device in ultra-low-power mode and performs an internal reset to the device. The rise time for nSHUTD must not exceed 20 µs; nSHUTD must be low for a minimum of 5 ms.

To prevent conflicts with external signals, all I/O pins are set to the high-impedance (Hi-Z) state during shutdown and power up of the device. The internal pull resistors are enabled on each I/O pin, as described in Section 4.1.2. Table 5-1 lists and describes the static operation states.

Table 5-1. Power Modes

	VDD_IN (1)	VDD_IO(1)	nSHUTD(1)	PM_MODE	COMMENTS
1	None	None	Asserted	Shutdown	I/O state is undefined. No I/O voltages are allowed on nonfail-safe pins.
2	None	None	Deasserted	Not allowed	I/O state is undefined. No I/O voltages are allowed on nonfail-safe pins.
3	None	Present	Asserted	Shutdown	I/Os are defined as tri-state pins with internal pullup or pulldown enabled.
4	None	Present	Deasserted	Not allowed	I/O state is undefined. No I/O voltages are allowed on nonfail-safe pins.
5	Present	None	Asserted	Shutdown	I/O state is undefined.
6	Present	None	Deasserted	Not allowed	I/O state is undefined. No I/O voltages are allowed on nonfail-safe pins.
7	Present	Present	Asserted	Shutdown	I/Os are defined as tri-state pins with internal pullup or pulldown enabled.
8	Present	Present	Deasserted	Active	See Section 5.8.1.4.

(1) The terms *None* or *Asserted* can imply any of the following conditions: directly pulled to ground or driven low, pulled to ground through a pulldown resistor, or left NC or floating (high-impedance output stage).

Copyright © 2016–2020, Texas Instruments Incorporated

5.8.1.4 I/O States in Various Power Modes

CAUTION

Some device I/Os are not fail-safe (see Section 4.1.2). Fail-safe means that the pins do not draw current from an external voltage applied to the pin when I/O power is not supplied to the device. External voltages are not allowed on these I/O pins when the I/O supply voltage is not supplied because of possible damage to the device.

Table 5-2 lists the I/O states in various power modes.

Table 5-2. I/O States in Various Power Modes

I/O NAME	SHUTDOWN(1)		DEFAULT ACTIVE(1)		DEEP SLEEP(1)	
	I/O State	Pull	I/O State	Pull	I/O State	Pull
HCI_RX	Z	PU	I	PU	I	PU
HCI_TX	Z	PU	O-H		O	
HCI_RTS	Z	PU	O-H		O	
HCI_CTS	Z	PU	I	PU	I	PU
AUD_CLK	Z	PD	I	PD	I	PD
AUD_FSYNC	Z	PD	I	PD	I	PD
AUD_IN	Z	PD	I	PD	I	PD
AUD_OUT	Z	PD	Z	PD	Z	PD
TX_DBG	Z	PU	O			

(1) I = input, O = output, Z = Hi-Z, – = no pull, PU = pullup, PD = pulldown, H = high, L = low

5.8.1.5 nSHUTD Requirements

PARAMETER		MIN	MAX	UNIT
V_{IH}	Operation mode level(1)	1.42	1.98	V
V_{IL}	Shutdown mode level(1)	0	0.4	V
	Minimum time for nSHUT_DOWN low to reset the device	5		ms
t_r and t_f	Rise and fall times		20	µs

(1) An internal pulldown retains shutdown mode when no external signal is applied to this pin.

Copyright © 2016–2020, Texas Instruments Incorporated

5.8.2 Clock Specifications

5.8.2.1 Slow Clock Requirements

An external source must supply the slow clock and connect to the SLOW_CLK_IN pin (for example, the host or external crystal oscillator). The source must be a digital signal in the range of 0 to 1.8 V. The accuracy of the slow-clock frequency must be 32.768 kHz ±250 ppm for Bluetooth use (as specified in the Bluetooth specification). The external slow clock must be stable within 64 slow-clock cycles (2 ms) following the release of nSHUTD.

CHARACTERISTICS		CONDITION	MIN	TYP	MAX	UNIT
	Input slow-clock frequency			32768		Hz
	Input slow-clock accuracy (Initial + temp + aging)	Bluetooth			±250	ppm
t_r and t_f	Input transition time t_r and t_f (10% to 90%)				200	ns
	Frequency input duty cycle		15%	50%	85%	
V_{IH}	Slow-clock input voltage limits	Square wave, DC-coupled	0.65 × VDD_IO		VDD_IO	V peak
V_{IL}			0		0.35 × VDD_IO	V peak
	Input impedance		1			MΩ
	Input capacitance				5	pF

5.8.2.2 External Fast Clock Crystal Requirements and Operation

CHARACTERISTICS		CONDITION	MIN	TYP	MAX	UNIT
f_{in}	Supported crystal frequencies			26, 38.4		MHz
	Frequency accuracy (Initial + temperature + aging)				±20	ppm
	Crystal oscillator negative resistance	26 MHz, external capacitance = 8 pF I_{osc} = 0.5 mA	650	940		Ω
		26 MHz, external capacitance = 20 pF I_{osc} = 2.2 mA	490	710		

Copyright © 2016–2020, Texas Instruments Incorporated

5.8.2.3 Fast Clock Source Requirements (–40°C to +85°C)

CHARACTERISTICS	CONDITION		MIN	TYP	MAX	UNIT
Supported frequencies, F_{REF}				26, 38.4		MHz
Reference frequency accuracy	Initial + temp + aging				±20	ppm
Fast-clock input voltage limits	Square wave, DC-coupled	V_{IL}	–0.2		0.37	V
		V_{IH}	1.0		2.1	V
	Sine wave, AC-coupled		0.4		1.6	V_{p-p}
	Sine wave, DC-coupled		0.4		1.6	V_{p-p}
	Sine wave input limits, DC-coupled		0.0		1.6	V
Fast-clock input rise time (as % of clock period)	Square wave, DC-coupled				10%	
Duty cycle			35%	50%	65%	
Phase noise for 26 MHz	@ offset = 1 kHz				–123.4	dBc/Hz
	@ offset = 10 kHz				–133.4	
	@ offset = 100 kHz				–138.4	

5.8.3 Peripherals

5.8.3.1 UART

Figure 5-2 shows the UART timing diagram.

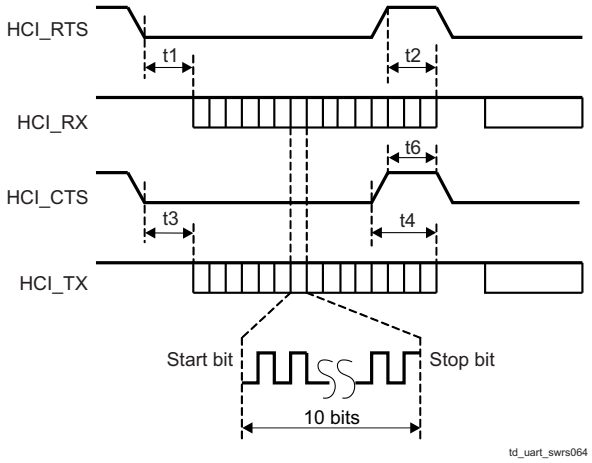

Figure 5-2. UART Timing

Table 5-3 lists the UART timing characteristics.

Table 5-3. UART Timing Characteristics

SYMBOL	CHARACTERISTICS	CONDITION	MIN	TYP	MAX	UNIT
	Baud rate		37.5		4000	kbps
	Baud rate accuracy per byte	Receive and transmit	–2.5%		1.5%	
	Baud rate accuracy per bit	Receive and transmit	–12.5%		12.5%	
t1	RTS low to RX_DATA on		0	2		µs
t2	RTS high to RX_DATA off	Interrupt set to 1/4 FIFO			16	byte
t3	CTS low to TX_DATA on		0	2		µs
t4	CTS high to TX_DATA off	Hardware flow control			1	byte
t6	CTS-high pulse width		1			bit

Copyright © 2016–2020, Texas Instruments Incorporated

Figure 5-3 shows the UART data frame.

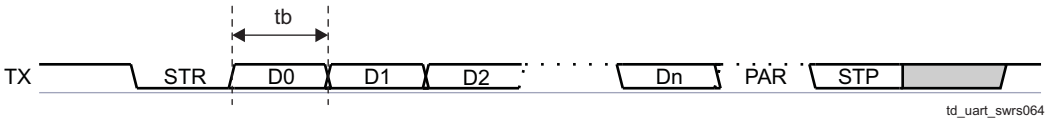

Figure 5-3. Data Frame

Table 5-4 describes the symbols used in Figure 5-3.

Table 5-4. Data Frame Key

SYMBOL	DESCRIPTION
STR	Start bit
D0...Dn	Data bits (LSB first)
PAR	Parity bit (optional)
STP	Stop bit

5.8.3.2 PCM

Figure 5-4 shows the interface timing for the PCM.

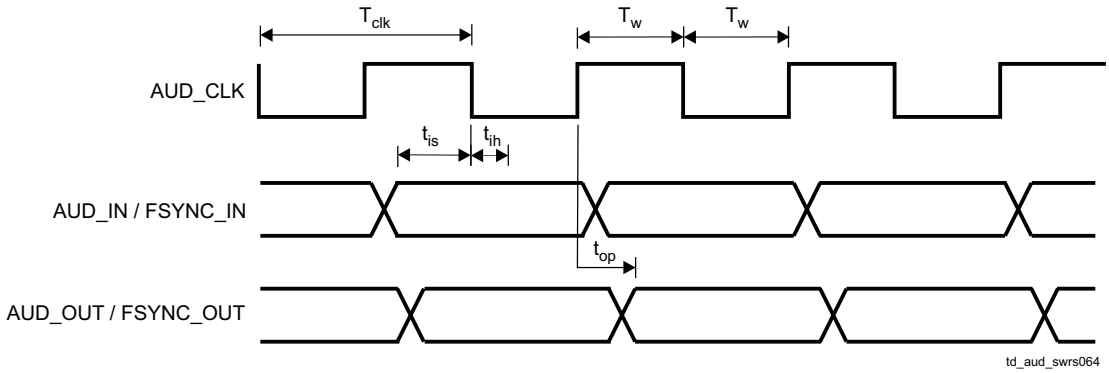

Figure 5-4. PCM Interface Timing

Table 5-5 lists the associated PCM master parameters.

Table 5-5. PCM Master

SYMBOL	PARAMETER	CONDITION	MIN	MAX	UNIT
t_{clk}	Cycle time		244.14 (4.096 MHz)	15625 (64 kHz)	ns
t_w	High or low pulse width		50% of T_{clk} min		ns
t_{is}	AUD_IN setup time		25		ns
t_{ih}	AUD_IN hold time		0		ns
t_{op}	AUD_OUT propagation time	40-pF load	0	10	ns
t_{op}	FSYNC_OUT propagation time	40-pF load	0	10	ns

Copyright © 2016–2020, Texas Instruments Incorporated

Table 5-6 lists the associated PCM slave parameters.

Table 5-6. PCM Slave

SYMBOL	PARAMETER	CONDITION	MIN	MAX	UNIT
t_{clk}	Cycle time		66.67 (15 MHz)		ns
t_w	High or low pulse width		40% of T_{clk}		ns
T_{is}	AUD_IN setup time		8		ns
t_{ih}	AUD_IN hold time		0		ns
t_{is}	AUD_FSYNC setup time		8		ns
t_{ih}	AUD_FSYNC hold time		0		ns
t_{op}	AUD_OUT propagation time	40-pF load	0	21	ns

Copyright © 2016–2020, Texas Instruments Incorporated

5.9 RF Performance

5.9.1 Bluetooth BR and EDR RF Performance

All parameters in this section that are fast-clock dependent are verified using a 26-MHz XTAL and 38.4-MHz TCXO.

5.9.1.1 Bluetooth Receiver—In-Band Signals

CHARACTERISTICS	CONDITION		MIN	TYP	MAX	BLUETOOTH SPECIFICATION	UNIT
Operation frequency range			2402		2480		MHz
Channel spacing				1			MHz
Input impedance				50			Ω
Sensitivity, dirty TX on(1)	GFSK, BER = 0.1%			–95		–70	dBm
	π/4-DQPSK, BER = 0.01%			–94.5		–70	
	8DPSK, BER = 0.01%			–87.5		–70	
BER error floor at sensitivity + 10 dB, dirty TX off	π/4-DQPSK		1E–6	1E–7		1E–5	
	8DPSK		1E–6			1E–5	
Maximum usable input power	GFSK, BER = 0.1%		–5			–20	dBm
	π/4-DQPSK, BER = 0.1%		–10				
	8DPSK, BER = 0.1%		–10				
Intermodulation characteristics	Level of interferers (for n = 3, 4, and 5)		–36	–30		–39	dBm
C/I performance(2) Image = –1 MHz	GFSK, cochannel			8	10	11	dB
	EDR, cochannel	π/4-DQPSK		9.5	11	13	
		8DPSK		16.5	20	21	
	GFSK, adjacent ±1 MHz			–10	–5	0	
	EDR, adjacent ±1 MHz, (image)	π/4-DQPSK		–10	–5	0	
		8DPSK		–5	–1	5	
	GFSK, adjacent +2 MHz			–38	–35	–30	
	EDR, adjacent, +2 MHz	π/4-DQPSK		–38	–35	–30	
		8DPSK		–38	–30	–25	
	GFSK, adjacent –2 MHz			–28	–20	–20	
	EDR, adjacent –2 MHz	π/4-DQPSK		–28	–20	–20	
		8DPSK		–22	–13	–13	
	GFSK, adjacent ≥ |±3| MHz			–45	–43	–40	
	EDR, adjacent ≥ |±3| MHz	π/4-DQPSK		–45	–43	–40	
		8DPSK		–44	–36	–33	
RF return loss				–10			dB
RX mode LO leakage	Frf = (received RF – 0.6 MHz)			–63	–58		dBm

(1) Sensitivity degradation up to 3 dB may occur for minimum and typical values where the Bluetooth frequency is a harmonic of the fast clock.
(2) Numbers show ratio of desired signal to interfering signal. Smaller numbers indicate better C/I performance.

5.9.1.2 Bluetooth Receiver—General Blocking

CHARACTERISTICS	CONDITION	MIN	TYP	UNIT
Blocking performance over full range, according to Bluetooth specification(1)	30 to 2000 MHz		–6	dBm
	2000 to 2399 MHz		–6	
	2484 to 3000 MHz		–6	
	3 to 12.75 GHz		–6	

(1) Exceptions are taken out of the total 24 allowed in the Bluetooth specification.

Copyright © 2016–2020, Texas Instruments Incorporated

5.9.1.3 Bluetooth Transmitter—GFSK

CHARACTERISTICS		MIN	TYP	MAX	BLUETOOTH SPECIFICATION	UNIT
Maximum RF output power(1)	VDD_IN = VBAT		12			dBm
	VDD_IN = external regulator to 1.8 V		10			
Power variation over Bluetooth band		–1		1		dB
Gain control range			30			dB
Power control step			5		2 to 8	dB
Adjacent channel power |M–N| = 2			–45		≤ –20	dBm
Adjacent channel power |M–N| > 2			–50		≤ –40	dBm

(1) To modify maximum output power, use an HCI VS command.

5.9.1.4 Bluetooth Transmitter—EDR

CHARACTERISTICS			MIN	TYP	MAX	BLUETOOTH SPECIFICATION	UNIT
EDR output power(1)	π/4-DQPSK	VDD_IN = VBAT		5.5			dBm
		VDD_IN = external regulator to 1.8 V		5.5			
	8DPSK	VDD_IN = VBAT		5.5			
		VDD_IN = external regulator to 1.8 V		5.5			
EDR relative power			–2		1	–4 to +1	dB
Power variation over Bluetooth band			–1		1		dB
Gain control range				30			dB
Power control step				5		2 to 8	dB
Adjacent channel power |M–N| = 1				–36		≤ –26	dBc
Adjacent channel power |M–N| = 2(2)				–30		≤ –20	dBm
Adjacent channel power |M–N| > 2(2)				–42		≤ –40	dBm

(1) To modify maximum output power, use an HCI VS command.
(2) Assumes 3-dB insertion loss from Bluetooth RF ball to antenna.

5.9.1.5 Bluetooth Modulation—GFSK

CHARACTERISTICS		CONDITION		MIN	TYP	MAX	BLUETOOTH SPECIFICATION	UNIT
	–20-dB bandwidth	GFSK			925		≤ 1000	kHz
F1 avg	Modulation characteristics	Δf1avg	Mod data = 4 1 s, 4 0 s: 111100001111...		165		140 to 175	kHz
F2 max		Δf2max ≥ limit for at least 99.9% of all Δf2max	Mod data = 1010101...		130		> 115	kHz
		Δf2avg, Δf1avg			88%		> 80%	
	Absolute carrier frequency drift	DH1		–25		25	< ±25	kHz
		DH3 and DH5		–35		35	< ±40	
	Drift rate					15	< 20	kHz/50 µs
	Initial carrier frequency tolerance	f0–fTX		–75		+75	< ±75	kHz

Copyright © 2016–2020, Texas Instruments Incorporated

5.9.1.6 Bluetooth Modulation—EDR

CHARACTERISTICS	CONDITION	MIN	TYP	MAX	BLUETOOTH SPECIFICATION	UNIT
Carrier frequency stability					≤ 10	kHz
Carrier frequency stability				±5	≤ 10	kHz
Initial carrier frequency tolerance				±75	±75	kHz
RMS DEVM(1)	π/4-DQPSK		6%		20%	
	8DPSK		6%		13%	
99% DEVM(1)	π/4-DQPSK			30%	30%	
	8DPSK			20%	20%	
Peak DEVM(1)	π/4-DQPSK		14%		35%	
	8DPSK		16%		25%	

(1) Maximum performance refers to maximum TX power.

5.9.1.7 Bluetooth Transmitter—Out-of-Band and Spurious Emissions

CHARACTERISTICS	CONDITION	TYP	MAX	UNIT
Second harmonic(1)	Measured at maximum output power	–14	–2	dBm
Third harmonic(1)		–10	–6	dBm
Fourth harmonics(1)		–19	–11	dBm

(1) Meets FCC and ETSI requirements with the external filter listed in Table 7-1.

5.9.2 Bluetooth low energy RF Performance

All parameters in this section that are fast-clock dependent are verified using a 26-MHz XTAL and a 38.4-MHz TCXO.

5.9.2.1 Bluetooth low energy Receiver—In-Band Signals

CHARACTERISTIC	CONDITION	MIN	TYP	MAX	BLUETOOTH low energy SPECIFICATION	UNIT
Operation frequency range		2402		2480		MHz
Channel spacing			2			MHz
Input impedance			50			Ω
Sensitivity, dirty TX on(1)	PER = 30.8%; dirty TX on		–96		≤ –70	dBm
Maximum usable input power	GMSK, PER = 30.8%	–5			≥ –10	dBm
Intermodulation characteristics	Level of interferers (for n = 3, 4, 5)		–30		≥ –50	dBm
C/I performance(2) Image = –1 MHz	GMSK, cochannel		8		≤ 21	dB
	GMSK, adjacent ±1 MHz		–5		≤ 15	
	GMSK, adjacent +2 MHz		–45		≤ –17	
	GMSK, adjacent –2 MHz		–22		≤ –15	
	GMSK, adjacent ≥ |±3| MHz		–47		≤ –27	
RX mode LO leakage	Frf = (received RF – 0.6 MHz)		–63			dBm

(1) Sensitivity degradation up to 3 dB may occur where the Bluetooth low energy frequency is a harmonic of the fast clock.
(2) Numbers show wanted signal-to-interfering signal ratio. Smaller numbers indicate better C/I performance.

Copyright © 2016–2020, Texas Instruments Incorporated

5.9.2.2 Bluetooth low energy Receiver—General Blocking

CHARACTERISTICS	CONDITION	MIN	TYP	BLUETOOTH low energy SPECIFICATION	UNIT
Blocking performance over full range, according to Bluetooth low energy specification(1)	30 to 2000 MHz		–15	≥ –30	dBm
	2000 to 2399 MHz		–15	≥ –35	
	2484 to 3000 MHz		–15	≥ –35	
	3 to 12.75 GHz		–15	≥ –30	

(1) Exceptions are taken out of the total 10 allowed in the Bluetooth low energy specification.

5.9.2.3 Bluetooth low energy Transmitter

CHARACTERISTICS		MIN	TYP	MAX	BLUETOOTH low energy SPECIFICATION	UNIT
RF output power	VDD_IN = VBAT		12(1)		≤10	dBm
	VDD_IN = External regulator to 1.8 V		10		≤10	
Power variation over Bluetooth low energy band				1		dB
Adjacent channel power |M-N| = 2			–45		≤ –20	dBm
Adjacent channel power |M-N| > 2			–50		≤ –30	dBm

(1) To achieve the Bluetooth low energy specification of 10-dBm maximum, an insertion loss of > 2 dB is assumed between the RF ball and the antenna. Otherwise, use an HCI VS command to modify the output power.

5.9.2.4 Bluetooth low energy Modulation

CHARACTERISTICS		CONDITION		MIN	TYP	MAX	BLUETOOTH low energy SPECIFICATION	UNIT
Δf1 avg	Modulation characteristics	Δf1avg	Mod data = 4 1s, 4 0s: 1111000011110000...	240	250	260	225 to 275	kHz
Δf2 max		Δf2max ≥ limit for at least 99.9% of all Δf2max	Mod data = 1010101...	185	210		≥ 185	kHz
		Δf2avg, Δf1avg		0.85	0.9		≥ 0.8	
	Absolute carrier frequency drift			–25		25	≤ ±50	kHz
	Drift rate					15	≤ 20	kHz/50 ms
	Initial carrier frequency tolerance			–75		75	≤ ±100	kHz

5.9.2.5 Bluetooth low energy Transceiver, Out-of-Band and Spurious Emissions

CHARACTERISTICS	CONDITION	TYP	MAX	UNIT
Second harmonic(1)	Measured at maximum output power	–14	–2	dBm
Third harmonic(1)		–10	–6	dBm
Fourth harmonics(1)		–19	–11	dBm

(1) Meets FCC and ETSI requirements with the external filter listed in Table 7-1.

Copyright © 2016–2020, Texas Instruments Incorporated

6 Detailed Description

6.1 Overview

The CC2564C architecture comprises a DSP and a point-to-multipoint baseband core. The architecture is based on a single-processor ARM7TDMI® core. The device includes several on-chip peripherals to enable easy communication with a host system and the Bluetooth BR, EDR, and low energy core.

6.2 Functional Block Diagram

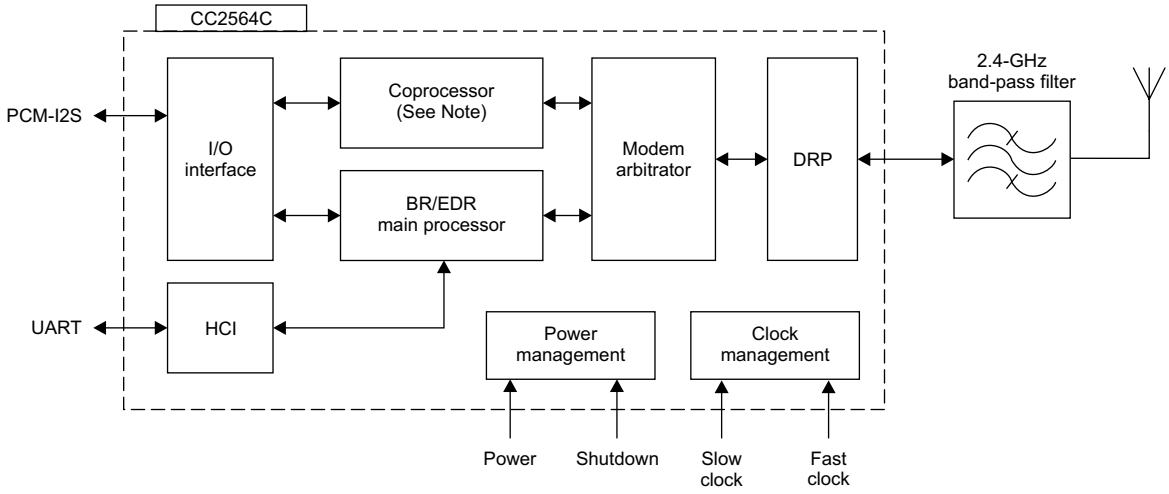

Copyright © 2016, Texas Instruments Incorporated

NOTE: The following technologies and assisted modes cannot be used simultaneously with the coprocessor: Bluetooth low energy, assisted HFP 1.6 (WBS), and assisted A2DP. Only one technology or assisted mode can be used at a time.

Figure 6-1. CC2564C Functional Block Diagram

6.3 Clock Inputs

This section describes the available clock inputs. For specifications, see Section 5.8.2.

6.3.1 Slow Clock

An external source must supply the slow clock and connect to the SLOW_CLK_IN pin (for example, the host or external crystal oscillator). The source must be a digital signal in the range of 0 V to 1.8 V. The accuracy of the slow-clock frequency must be 32.768 kHz ±250 ppm for Bluetooth use (as specified in the Bluetooth specification). The external slow clock must be stable within 64 slow-clock cycles (2 ms) following the release of nSHUTD.

6.3.2 Fast Clock Using External Clock Source

An external clock source is fed to an internal pulse-shaping cell to provide the fast-clock signal for the device. The device incorporates an internal, automatic clock-scheme detection mechanism that automatically detects the fast-clock scheme used and configures the FREF cell accordingly. This mechanism ensures that the electrical characteristics (loading) of the fast-clock input remain static regardless of the scheme used and eliminates any power-consumption penalty-versus-scheme used.

The frequency variation of the fast-clock source must not exceed ±20 ppm (as defined by the Bluetooth specification).

The external clock can be AC- or DC-coupled, sine or square wave.

Copyright © 2016–2020, Texas Instruments Incorporated

6.3.2.1 External F_{REF} DC-Coupled

Figure 6-2 and Figure 6-3 show the clock configuration when using a square wave, DC-coupled external source for the fast-clock input.

NOTE

A shunt capacitor with a range of 10 nF must be added on the oscillator output to reject high harmonics and shape the signal to be close to a sinusoidal waveform.

TI recommends using only a dedicated LDO to feed the oscillator. Do not use the same VIO for the oscillator and the CC2564C device.

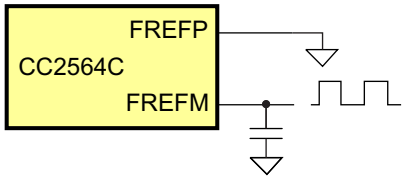

Copyright © 2016, Texas Instruments Incorporated

Figure 6-2. Clock Configuration (Square Wave, DC-Coupled)

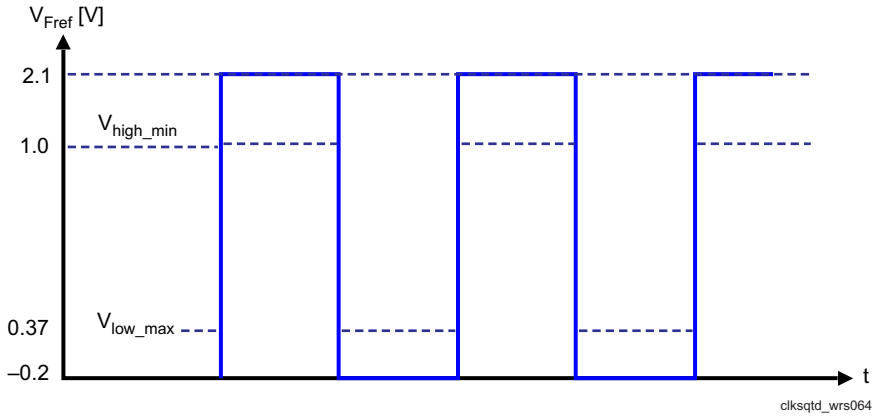

Figure 6-3. External Fast Clock (Square Wave, DC-Coupled)

Figure 6-4 and Figure 6-5 show the clock configuration when using a sine wave, DC-coupled external source for the fast clock input.

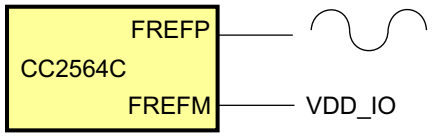

Copyright © 2016, Texas Instruments Incorporated

Figure 6-4. Clock Configuration (Sine Wave, DC-Coupled)

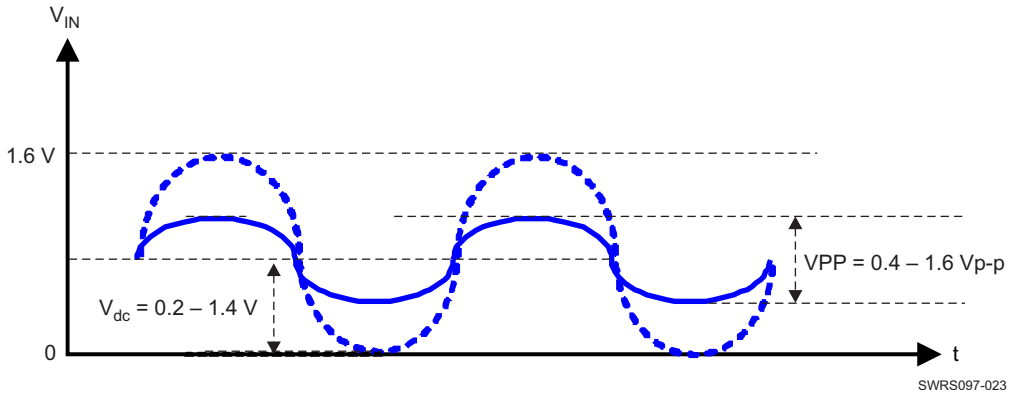

Figure 6-5. External Fast Clock (Sine Wave, DC-Coupled)

6.3.2.2 External F_{REF} Sine Wave, AC-Coupled

Figure 6-6 and Figure 6-7 show the configuration when using a sine wave, AC-coupled external source for the fast-clock input.

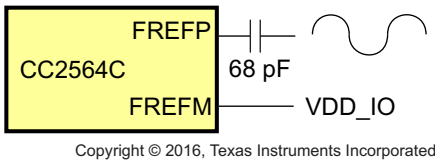

Figure 6-6. Clock Configuration (Sine Wave, AC-Coupled)

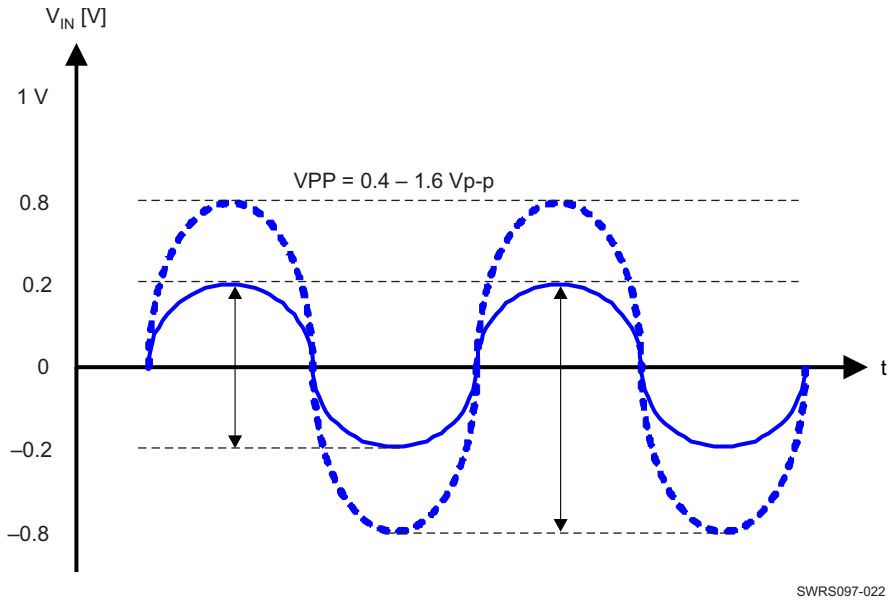

Figure 6-7. External Fast Clock (Sine Wave, AC-Coupled)

In cases where the input amplitude is greater than 1.6 V_{p-p}, the amplitude can be reduced to within limits. Using a small series capacitor forms a voltage divider with the internal input capacitance of approximately 2 pF to provide the required amplitude at the device input.

Copyright © 2016–2020, Texas Instruments Incorporated

6.3.2.3 Fast Clock Using External Crystal

The CC2564C device incorporates an internal crystal oscillator buffer to support a crystal-based fast-clock scheme. The supported crystal frequencies are 26 and 38.4 MHz.

The frequency accuracy of the fast-clock source must not exceed ±20 ppm (including the accuracy of the capacitors, as specified in the Bluetooth specification).

Figure 6-8 shows the recommended fast-clock circuitry.

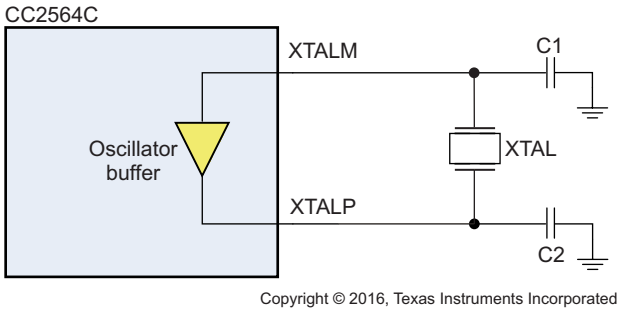

Copyright © 2016, Texas Instruments Incorporated

Figure 6-8. Fast-Clock Crystal Circuit

Table 6-1 lists component values for the fast-clock crystal circuit.

Table 6-1. Fast-Clock Crystal Circuit Component Values

FREQ (MHz)	C1 (pF)(1)	C2 (pF)(1)
26	12	12

(1) To achieve the required accuracy, values for C1 and C2 must be taken from the crystal manufacturer's data sheet and layout considerations.

6.4 Functional Blocks

6.4.1 RF

TheCC2564C device is the third generation of Bluetooth single-chip devices using DRP architecture from TI. Modifications and new features added to the DRP further improve radio performance.

Figure 6-9 shows the DRP block diagram.

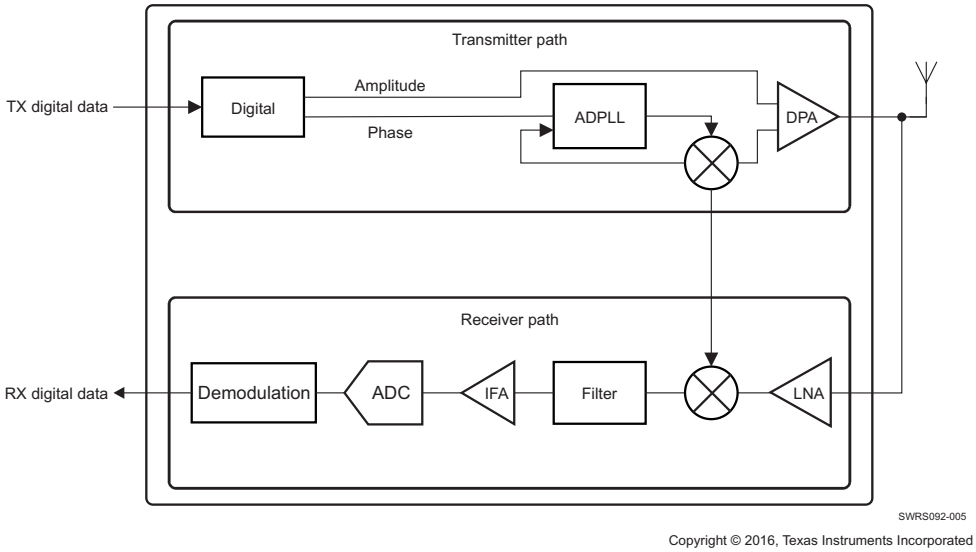

Copyright © 2016, Texas Instruments Incorporated

Figure 6-9. DRP Block Diagram

6.4.1.1 Receiver

The receiver uses near-zero-IF architecture to convert the RF signal to baseband data. The signal received from the external antenna is input to a single-ended low-noise amplifier (LNA) and passed to a mixer that downconverts the signal to IF, followed by a filter and amplifier. The signal is then quantized by a sigma-delta analog-to-digital converter (ADC) and further processed to reduce the interference level.

The demodulator digitally downconverts the signal to zero-IF and recovers the data stream using an adaptive-decision mechanism. The demodulator includes EDR processing with:

- State-of-the-art performance
- A maximum-likelihood sequence estimator (MLSE) to improve the performance of basic-rate GFSK sensitivity
- Adaptive equalization to enhance EDR modulation

New features include:

- LNA input range narrowed to increase blocking performance
- Active spur cancellation to increase robustness to spurs

Copyright © 2016–2020, Texas Instruments Incorporated

6.4.1.2 Transmitter

The transmitter is an all-digital, sigma-delta phase-locked loop (ADPLL) based with a digitally controlled oscillator (DCO) at 2.4 GHz as the RF clock. The transmitter directly modulates the digital PLL. The power amplifier is also digitally controlled. The transmitter uses the polar-modulation technique. While the phase-modulated control word is fed to the ADPLL, the amplitude-modulated controlled word is fed to the class-E amplifier to generate a Bluetooth standard-compliant RF signal.

New features include:

- Improved TX output power
- LMS algorithm to improve the differential error vector magnitude (DEVM)

6.4.2 Host Controller Interface

The CC2564C device incorporates one UART module dedicated to the HCI transport layer. The HCI transports commands, events, and ACL between the device and the host using HCI data packets.

The CC2564C device supports the H4 protocol (4-wire UART) with hardware flow control and the H5 protocol (3-wire UART) with software flow control. The CC2564C device automatically detects the protocol on reception of the first command.

The maximum baud rate of the UART module is 4 Mbps; however, the default baud rate after power up is set to 115.2 kbps. The baud rate can thereafter be changed with a VS command. The device responds with a command complete event (still at 115.2 kbps), after which the baud rate change occurs.

The UART module includes the following features:

- Receiver detection of break, idle, framing, FIFO overflow, and parity error conditions
- Transmitter underflow detection
- CTS and RTS hardware flow control (H4 protocol)
- XON and XOFF software flow control (H5 protocol)

Table 6-2 lists the UART module default settings.

Table 6-2. UART Module Default Settings

PARAMETER	VALUE
Bit rate	115.2 kbps
Data length	8 bits
Stop bit	1
Parity	None

Copyright © 2016–2020, Texas Instruments Incorporated

6.4.2.1 4-Wire UART Interface—H4 Protocol

The H4 UART Interface includes four signals:

- TX
- RX
- CTS
- RTS

Flow control between the host and the CC2564C device is bytewise by hardware.

Figure 6-10 shows the H4 UART interface.

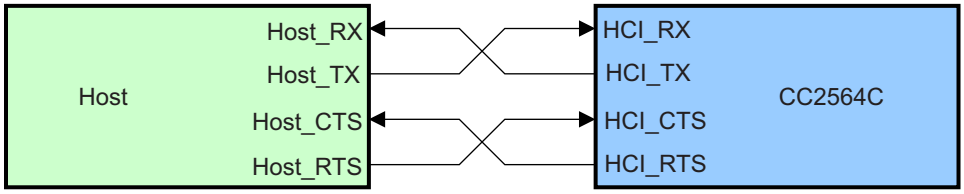

Copyright © 2016, Texas Instruments Incorporated

Figure 6-10. H4 UART Interface

When the UART RX buffer of the device passes the flow control threshold, it sets the HCI_RTS signal high to stop transmission from the host.

When the HCI_CTS signal is set high, the device stops transmission on the interface. If HCI_CTS is set high while transmitting a byte, the device finishes transmitting the byte and stops the transmission.

The H4 protocol device includes a mechanism that handles the transition between active mode and sleep mode. The protocol occurs through the CTS and RTS UART lines and is known as the enhanced HCI low level (eHCILL) power-management protocol.

For more information on the H4 UART protocol, see *Volume 4 Host Controller Interface, Part A UART Transport Layer of the Bluetooth Core Specifications* (www.bluetooth.org/en-us/specification/adoptedspecifications).

Copyright © 2016–2020, Texas Instruments Incorporated

6.4.2.2 3-Wire UART Interface—H5 Protocol

The H5 UART interface consists of three signals (see Figure 6-11):

- TX
- RX
- GND

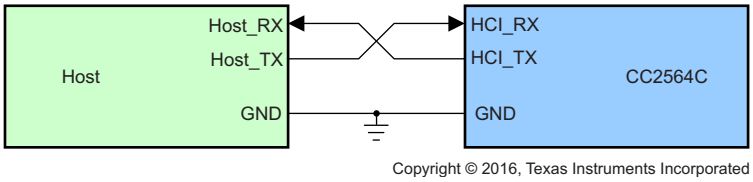

Copyright © 2016, Texas Instruments Incorporated

Figure 6-11. H5 UART Interface

The H5 protocol supports the following features:

- Software flow control (XON/XOFF)
- Power management using the software messages:
  - WAKEUP
  - WOKEN
  - SLEEP
- CRC data integrity check

For more information on the H5 UART protocol, see *Volume 4 Host Controller Interface, Part D Three-Wire UART Transport Layer of the Bluetooth Core Specifications* (www.bluetooth.org/en-us/specification/adoptedspecifications).

6.4.3 Digital Codec Interface

The codec interface is a fully programmable port to support seamless interfacing with different PCM and I2S codec devices. The interface includes the following features:

- Two voice channels
- Master and slave modes
- All voice coding schemes defined by the Bluetooth specification: linear, A-Law, and μ-Law
- Long and short frames
- Different data sizes, order, and positions
- High flexibility to support a variety of codecs
- Bus sharing: Data_Out is in the Hi-Z state when the interface is not transmitting voice data.

6.4.3.1 Hardware Interface

The interface includes four signals:

- Clock: configurable direction (input or output)
- Frame_Sync and Word_Sync: configurable direction (input or output)
- Data_In: input
- Data_Out: output or tri-state signal

The CC2564C device can be the master of the interface when generating the Clock and Frame_Sync signals or the slave when receiving these two signals.

For slave mode, clock input frequencies of up to 15 MHz are supported. At clock rates above 12 MHz, the maximum data burst size is 32 bits.

For master mode, the device can generate any clock frequency from 64 kHz to 4.096 MHz.

6.4.3.2 I2S

When the codec interface is configured to support the I2S protocol, these settings are recommended:

- Bidirectional, full-duplex interface
- Two time slots per frame: time slot 0 for the left channel audio data; and time slot 1 for the right channel audio data
- The length of each time slot is configurable up to 40 serial clock cycles, and the length of the frame is configurable up to 80 serial clock cycles

6.4.3.3 Data Format

The data format is fully configurable:

- The data length can be from 8 to 320 bits in 1-bit increments when working with 2 channels, or up to 640 bits when working with 1 channel. The data length can be set independently for each channel.
- The data position within a frame is also configurable within 1 clock (bit) resolution and can be set independently (relative to the edge of the Frame_Sync signal) for each channel.
- The Data_In and Data_Out bit order can be configured independently. For example; Data_In can start with the most significant bit (MSB); Data_Out can start with the least significant bit (LSB). Each channel is separately configurable. The inverse bit order (that is, LSB first) is supported only for sample sizes up to 24 bits.
- Data_In and Data_Out are not required to be the same length.
- The Data_Out line is configured to Hi-Z output between data words. Data_Out can also be set for permanent Hi-Z output, regardless of the data output. This configuration allows the device to be a bus slave in a multislave PCM environment. At power up, Data_Out is configured as Hi-Z output.

6.4.3.4 Frame-Idle Period

The codec interface handles frame-idle periods, during which the clock pauses and becomes 0 at the end of the frame after all data are transferred.

The device supports frame-idle periods both as master and slave of the codec bus.

When the device is the master of the interface, the frame-idle period is configurable. There are two configurable parameters:

- Clk_Idle_Start: indicates the number of clock cycles from the beginning of the frame to the beginning of the frame-idle period. After Clk_Idle_Start clock cycles, the clock becomes 0.
- Clk_Idle_End: indicates the time from the beginning of the frame to the end of the frame-idle period. The time is given in multiples of clock periods.

The delta between Clk_Idle_Start and Clk_Idle_End is the clock idle period.

For example, for clock rate = 1 MHz, frame sync period = 10 kHz, Clk_Idle_Start = 60, Clk_Idle_End = 90.

Copyright © 2016–2020, Texas Instruments Incorporated

Between both Frame_Sync signals there are 70 clock cycles (instead of 100). The clock idle period starts 60 clock cycles after the beginning of the frame and lasts 90 – 60 = 30 clock cycles. Thus, the idle period ends 100 – 90 = 10 clock cycles before the end of the frame. The data transmission must end before the beginning of the idle period.

Figure 6-12 shows the frame idle timing.

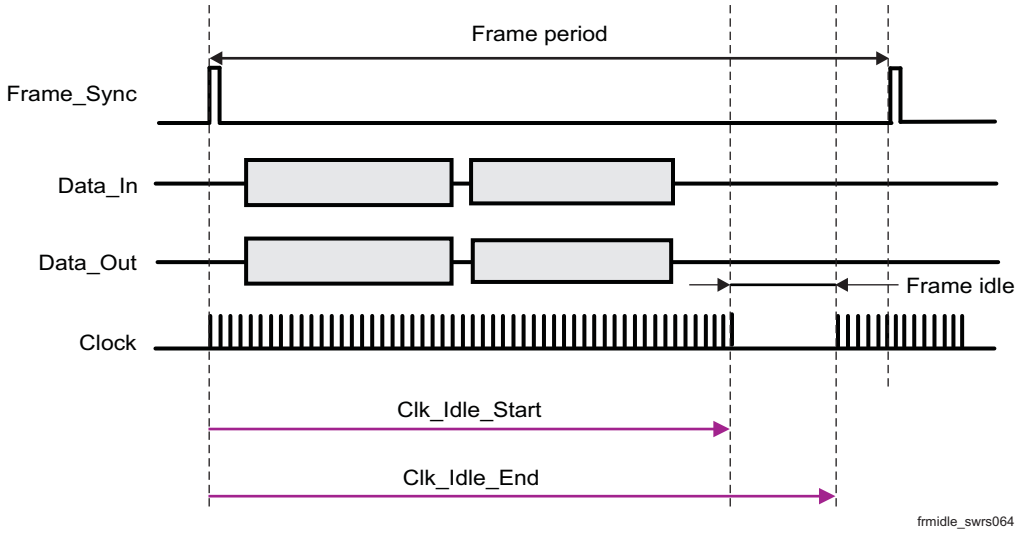

Figure 6-12. Frame Idle Period

6.4.3.5 Clock-Edge Operation

The codec interface of the device can work on the rising or the falling edge of the clock and can sample the Frame_Sync signal and the data at inversed polarity.

Figure 6-13 shows the operation of a falling-edge-clock type of codec. The codec is the master of the bus. The Frame_Sync signal is updated (by the codec) on the falling edge of the clock and is therefore sampled (by the device) on the next rising clock. The data from the codec is sampled (by the device) on the falling edge of the clock.

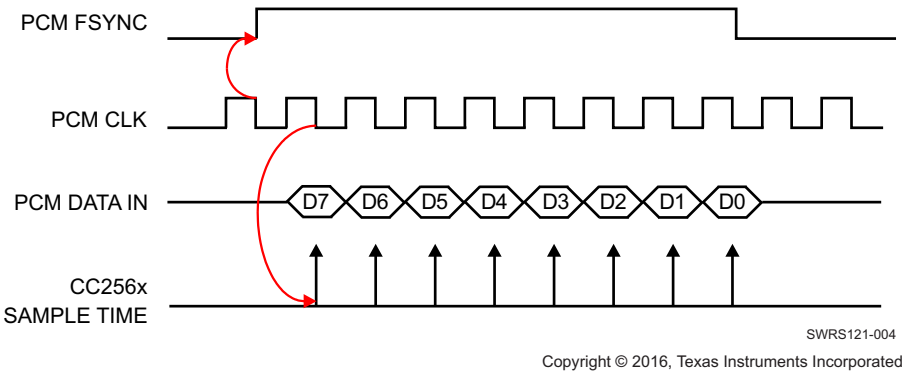

Copyright © 2016, Texas Instruments Incorporated

Figure 6-13. Negative Clock Edge Operation

6.4.3.6 Two-Channel Bus Example

Figure 6-14 shows a 2-channel bus in which the two channels have different word sizes and arbitrary positions in the bus frame.

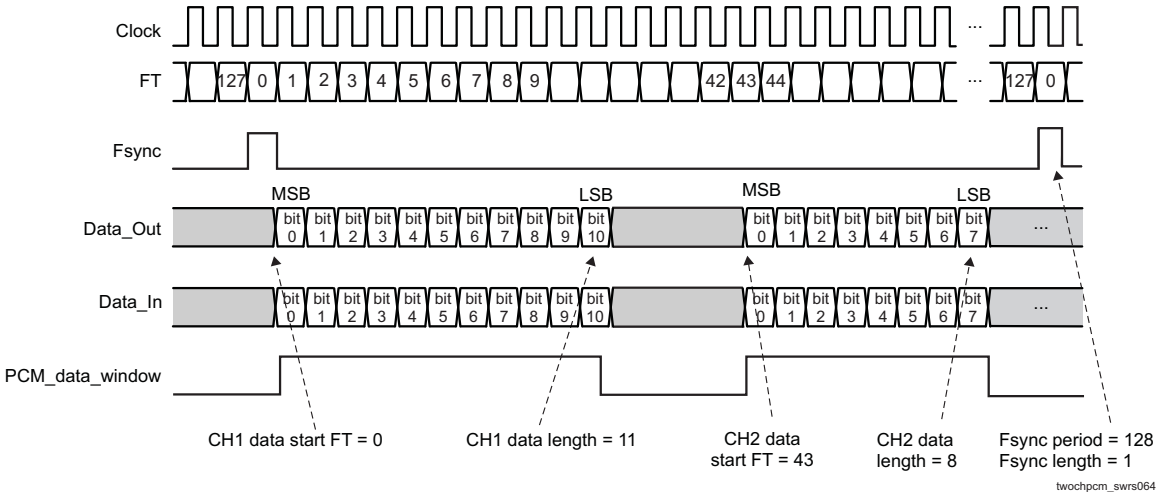

NOTE: FT stands for frame timer.

Figure 6-14. 2-Channel Bus Timing

Copyright © 2016–2020, Texas Instruments Incorporated

6.4.4 Assisted Modes

The CC2564C device contains an embedded coprocessor that can be used for multiple purposes (see Section 1.4). The CC2564C device uses the coprocessor to perform the LE functionality or to execute the assisted HFP 1.6 (WBS) or assisted A2DP functions. Only one of these functions can be executed at a time because they all use the same resources (that is, the coprocessor; see Table 3-1 for the modes of operation supported by each device).

This section describes the assisted HFP 1.6 (WBS) and assisted A2DP modes of operation. These modes of operation minimize host processing and power by taking advantage of the device coprocessor to perform the voice and audio SBC processing required in HFP 1.6 (WBS) and A2DP profiles. This section also compares the architecture of the assisted modes with the common implementation of the HFP 1.6 and A2DP profiles.

The assisted HFP 1.6 (WBS) and assisted A2DP modes of operation comply fully with the HFP 1.6 and A2DP Bluetooth specifications. For more information on these profiles, see the corresponding Bluetooth Profile Specification (www.bluetooth.org/en-us/specification/adopted-specifications).

6.4.4.1 Assisted HFP 1.6 (WBS)

The *HFP 1.6 Profile Specification* adds the requirement for WBS support. The WBS feature allows twice the voice quality versus legacy voice coding schemes at the same air bandwidth (64 kbps). This feature is achieved using a voice sampling rate of 16 kHz, a modified subband coding (mSBC) scheme, and a packet loss concealment (PLC) algorithm. The mSBC scheme is a modified version of the mandatory audio coding scheme used in the A2DP profile with the parameters listed in Table 6-3.

Table 6-3. mSBC Parameters

PARAMETER	VALUE
Channel mode	Mono
Sampling rate	16 kHz
Allocation method	Loudness
Subbands	8
Block length	15
Bitpool	26

The assisted HFP 1.6 mode of operation implements this WBS feature on the embedded CC2564C coprocessor. That is, the mSBC voice coding scheme and the PLC algorithm are executed in the CC2564C coprocessor rather than in the host, thus minimizing host processing and power. One WBS connection at a time is supported, and WBS and NBS connections cannot be used simultaneously in this mode of operation. Figure 6-15 shows the architecture comparison between the common implementation of the HFP 1.6 profile and the assisted HFP 1.6 solution.

Copyright © 2016–2020, Texas Instruments Incorporated

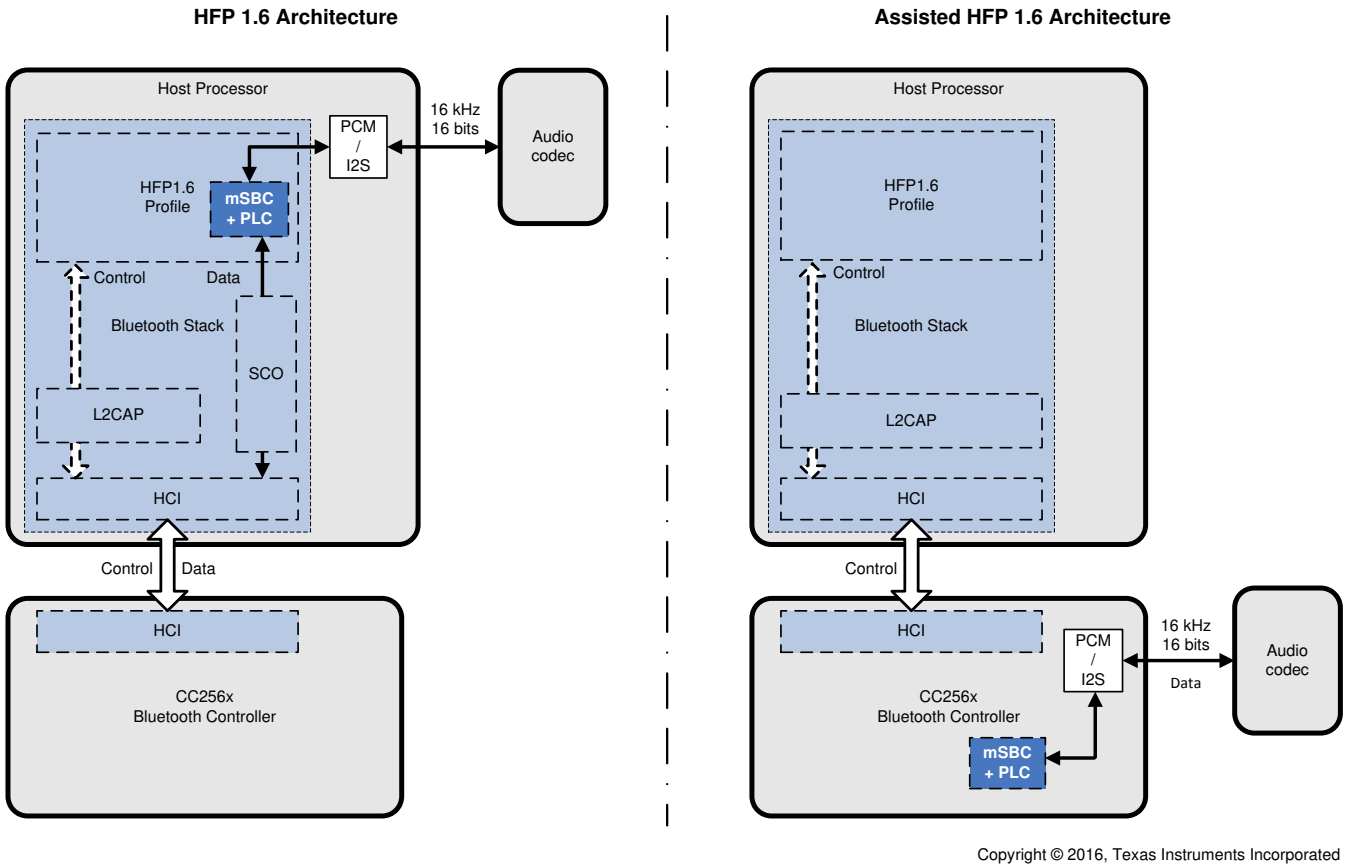

Figure 6-15. HFP 1.6 Architecture Versus Assisted HFP 1.6 Architecture

For detailed information on the HFP 1.6 profile, see the *Hands-Free Profile 1.6 Specification* (www.bluetooth.org/en-us/specification/adopted-specifications).

6.4.4.2 Assisted A2DP

The advanced audio distribution profile (A2DP) enables wireless transmission of high-quality mono or stereo audio between two devices. A2DP defines two roles:

- A2DP source is the transmitter of the audio stream.
- A2DP sink is the receiver of the audio stream.

A typical use case streams music from a tablet, phone, or PC (the A2DP source) to headphones or speakers (the A2DP sink). This section describes the architecture of these roles and compares them with the corresponding assisted-A2DP architecture. To use the air bandwidth efficiently, the audio data must be compressed in a proper format. The A2DP mandates support of the SBC scheme. Other audio coding algorithms can be used; however, both Bluetooth devices must support the same coding scheme. SBC is the only coding scheme spread out in all A2DP Bluetooth devices; thus, it is the only coding scheme supported in the assisted A2DP modes. Table 6-4 lists the recommended parameters for the SBC scheme in the assisted A2DP modes.

Copyright © 2016–2020, Texas Instruments Incorporated

Table 6-4. Recommended Parameters for the SBC Scheme in Assisted A2DP Modes

SBC ENCODER SETTINGS(1)	MID QUALITY				HIGH QUALITY			
	MONO		JOINT STEREO		MONO		JOINT STEREO	
Sampling frequency (kHz)	44.1	48	44.1	48	44.1	48	44.1	48
Bitpool value	19	18	35	33	31	29	53	51
Resulting frame length (bytes)	46	44	83	79	70	66	119	115
Resulting bit rate (Kbps)	127	132	229	237	193	198	328	345

(1) Other settings: Block length = 16; allocation method = loudness; subbands = 8.

The SBC scheme supports a wide variety of configurations to adjust the audio quality. Table 6-5 through Table 6-12 list the supported SBC capabilities in the assisted A2DP modes.

Table 6-5. Channel Modes

CHANNEL MODE	STATUS
Mono	Supported
Dual channel	Supported
Stereo	Supported
Joint stereo	Supported

Table 6-6. Sampling Frequency

SAMPLING FREQUENCY (kHz)	STATUS
16	Supported
44.1	Supported
48	Supported

Table 6-7. Block Length

BLOCK LENGTH	STATUS
4	Supported
8	Supported
12	Supported
16	Supported

Table 6-8. Subbands

SUBBANDS	STATUS
4	Supported
8	Supported

Copyright © 2016–2020, Texas Instruments Incorporated

Table 6-9. Allocation Method

ALLOCATION METHOD	STATUS
SNR	Supported
Loudness	Supported

Table 6-10. Bitpool Values

BITPOOL RANGE	STATUS
Assisted A2DP sink: 2–54	Supported
Assisted A2DP source: 2–57	Supported

Table 6-11. L2CAP MTU Size

L2CAP MTU SIZE (BYTES)	STATUS
Assisted A2DP sink: 260–800	Supported
Assisted A2DP source: 260–1021	Supported

Table 6-12. Miscellaneous Parameters

ITEM	VALUE	STATUS
A2DP content protection	Protected	Not supported
AVDTP service	Basic type	Supported
L2CAP mode	Basic mode	Supported
L2CAP flush	Nonflushable	Supported

For detailed information on the A2DP profile, see the *A2DP Profile Specification* at Adopted Bluetooth Core Specifications.

Copyright © 2016–2020, Texas Instruments Incorporated

6.4.4.2.1 Assisted A2DP Sink

The role of the A2DP sink is to receive the audio stream in an A2DP Bluetooth connection. In this role, the A2DP layer and its underlying layers are responsible for link management and data decoding. To handle these tasks, two logic transports are defined:

- Control and signaling logic transport
- Data packet logic transport

The assisted A2DP takes advantage of this modularity to handle the data packet logic transport in the CC2564C device. First, the assisted A2DP implements a light L2CAP layer (L-L2CAP) and light AVDTP layer (L-AVDTP) to defragment the packets. Then the assisted A2DP performs the SBC decoding on-chip to deliver raw audio data through the device PCM–I2S interface. Figure 6-16 shows the comparison between a common A2DP sink architecture and the assisted A2DP sink architecture.

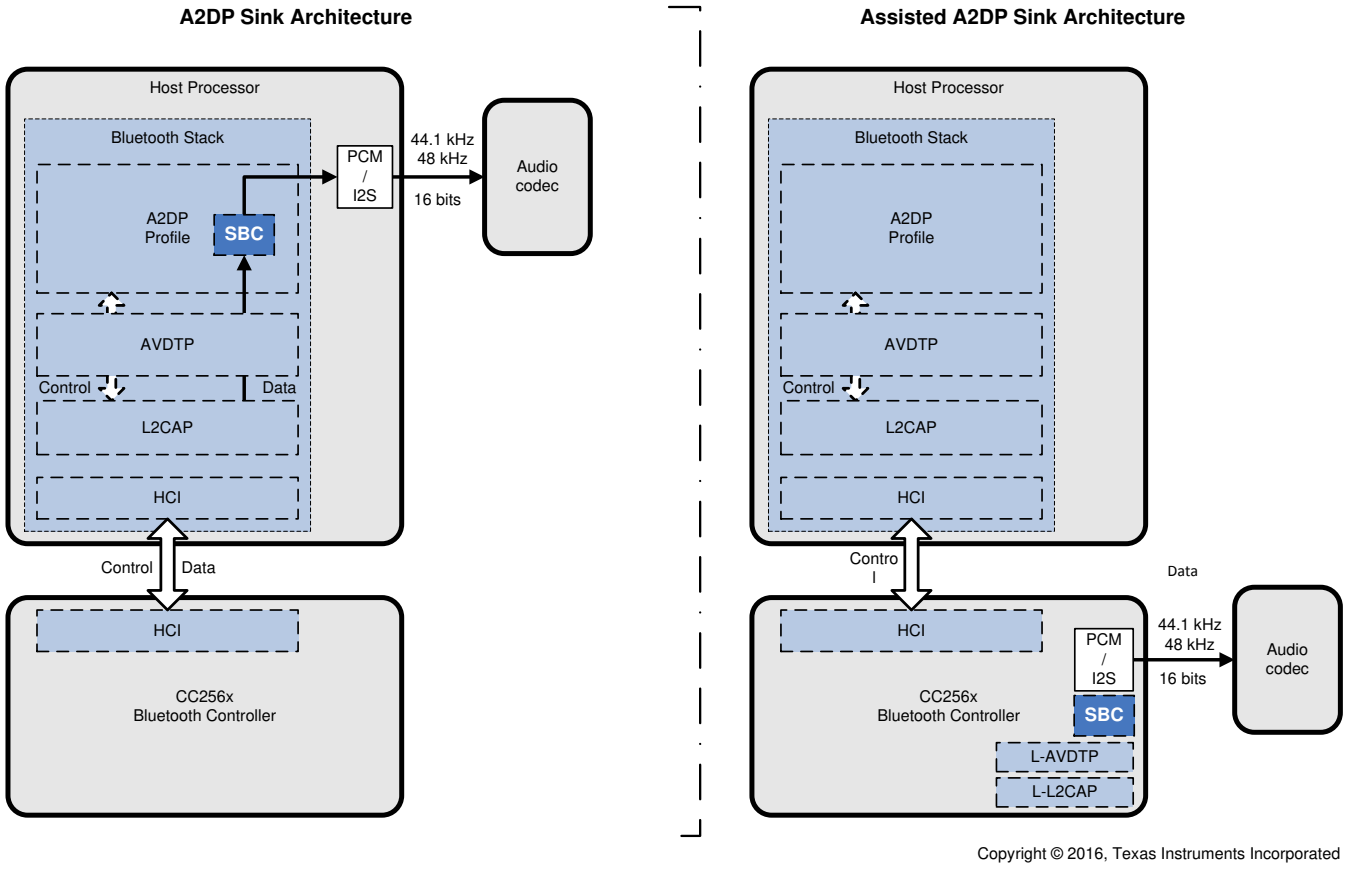

Figure 6-16. A2DP Sink Architecture Versus Assisted A2DP Sink Architecture

For more information on the A2DP sink role, see the *A2DP Profile Specification* at Adopted Bluetooth Core Specifications.

6.4.4.2.2 Assisted A2DP Source

The role of the A2DP source is to transmit the audio stream in an A2DP Bluetooth connection. In this role, the A2DP layer and its underlying layers are responsible for link management and data encoding. To handle these tasks, two logic transports are defined:

- Control and signaling logic transport
- Data packet logic transport

The assisted A2DP takes advantage of this modularity to handle the data packet logic transport in the CC2564C device. First, the assisted A2DP encodes the raw data from the CC2564C PCM–I2S interface using an on-chip SBC encoder. Then the assisted A2DP implements an L-L2CAP layer and an L-AVDTP layer to fragment and packetize the encoded audio data. Figure 6-17 shows the comparison between a common A2DP source architecture and the assisted A2DP source architecture.

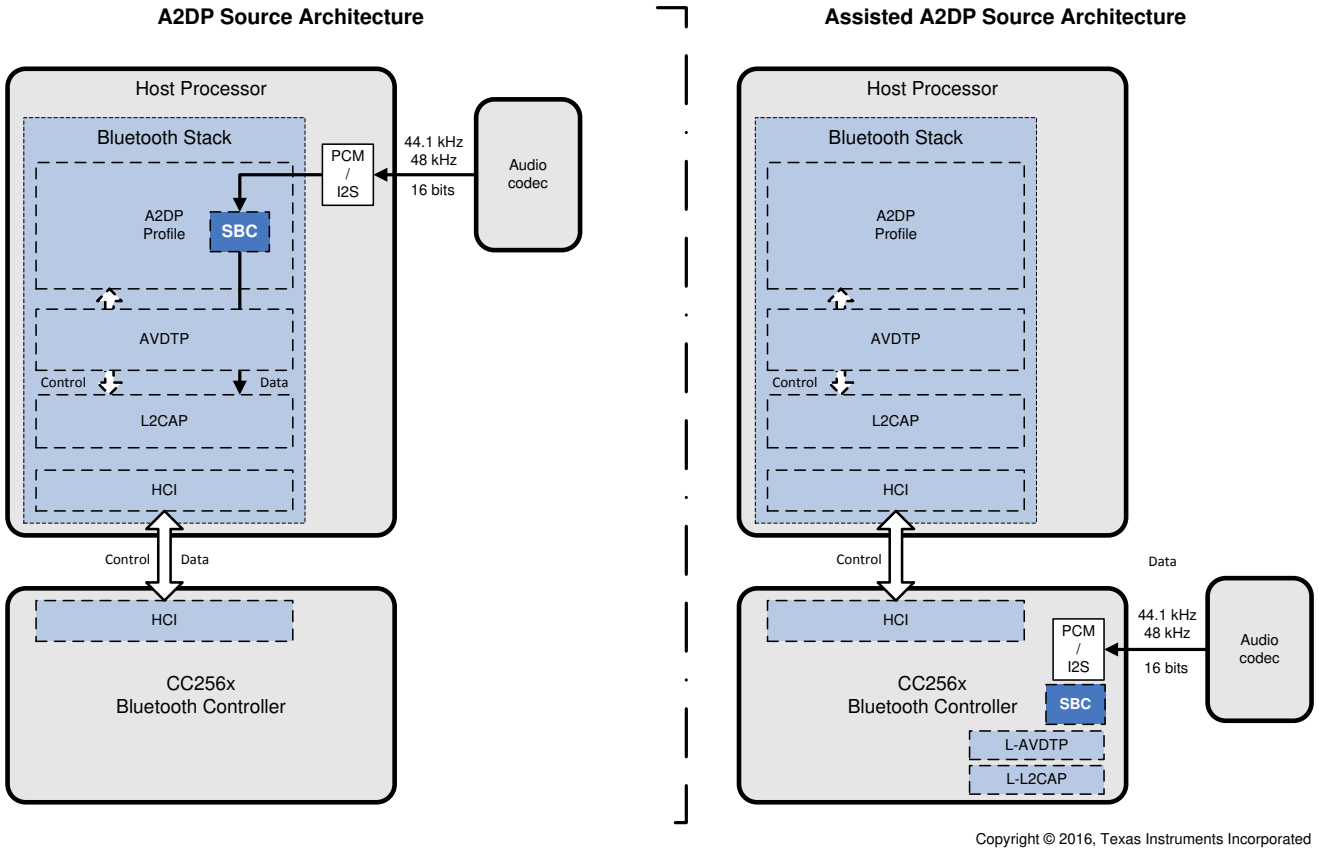

Copyright © 2016, Texas Instruments Incorporated

Figure 6-17. A2DP Source Architecture Versus Assisted A2DP Source Architecture

For more information on the A2DP source role, see the A2DP Profile Specification at Adopted Bluetooth Core Specifications.

Copyright © 2016–2020, Texas Instruments Incorporated

6.5 Bluetooth BR and EDR Features

The CC2564C device complies with the *Bluetooth* 5.1 specification up to the HCI layer (for family members and technology supported, see Table 3-1):

- Up to seven active devices
- Scatternet: Up to three piconets simultaneously, one as master and two as slaves
- Up to two SCO links on the same piconet
- Very fast AFH algorithm for asynchronous connection-oriented link (ACL) and eSCO link
- Supports typical 12-dBm TX power without an external power amplifier (PA), thus improving Bluetooth link robustness
- DRP single-ended 50-Ω I/O for easy RF interfacing
- Internal temperature detection and compensation to ensure minimal variation in RF performance over temperature
- Includes a 128-bit hardware encryption accelerator as defined by the Bluetooth specifications
- Flexible PCM and I2S digital codec interface:
  - Full flexibility of data format (linear, A-Law, µ-Law)
  - Data width
  - Data order
  - Sampling
  - Slot positioning
  - Master and slave modes
  - High clock rates up to 15 MHz for slave mode (or 4.096 MHz for master mode)
- Support for all voice air-coding
  - CVSD
  - A-Law
  - µ-Law
  - Transparent (uncoded)
  - mSBC
- The CC2564C device provides an assisted mode for the HFP 1.6 (wideband speech [WBS]) profile or A2DP profile to reduce host processing and power.

6.6 Bluetooth Low Energy Description

The CC2564C device complies with the Bluetooth 5.1 specification up to the HCI layer (for the family members and technology supported, see Table 3-1):

- Solution optimized for proximity and sports use cases
- Supports up to 10 simultaneous connections
- Multiple sniff instances that are tightly coupled to achieve minimum power consumption
- Independent buffering for low energy, allowing large numbers of multiple connections without affecting BR or EDR performance
- Built-in coexistence and prioritization handling

NOTE

The assisted modes (HFP 1.6 and A2DP) are not available when Bluetooth low energy is enabled.

Copyright © 2016–2020, Texas Instruments Incorporated

6.7 Bluetooth Transport Layers

Figure 6-18 shows the Bluetooth transport layers.

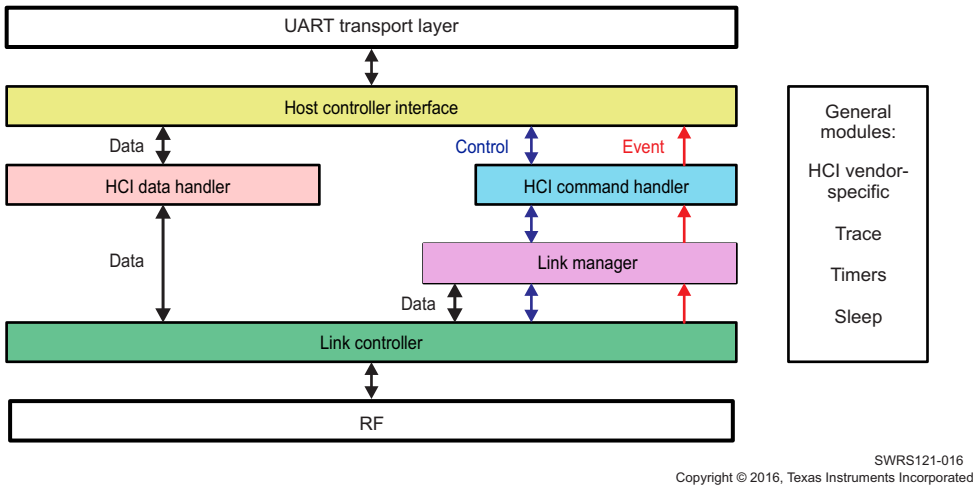

Copyright © 2016, Texas Instruments Incorporated

Figure 6-18. Bluetooth Transport Layers

6.8 Changes from the CC2564B Device to the CC2564C Device

The CC2564C device includes the following changes:

- Support added for standard HCI command for WBS to replace HCI VS command sequence
  - Part of the Core Specification Addendum 2 (CSA2)
- Easy PCM interface integration when using both WBS (16 kHz) and NBS (8 kHz)
- PLC support added for NBS (8 kHz) when working at 16-kHz PCM clock
- Option added to start and stop the PCM clock as master on the PCM bus even when voice call is not active or set a timer to extend the clock after voice or audio is removed
- Link layer topology support—Acts concurrently as peripheral and central low-energy device
- AFH algorithm enhancements—Improvements to the automatic frequency hopping algorithms

Copyright © 2016–2020, Texas Instruments Incorporated

7 Applications, Implementation, and Layout

NOTE

Information in the following Applications section is not part of the TI component specification, and TI does not warrant its accuracy or completeness. TI's customers are responsible for determining suitability of components for their purposes. Customers should validate and test their design implementation to confirm system functionality.

7.1 Reference Design Schematics and BOM

7.1.1 VQFNP-MR Schematic and BOM

Figure 7-1 shows the reference schematics for the VQFNP-MR package. For complete schematics and PCB layout guidelines, contact your TI representative.

Copyright © 2016–2020, Texas Instruments Incorporated

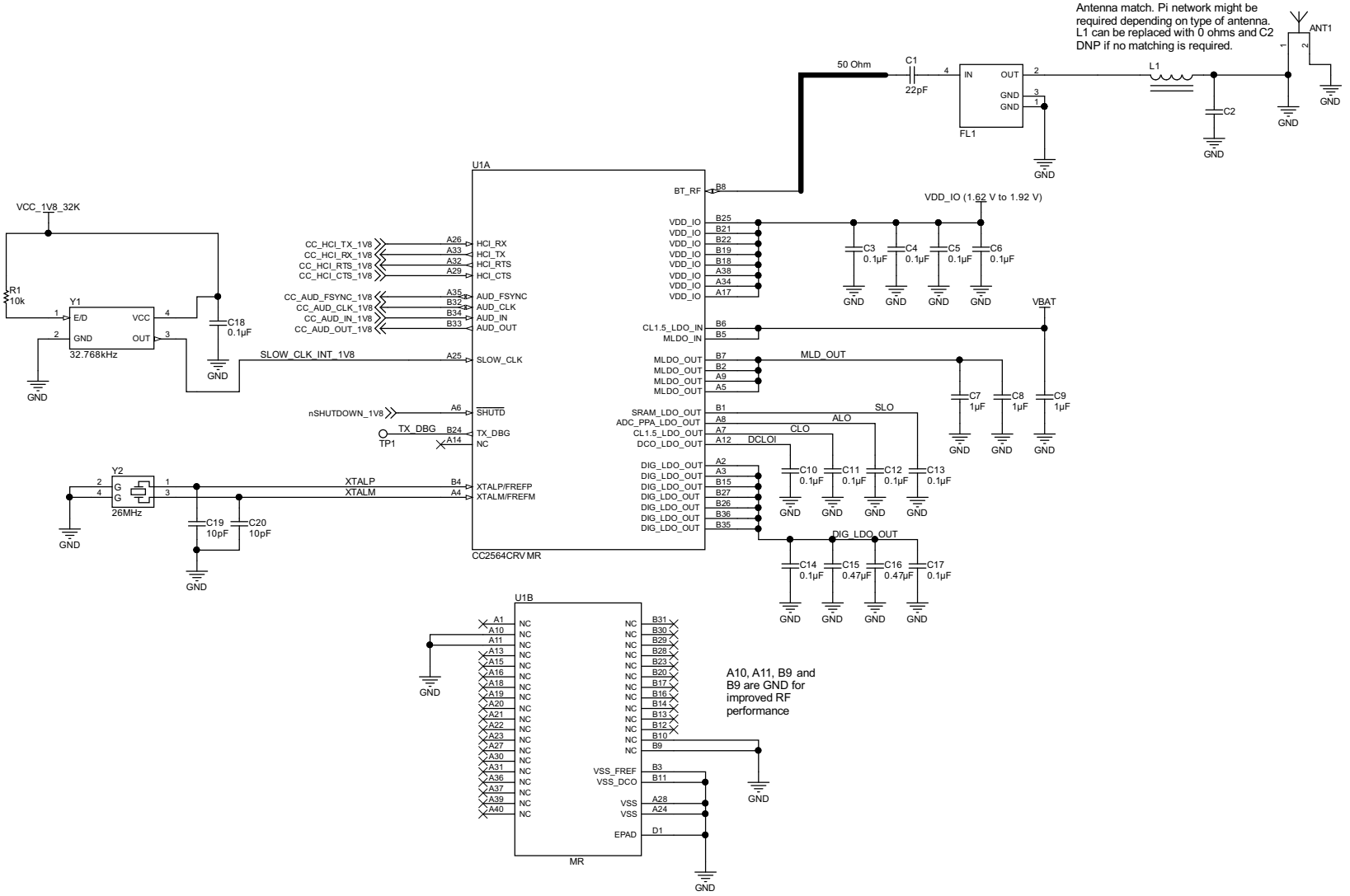

Copyright © 2017, Texas Instruments Incorporated

Figure 7-1. Reference Schematics

Table 7-1 lists the BOM for the VQFNP-MR package.

Table 7-1. Bill of Materials

QUANTITY	REFERENCE DESIGNATOR	VALUE	DESCRIPTION	MANUFACTURER	MANUFACTURER PART NUMBER
1	ANT1	2.45-GHz Antenna	ANT_IIFA_CC2420_32mil_MIR	N/A	IIFA_CC2420
1	C1	22 pF	CAP, CERM, 22 pF, 50 V, ±5%, C0G/NP0, 0402	TDK	C1005C0G1H220J050BA
0 - DNP	C2	0.5 pF	CAP, CERM, 0.5 pF, 50 V, ±10%, C0G/NP0, 0402	MuRata	GRM1555C1HR50WA01
11	C3, C4, C5, C6, C10, C11, C12, C13, C14, C17, C18	0.1 µF	"Capacitor, ceramic; 0.1-µF 6.3-V 10% X7R 0402"	Kemet	C0402C104K9RACTU
3	C7, C8, C9	1 µF	"Capacitor, ceramic; 1.0-µF 6.3-V 10% X5R 0402"	Taiyo Yuden	JMK105BJ105KV-F
2	C15, C16	0.47 µF	"Capacitor, ceramic; 0.47-µF 6.3-V X5R ±10% 0402"	Taiyo Yuden	JMK105BJ474KV-F
2	C19, C20	10 pF	CAP, CERM, 10 pF, 50 V, ±5%, C0G/NP0, 0402	MuRata	GRM1555C1H100JA01D
1	FL1	2.45-GHz Center	Multilayer Band Pass Filter, SMD	MuRata	LFB212G45SG8C341
1	L1	0 Ω	RES, 0, 5%, 0.063 W, 0402	Vishay-Dale	CRCW04020000Z0ED
1	R1	10k	RES, 10 k, 5%, 0.063 W, 0402	Vishay-Dale	CRCW040210K0JNED
1	U1	CC2564CRVM	CC2564C dual-mode Bluetooth controller	Texas Instruments	CC2564CRVM
1	Y1	XO Oscillator	XO Oscillator, 32.768 kHz, CMOS, 3.3 V, SMD	Abracon Corporation	ASH7K-32.768KHZ-T
1	Y2	Crystal	Crystal, 26 MHz, 8 pF, SMD	NDK	NX2016SA-26.000M-STD-CZS-2

Copyright © 2016–2020, Texas Instruments Incorporated

7.2 VQFNP-MR PCB Layout Guidelines

This section describes the PCB guidelines to speed up the PCB design using the CC256x VQFNP-MR device. Following these guidelines ensures that the design will pass Bluetooth SIG certification and also minimizes risk for regulatory certifications including FCC, ETSI, and CE. For more information, see *CC256x QFN PCB Guidelines*.

7.2.1 Power Supply Guidelines

Guidelines for the power supply follow:

- The trace width must be at least 10 mils for the VBAT and VIO traces.
- The length of the traces must be as short as possible (pin to pin).
- Decoupling capacitors must be as close as possible to the QFN device:
  - The MLDO_IN capacitor must be close to pin B5.
  - The VDD_IO capacitor must be close to pins B18 and A17.

Guidelines for the LDOs follow:

- The trace width for the trace between x_LDO_x pins and decoupling capacitors is at least 5 mils; where possible, the recommended trace width is 10 mils.
- Place the decoupling capacitor of MLDO_OUT (C20) as close as possible to pin A5.
- These capacitors must close to the following pins:
  - The DIG_LDO_OUT capacitor must be close to ball B15.
  - The DIG_LDO_OUT capacitor must be close to ball B27.
  - The DIG_LDO_OUT capacitor must be close to ball B36.
- The DIG_LDO_OUT capacitor connected to ball B36 must be isolated from the top layer GND (see the *Low-Dropout Capacitors* section in *CC256x QFN PCB Guidelines*).
- The decoupling capacitors for SRAM, ADCPPA, and CL1.5 LDO_OUT must be as close as possible to their corresponding pins on the CC256x device.
- Place the device and capacitors together on the top side.
- The ground connection of each capacitor must be directly connected to solid ground layer (layer 2).
- The capacitor that is directly connected to pin A12 should be close to the device.
- Connect the DCO_LDO_OUT capacitor isolated from layer 1 ground directly to layer 2 solid ground.

Guidelines for the ground layer follow:

- Layer 2 must be a solid ground plane.
- Isolate VSS_FREF from ground on the top layer and route it directly to ground on the second layer (see the *Key VSS Ball* section in *CC256x QFN PCB Guidelines*).
- Isolate VSS_DCO (ball B11) from ground. Include VSS_DCO in the illustration of the DCO_LDO_OUT capacitor (see the *DCO_LDO_OUT* section in *CC256x QFN PCB Guidelines*).
- A minimum of 13 vias on the thermal pad are required to increase ground coupling.
- Connect VSS_FREF (ball B3) directly to solid ground, not to the thermal pad.

Copyright © 2016–2020, Texas Instruments Incorporated

7.2.2 User Interfaces

Guidelines for the UART follow:

- The trace width for the UART must be at least 5 mils.
- Run the four UART lines as a bus interface.
- Determine if clocks, DC supply, or RF traces are not near these UART traces.
- The ground plane on layer 2 is solid below these lines and there is ground around these traces on the top layer.

Guidelines for the PCM follow:

- The trace width for the PCM must be at least 5 mils.
- Run the four PCM lines as a bus interface and approximately the same length.
- Determine if clocks, DC supply, RF traces, and LDO capacitors are not near these PCM traces.
- The ground plane on layer 2 is solid below these lines and there is ground around these traces on the top layer.

Guidelines for TX_DBG follow:

- Check for an accessible test point on the board from TX_DBG pin H2.

7.2.3 Clock Interfaces

Guidelines for the slow clock follow:

- The trace width for the slow clock must be at least 5 mils.
- The signal lines for the slow clock must be as short as possible.
- The ground plane on layer 2 is solid below these lines and there is ground around these traces on the top layer.

Guidelines for the fast clock follow:

- The trace width for the fast clock must be at least 5 mils.
- Ensure that crystal tuning capacitors are close to crystal pads.
- Make both traces (XTALM and XTALP) parallel as much as possible and approximately the same length.
- The ground plane on layer 2 is solid below these lines and there is ground around these traces on the top layer.

Copyright © 2016–2020, Texas Instruments Incorporated

7.2.4 RF Interface

Guidelines for the RF Interface follow:

- TI recommends using an RF shield (not mandatory).
- Verify that RF traces are routed on the top layer and matched at 50 Ω with reference to ground.
- Route the RF line between these NC pins:
  - NC_2 (A10)
  - NC_3 (A11)
  - NC_14 (B9)
  - NC_15 (B10)

  These NC pins are grounded for better RF isolation.

NOTE

These pins are NC at the chip level, but TI recommends grounding them on the PCB layout for better RF isolation.

- Ensure the area underneath the BPF pads is grounded on layer 1 and layer 2.
- Keep RF_IN and RF_OUT of the BPF pads clear of any ground fill (see the *RF Trace* section in *CC256x QFN PCB Guidelines*).
- Follow guidelines specified in the vendor-specific antenna design guides (including placement of antenna).
- Follow guidelines specified in the vendor-specific BPF design guides.
- Verify that the Bluetooth RF trace is a 50-Ω, impedance-controlled trace with reference to solid ground.
- Ensure that the RF trace length is as short as possible.

Copyright © 2016–2020, Texas Instruments Incorporated

8 Device and Documentation Support

TI offers an extensive line of development tools. Tools and software to evaluate the performance of the device, generate code, and develop solutions are listed in the following sections.

8.1 Third-Party Products Disclaimer

TI'S PUBLICATION OF INFORMATION REGARDING THIRD-PARTY PRODUCTS OR SERVICES DOES NOT CONSTITUTE AN ENDORSEMENT REGARDING THE SUITABILITY OF SUCH PRODUCTS OR SERVICES OR A WARRANTY, REPRESENTATION OR ENDORSEMENT OF SUCH PRODUCTS OR SERVICES, EITHER ALONE OR IN COMBINATION WITH ANY TI PRODUCT OR SERVICE.

8.2 Tools and Software

Design Kits and Evaluation Modules

HCI Tester This intuitive, user-friendly TI tool is used to evaluate TI's Bluetooth chips and can be downloaded as a complete package from the TI web site at WILINK-BT_WIFI-WIRELESS_TOOLS. More specifically, the tool is used to configure the properties of the Bluetooth chip through the Service Pack (SP) and also allows testing of RF performance.

Software

TI offers the flexibility to choose from a number of application processors with a royalty-free stack. For more details on the different combinations, see the *CC256x Getting Started Selection Guide*.

For a complete listing of development-support tools, see the TI CC256x wiki. For information on pricing and availability, contact the nearest TI field sales office or authorized distributor.

Copyright © 2016–2020, Texas Instruments Incorporated

8.3 Device Nomenclature

To designate the stages in the product development cycle, TI assigns prefixes to the part numbers of all microprocessors (MPUs) and support tools. Each device has one of three prefixes: X, P, or null (no prefix) (for example, *CC2564CRVMR*). Texas Instruments recommends two of three possible prefix designators for its support tools: TMDX and TMDS. These prefixes represent evolutionary stages of product development from engineering prototypes (TMDX) through fully qualified production devices and tools (TMDS).

Device development evolutionary flow:

X Experimental device that is not necessarily representative of the final device's electrical specifications and may not use production assembly flow.

P Prototype device that is not necessarily the final silicon die and may not necessarily meet final electrical specifications.

null Production version of the silicon die that is fully qualified.

Support tool development evolutionary flow:

TMDX Development-support product that has not yet completed Texas Instruments internal qualification testing.

TMDS Fully-qualified development-support product.

X and P devices and TMDX development-support tools are shipped against the following disclaimer:

"Developmental product is intended for internal evaluation purposes."

Production devices and TMDS development-support tools have been characterized fully, and the quality and reliability of the device have been demonstrated fully. TI's standard warranty applies.

Predictions show that prototype devices (X or P) have a greater failure rate than the standard production devices. Texas Instruments recommends that these devices not be used in any production system because their expected end-use failure rate still is undefined. Only qualified production devices are to be used.

TI device nomenclature also includes a suffix with the device family name. This suffix indicates the package type (for example, *RVM*), and the temperature range (for example, blank is the default commercial temperature range). Figure 8-1 provides a legend for reading the complete device name for any *CC2564CRVMR* device.

For orderable part numbers of *CC2564CRVMR* devices in the *RVM* package types, see the Package Option Addendum of this document, ti.com, or contact your TI sales representative.

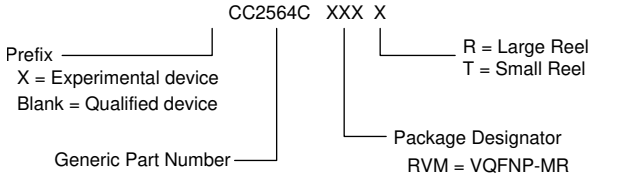

Copyright © 2016, Texas Instruments Incorporated

Figure 8-1. CC2564C Device Nomenclature

8.4 Documentation Support

To receive notification of documentation updates, navigate to the device product folder on ti.com. In the upper right corner, click on *Alert me* to register and receive a weekly digest of any product information that has changed. For change details, review the revision history included in any revised document.

The current documentation that describes the DSP, related peripherals, and other technical collateral is listed in the following.

Application Reports

Application Notes for CC2564C Bluetooth® 4.1 and 4.2 The CC2564C device is the successor of the CC2564B device as a dual-mode Bluetooth® Classic and Bluetooth low energy chip. The CC2564C adds new and significant capabilities to the CC2564B.

QFN/SON PCB Attachment Quad flatpack no leads (QFNs) and small-outline no leads (SONs) are leadless packages with electrical connections made via lands on the bottom side of the component to the surface of the connecting substrate (PCB, ceramic). This application report presents users with introductory information about attaching QFN/SON devices to printed circuit boards (PCBs).

User's Guides

CC2564B to CC2564C Migration Guide The CC2564C device is TI's third generation of the CC2564 dual mode Bluetooth® and Bluetooth low energy single-chip solution. Support for both Bluetooth 4.1 and Bluetooth 4.2 support is implemented.

CC256xC QFN EM User's Guide This user's guide is intended for use with TI's Bluetooth® development platform, the CC256xCQFN-EM board. This guide helps users quickly get started integrating the board with TI's evaluation platforms and software SDKs. In addition, this user's guide describes the components and configurations of the board so that users can quickly get started using it for various Bluetooth applications. This guide provides information about the module so that developers can use the board specifics to apply it to their applications. Module information and capabilities, including pin descriptions as well as available software and tools, enhance the user's out-of-box experience.

White Papers

CC256x Series: Why Classic Bluetooth® (BR/EDR)? Bluetooth® technology is a proven, robust, and widely spread technology. According to Bluetooth SIG®, there are more than 8 billion devices are in circulation, including a strong presence in approximately 95% of all existing mobile phones and smartphones. This technology presents a complete solution for wirelessly transmitting audio, voice, and data. Bluetooth is a well-defined protocol up to the application level, which creates leading interoperability and compatibility between different devices and manufacturers.

Which TI Bluetooth® Solution Should I Choose? Texas Instruments™ offers multiple Bluetooth® solutions, so it might be confusing to choose the correct part. Whether you want to add Bluetooth technology to an existing device or create a new Bluetooth product, the question is: which TI device should be chosen?

Design Files

CC256x Reference Design Files

CC2564 Audio Sink Reference Design

CC256x Hardware Design Checklist

More Literature

TI Bluetooth® CC2564C Solution The TI dual-mode CC2564C solution is a complete Bluetooth® BR / EDR / LE HCI or Bluetooth + Bluetooth low energy solution that reduces design effort and enables fast time to market.

Dual-Mode Bluetooth® CC2564CQFN-EM Evaluation Board This quick start guide offers an overview of the Dual-Mode Bluetooth® CC256XCQFN-EM evaluation board, including the required hardware and software tools, and describes the basic settings. For more information on using the CC256XCQFN-EM board, see the *Dual-Mode Bluetooth® CC2564C Evaluation Board User's Guide*.

Copyright © 2016–2020, Texas Instruments Incorporated

8.5 Support Resources

TI E2E™ support forums are an engineer's go-to source for fast, verified answers and design help — straight from the experts. Search existing answers or ask your own question to get the quick design help you need.

Linked content is provided "AS IS" by the respective contributors. They do not constitute TI specifications and do not necessarily reflect TI's views; see TI's Terms of Use.

8.6 Trademarks

Texas Instruments, TI E2E are trademarks of Texas Instruments.
ARM7TDMI is a registered trademark of ARM Limited.
iPod is a registered trademark of Apple, Inc.
Bluetooth is a registered trademark of Bluetooth SIG, Inc.
All other trademarks are the property of their respective owners.

8.7 Electrostatic Discharge Caution



This integrated circuit can be damaged by ESD. Texas Instruments recommends that all integrated circuits be handled with appropriate precautions. Failure to observe proper handling and installation procedures can cause damage.

ESD damage can range from subtle performance degradation to complete device failure. Precision integrated circuits may be more susceptible to damage because very small parametric changes could cause the device not to meet its published specifications.

8.8 Export Control Notice

Recipient agrees to not knowingly export or re-export, directly or indirectly, any product or technical data (as defined by the U.S., EU, and other Export Administration Regulations) including software, or any controlled product restricted by other applicable national regulations, received from disclosing party under nondisclosure obligations (if any), or any direct product of such technology, to any destination to which such export or re-export is restricted or prohibited by U.S. or other applicable laws, without obtaining prior authorization from U.S. Department of Commerce and other competent Government authorities to the extent required by those laws.

8.9 Glossary

TI Glossary This glossary lists and explains terms, acronyms, and definitions.

9 Mechanical, Packaging, and Orderable Information

The following pages include mechanical, packaging, and orderable information. This information is the most current data available for the designated devices. This data is subject to change without notice and revision of this document. For browser-based versions of this data sheet, refer to the left-hand navigation.

Copyright © 2016–2020, Texas Instruments Incorporated

PACKAGING INFORMATION

Orderable Device	Status (1)	Package Type	Package Drawing	Pins	Package Qty	Eco Plan (2)	Lead finish/ Ball material (6)	MSL Peak Temp (3)	Op Temp (°C)	Device Marking (4/5)	Samples
CC2564CRVMR	ACTIVE	VQFNP-MR	RVM	76	2500	RoHS & Green	SN	Level-3-260C-168 HR	-40 to 85	CC2564C	Samples
CC2564CRVMT	ACTIVE	VQFNP-MR	RVM	76	250	RoHS & Green	SN	Level-3-260C-168 HR	-40 to 85	CC2564C	Samples

(1) The marketing status values are defined as follows:
ACTIVE: Product device recommended for new designs.
LIFEBUY: TI has announced that the device will be discontinued, and a lifetime-buy period is in effect.
NRND: Not recommended for new designs. Device is in production to support existing customers, but TI does not recommend using this part in a new design.
PREVIEW: Device has been announced but is not in production. Samples may or may not be available.
OBSOLETE: TI has discontinued the production of the device.

(2) **RoHS:** TI defines "RoHS" to mean semiconductor products that are compliant with the current EU RoHS requirements for all 10 RoHS substances, including the requirement that RoHS substance do not exceed 0.1% by weight in homogeneous materials. Where designed to be soldered at high temperatures, "RoHS" products are suitable for use in specified lead-free processes. TI may reference these types of products as "Pb-Free".
RoHS Exempt: TI defines "RoHS Exempt" to mean products that contain lead but are compliant with EU RoHS pursuant to a specific EU RoHS exemption.
Green: TI defines "Green" to mean the content of Chlorine (Cl) and Bromine (Br) based flame retardants meet JS709B low halogen requirements of <=1000ppm threshold. Antimony trioxide based flame retardants must also meet the <=1000ppm threshold requirement.

(3) MSL, Peak Temp. - The Moisture Sensitivity Level rating according to the JEDEC industry standard classifications, and peak solder temperature.

(4) There may be additional marking, which relates to the logo, the lot trace code information, or the environmental category on the device.

(5) Multiple Device Markings will be inside parentheses. Only one Device Marking contained in parentheses and separated by a "~" will appear on a device. If a line is indented then it is a continuation of the previous line and the two combined represent the entire Device Marking for that device.

(6) Lead finish/Ball material - Orderable Devices may have multiple material finish options. Finish options are separated by a vertical ruled line. Lead finish/Ball material values may wrap to two lines if the finish value exceeds the maximum column width.

Important Information and Disclaimer: The information provided on this page represents TI's knowledge and belief as of the date that it is provided. TI bases its knowledge and belief on information provided by third parties, and makes no representation or warranty as to the accuracy of such information. Efforts are underway to better integrate information from third parties. TI has taken and continues to take reasonable steps to provide representative and accurate information but may not have conducted destructive testing or chemical analysis on incoming materials and chemicals. TI and TI suppliers consider certain information to be proprietary, and thus CAS numbers and other limited information may not be available for release.

In no event shall TI's liability arising out of such information exceed the total purchase price of the TI part(s) at issue in this document sold by TI to Customer on an annual basis.

TAPE AND REEL INFORMATION

REEL DIMENSIONS

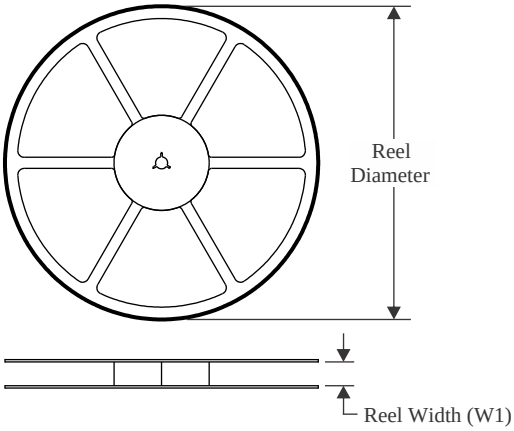

TAPE DIMENSIONS

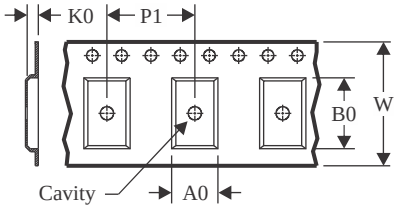

A0	Dimension designed to accommodate the component width
B0	Dimension designed to accommodate the component length
K0	Dimension designed to accommodate the component thickness
W	Overall width of the carrier tape
P1	Pitch between successive cavity centers

QUADRANT ASSIGNMENTS FOR PIN 1 ORIENTATION IN TAPE

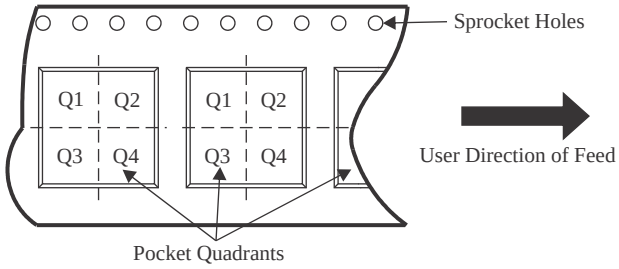

*All dimensions are nominal

Device	Package Type	Package Drawing	Pins	SPQ	Reel Diameter (mm)	Reel Width W1 (mm)	A0 (mm)	B0 (mm)	K0 (mm)	P1 (mm)	W (mm)	Pin1 Quadrant
CC2564CRVMR	VQFNP-MR	RVM	76	2500	330.0	16.4	8.35	8.35	1.7	12.0	16.0	Q2

TAPE AND REEL BOX DIMENSIONS

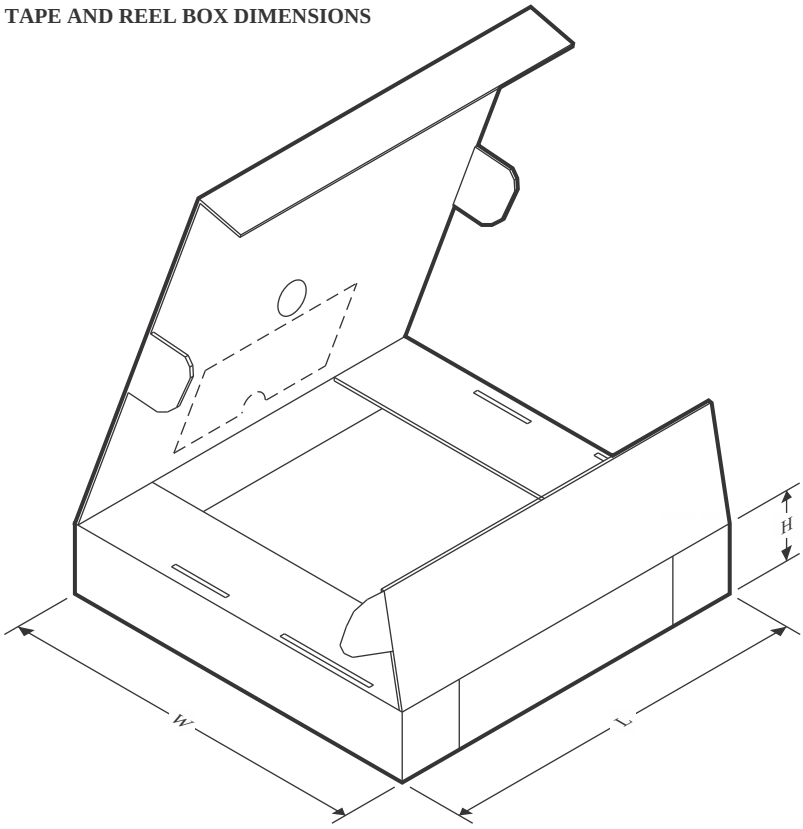

*All dimensions are nominal

Device	Package Type	Package Drawing	Pins	SPQ	Length (mm)	Width (mm)	Height (mm)
CC2564CRVMR	VQFNP-MR	RVM	76	2500	350.0	350.0	43.0

RVM (S–PVQFN–N76) PLASTIC QUAD FLATPACK NO–LEAD

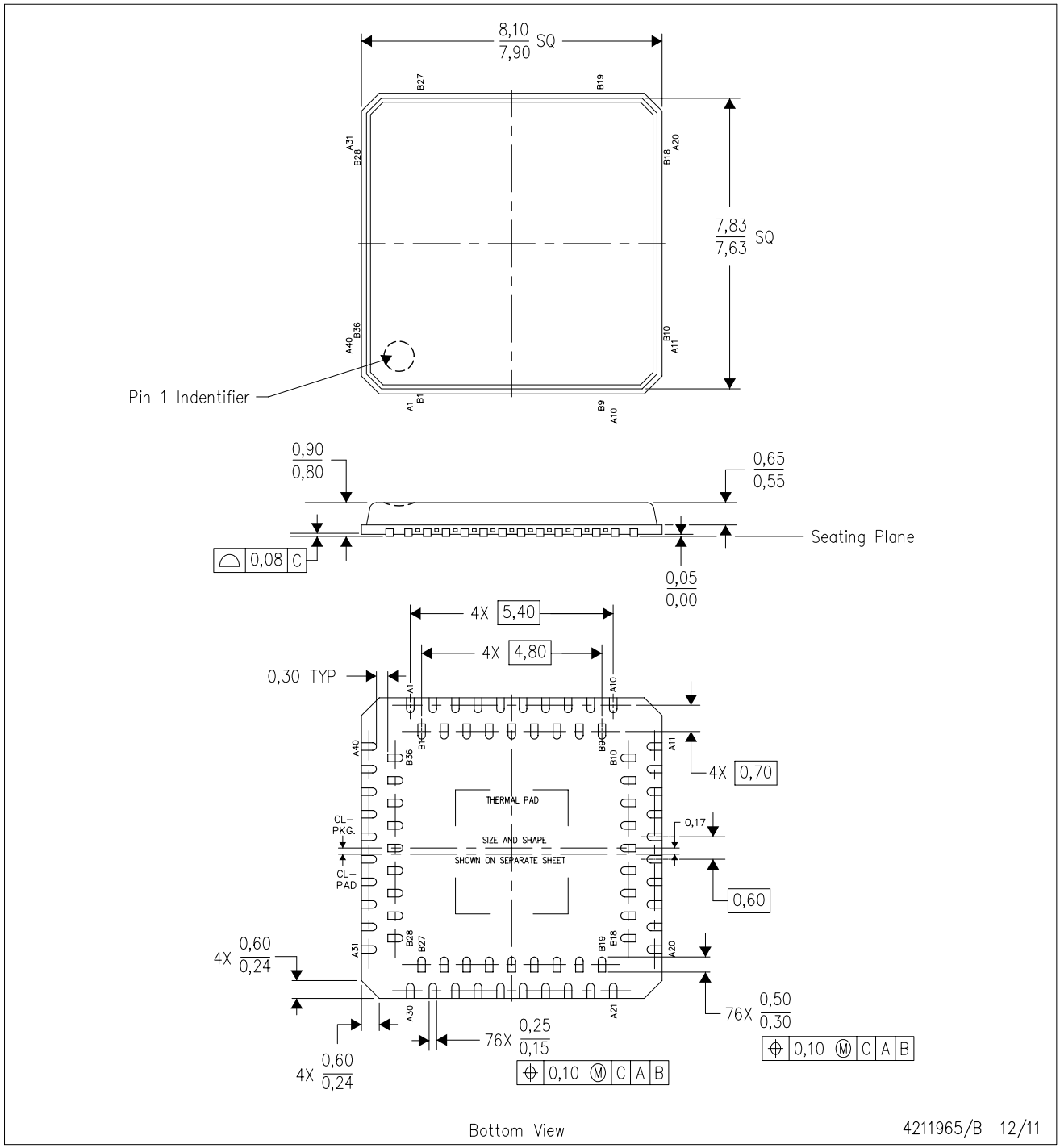

NOTES:
A. All linear dimensions are in millimeters. Dimensioning and tolerancing per ASME Y14.5–1994.
B. This drawing is subject to change without notice.
C. QFN (Quad Flatpack No–Lead) Package configuration.
D. The package thermal pad must be soldered to the board for thermal and mechanical performance.
E. See the additional figure in the Product Data Sheet for details regarding the exposed thermal pad features and dimensions.

IMPORTANT NOTICE AND DISCLAIMER

TI PROVIDES TECHNICAL AND RELIABILITY DATA (INCLUDING DATA SHEETS), DESIGN RESOURCES (INCLUDING REFERENCE DESIGNS), APPLICATION OR OTHER DESIGN ADVICE, WEB TOOLS, SAFETY INFORMATION, AND OTHER RESOURCES “AS IS” AND WITH ALL FAULTS, AND DISCLAIMS ALL WARRANTIES, EXPRESS AND IMPLIED, INCLUDING WITHOUT LIMITATION ANY IMPLIED WARRANTIES OF MERCHANTABILITY, FITNESS FOR A PARTICULAR PURPOSE OR NON-INFRINGEMENT OF THIRD PARTY INTELLECTUAL PROPERTY RIGHTS.

These resources are intended for skilled developers designing with TI products. You are solely responsible for (1) selecting the appropriate TI products for your application, (2) designing, validating and testing your application, and (3) ensuring your application meets applicable standards, and any other safety, security, regulatory or other requirements.

These resources are subject to change without notice. TI grants you permission to use these resources only for development of an application that uses the TI products described in the resource. Other reproduction and display of these resources is prohibited. No license is granted to any other TI intellectual property right or to any third party intellectual property right. TI disclaims responsibility for, and you will fully indemnify TI and its representatives against, any claims, damages, costs, losses, and liabilities arising out of your use of these resources.

TI’s products are provided subject to TI’s Terms of Sale or other applicable terms available either on ti.com or provided in conjunction with such TI products. TI’s provision of these resources does not expand or otherwise alter TI’s applicable warranties or warranty disclaimers for TI products.

TI objects to and rejects any additional or different terms you may have proposed.

Mailing Address: Texas Instruments, Post Office Box 655303, Dallas, Texas 75265
Copyright © 2023, Texas Instruments Incorporated