# CSD95411 Synchronous Buck NexFET™ Smart Power Stage

## 1 Features

- Peak continuous current: 65-A
- Peak efficiency ($f_{SW}$ = 600 kHz, $L_{OUT}$ = 150 nH): Over 94%
- High-frequency operation: up to 1.75 MHz
- Diode emulation function
- Temperature compensated bi-directional current sense
- Analog temperature output
- Fault monitoring
- 3.3-V and 5-V PWM signal compatible
- Tri-state PWM input
- Integrated bootstrap switch
- Optimized dead time for shoot-through protection
- High-density Industry Common QFN 5-mm × 6-mm Footprint
- Ultra-low-inductance package
- System optimized PCB footprint
- Thermally enhanced topside cooling
- RoHS compliant, lead-free terminal plating
- Halogen free

## 2 Applications

- Multiphase Synchronous Buck Converters
- – High-Frequency Applications
- – High-Current, Low-Duty Cycle Applications
- POL DC-DC Converters
- Memory and Graphic Cards
- Desktop and Server VR12.x / VR13.x / VR14.x V-Core Synchronous Buck Converters

## 3 Description

The CSD95411 NexFET™ power stage is a highly optimized design for use with a high-power, high-density synchronous buck converter. This device integrates the driver IC and power MOSFETs to complete the power stage switching function. This combination produces high-current, high-efficiency, and high-speed switching capability in a small 5-mm × 6-mm outline package. The power stage also integrates the accurate current sensing and temperature sensing functionality to simplify system design and improve accuracy. The optimized PCB footprint helps reduce design time and simplify the completion of the overall system design.

**Device Information**

| DEVICE | MEDIA | QTY | PACKAGE(1) | SHIP |
|---|---|---|---|---|
| CSD95411RRB | 13-Inch Reel | 2500 | QFN 5.00-mm × 6.00-mm | Tape and Reel |
| CSD95411RRBT | 7-Inch Reel | 250 | | |

(1) For all available packages, see the orderable addendum at the end of the data sheet.

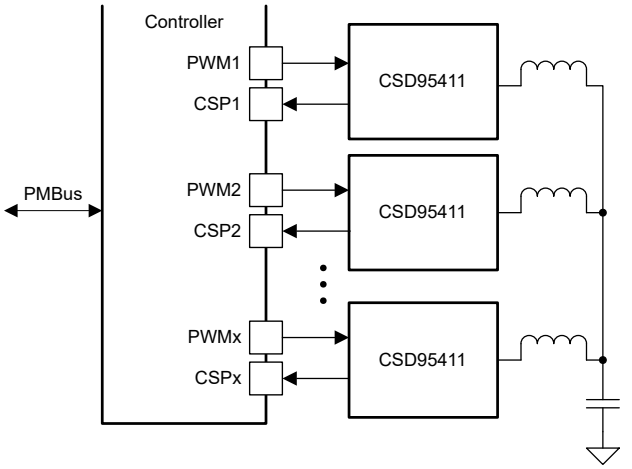


**Simplified Application**

An IMPORTANT NOTICE at the end of this data sheet addresses availability, warranty, changes, use in safety-critical applications, intellectual property matters and other important disclaimers. PRODUCTION DATA.

# Table of Contents

**1 Features**....1
**2 Applications**....1
**3 Description**....1
**4 Revision History**....3
**5 Device and Documentation Support**....4
5.1 Device Support....4
5.2 Documentation Support....4
5.3 Receiving Notification of Documentation Updates....4
5.4 Support Resources....4
5.5 Trademarks....4
5.6 Electrostatic Discharge Caution....4
5.7 Glossary....4
**6 Mechanical, Packaging, and Orderable Information**....5


Copyright © 2025 Texas Instruments Incorporated

# 4 Revision History

| DATE | REVISION | NOTES |
|---|---|---|
| January 2023 | * | Initial release. |

Copyright © 2025 Texas Instruments Incorporated

# 5 Device and Documentation Support

## 5.1 Device Support

### *5.1.1 Third-Party Products Disclaimer*

TI'S PUBLICATION OF INFORMATION REGARDING THIRD-PARTY PRODUCTS OR SERVICES DOES NOT CONSTITUTE AN ENDORSEMENT REGARDING THE SUITABILITY OF SUCH PRODUCTS OR SERVICES OR A WARRANTY, REPRESENTATION OR ENDORSEMENT OF SUCH PRODUCTS OR SERVICES, EITHER ALONE OR IN COMBINATION WITH ANY TI PRODUCT OR SERVICE.

## 5.2 Documentation Support

## 5.3 Receiving Notification of Documentation Updates

To receive notification of documentation updates, navigate to the device product folder on ti.com. Click on *Notifications* to register and receive a weekly digest of any product information that has changed. For change details, review the revision history included in any revised document.

## 5.4 Support Resources

TI E2E™ support forums are an engineer's go-to source for fast, verified answers and design help — straight from the experts. Search existing answers or ask your own question to get the quick design help you need.

Linked content is provided "AS IS" by the respective contributors. They do not constitute TI specifications and do not necessarily reflect TI's views; see TI's Terms of Use.

## 5.5 Trademarks

NexFET™ and TI E2E™ are trademarks of Texas Instruments.
All trademarks are the property of their respective owners.

## 5.6 Electrostatic Discharge Caution



This integrated circuit can be damaged by ESD. Texas Instruments recommends that all integrated circuits be handled with appropriate precautions. Failure to observe proper handling and installation procedures can cause damage.

ESD damage can range from subtle performance degradation to complete device failure. Precision integrated circuits may be more susceptible to damage because very small parametric changes could cause the device not to meet its published specifications.

## 5.7 Glossary

| | |
|---|---|
| TI Glossary | This glossary lists and explains terms, acronyms, and definitions. |


Copyright © 2025 Texas Instruments Incorporated

## 6 Mechanical, Packaging, and Orderable Information

The following pages include mechanical, packaging, and orderable information. This information is the most current data available for the designated devices. This data is subject to change without notice and revision of this document. For browser-based versions of this data sheet, refer to the left-hand navigation.

Copyright © 2025 Texas Instruments Incorporated

## PACKAGING INFORMATION

| Orderable Device | Status (1) | Package Type | Package Drawing | Pins | Package Qty | Eco Plan (2) | Lead finish/ Ball material (6) | MSL Peak Temp (3) | Op Temp (°C) | Device Marking (4/5) | Samples |
|---|---|---|---|---|---|---|---|---|---|---|---|
| CSD95411RRB | ACTIVE | VQFN-CLIP | RRB | 41 | 2500 | RoHS-Exempt & Green | NIPDAU | Level-2-260C-1 YEAR | -40 to 125 | 95411RRB | Samples |
| CSD95411RRBT | ACTIVE | VQFN-CLIP | RRB | 41 | 250 | RoHS-Exempt & Green | NIPDAU | Level-2-260C-1 YEAR | -40 to 125 | 95411RRB | Samples |

(1) The marketing status values are defined as follows:
**ACTIVE:** Product device recommended for new designs.
**LIFEBUY:** TI has announced that the device will be discontinued, and a lifetime-buy period is in effect.
**NRND:** Not recommended for new designs. Device is in production to support existing customers, but TI does not recommend using this part in a new design.
**PREVIEW:** Device has been announced but is not in production. Samples may or may not be available.
**OBSOLETE:** TI has discontinued the production of the device.

(2) **RoHS:** TI defines "RoHS" to mean semiconductor products that are compliant with the current EU RoHS requirements for all 10 RoHS substances, including the requirement that RoHS substance do not exceed 0.1% by weight in homogeneous materials. Where designed to be soldered at high temperatures, "RoHS" products are suitable for use in specified lead-free processes. TI may reference these types of products as "Pb-Free".
**RoHS Exempt:** TI defines "RoHS Exempt" to mean products that contain lead but are compliant with EU RoHS pursuant to a specific EU RoHS exemption.
**Green:** TI defines "Green" to mean the content of Chlorine (Cl) and Bromine (Br) based flame retardants meet JS709B low halogen requirements of <=1000ppm threshold. Antimony trioxide based flame retardants must also meet the <=1000ppm threshold requirement.

(3) MSL, Peak Temp. - The Moisture Sensitivity Level rating according to the JEDEC industry standard classifications, and peak solder temperature.

(4) There may be additional marking, which relates to the logo, the lot trace code information, or the environmental category on the device.

(5) Multiple Device Markings will be inside parentheses. Only one Device Marking contained in parentheses and separated by a "~" will appear on a device. If a line is indented then it is a continuation of the previous line and the two combined represent the entire Device Marking for that device.

(6) Lead finish/Ball material - Orderable Devices may have multiple material finish options. Finish options are separated by a vertical ruled line. Lead finish/Ball material values may wrap to two lines if the finish value exceeds the maximum column width.

**Important Information and Disclaimer:**The information provided on this page represents TI's knowledge and belief as of the date that it is provided. TI bases its knowledge and belief on information provided by third parties, and makes no representation or warranty as to the accuracy of such information. Efforts are underway to better integrate information from third parties. TI has taken and continues to take reasonable steps to provide representative and accurate information but may not have conducted destructive testing or chemical analysis on incoming materials and chemicals. TI and TI suppliers consider certain information to be proprietary, and thus CAS numbers and other limited information may not be available for release.

In no event shall TI's liability arising out of such information exceed the total purchase price of the TI part(s) at issue in this document sold by TI to Customer on an annual basis.

## TAPE AND REEL INFORMATION

**REEL DIMENSIONS**

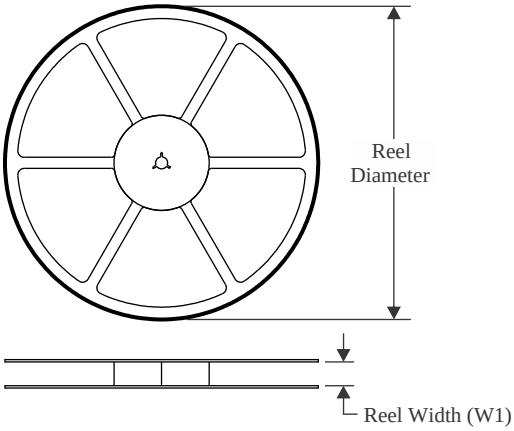


**TAPE DIMENSIONS**

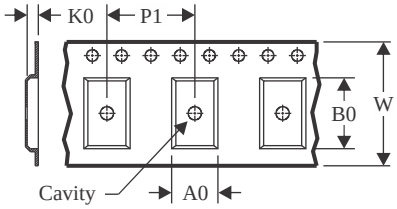


| | |
|---|---|
| A0 | Dimension designed to accommodate the component width |
| B0 | Dimension designed to accommodate the component length |
| K0 | Dimension designed to accommodate the component thickness |
| W | Overall width of the carrier tape |
| P1 | Pitch between successive cavity centers |

**QUADRANT ASSIGNMENTS FOR PIN 1 ORIENTATION IN TAPE**

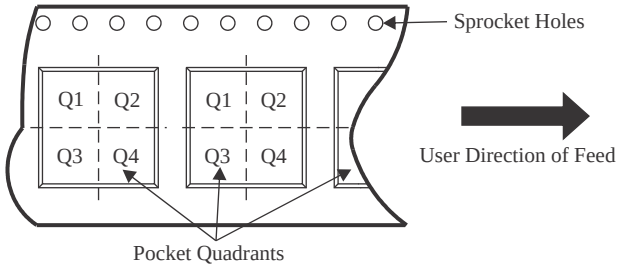


*All dimensions are nominal

| Device | Package Type | Package Drawing | Pins | SPQ | Reel Diameter (mm) | Reel Width W1 (mm) | A0 (mm) | B0 (mm) | K0 (mm) | P1 (mm) | W (mm) | Pin1 Quadrant |
|---|---|---|---|---|---|---|---|---|---|---|---|---|
| CSD95411RRB | VQFN-CLIP | RRB | 41 | 2500 | 330.0 | 12.4 | 5.3 | 6.3 | 1.2 | 8.0 | 12.0 | Q1 |
| CSD95411RRBT | VQFN-CLIP | RRB | 41 | 250 | 180.0 | 12.4 | 5.3 | 6.3 | 1.2 | 8.0 | 12.0 | Q1 |

TAPE AND REEL BOX DIMENSIONS

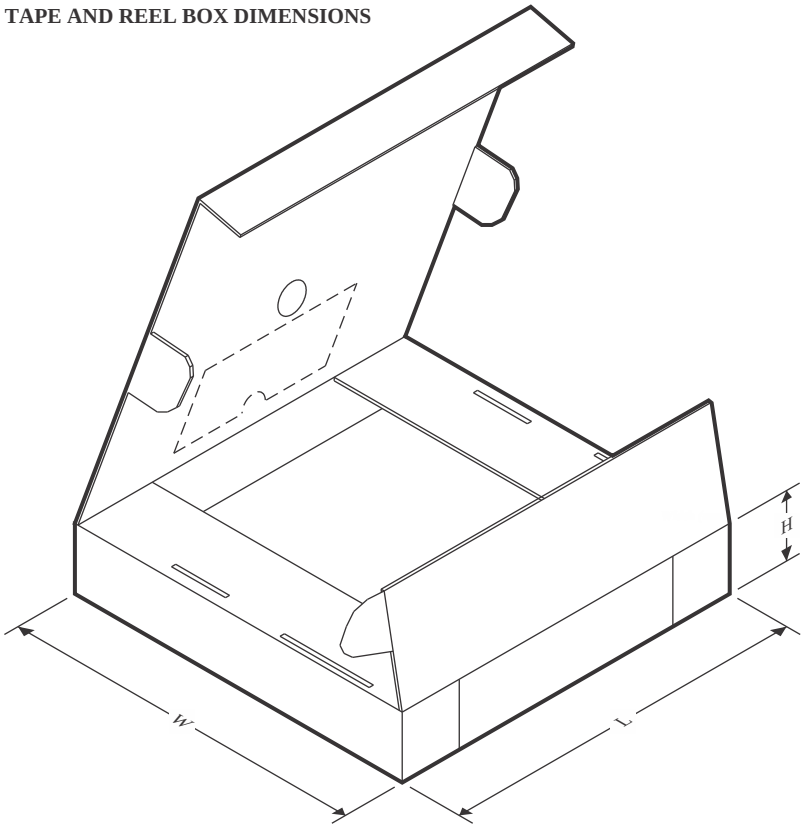


*All dimensions are nominal

| Device | Package Type | Package Drawing | Pins | SPQ | Length (mm) | Width (mm) | Height (mm) |
|---|---|---|---|---|---|---|---|
| CSD95411RRB | VQFN-CLIP | RRB | 41 | 2500 | 367.0 | 367.0 | 38.0 |
| CSD95411RRBT | VQFN-CLIP | RRB | 41 | 250 | 213.0 | 191.0 | 35.0 |

# IMPORTANT NOTICE AND DISCLAIMER

TI PROVIDES TECHNICAL AND RELIABILITY DATA (INCLUDING DATA SHEETS), DESIGN RESOURCES (INCLUDING REFERENCE DESIGNS), APPLICATION OR OTHER DESIGN ADVICE, WEB TOOLS, SAFETY INFORMATION, AND OTHER RESOURCES “AS IS” AND WITH ALL FAULTS, AND DISCLAIMS ALL WARRANTIES, EXPRESS AND IMPLIED, INCLUDING WITHOUT LIMITATION ANY IMPLIED WARRANTIES OF MERCHANTABILITY, FITNESS FOR A PARTICULAR PURPOSE OR NON-INFRINGEMENT OF THIRD PARTY INTELLECTUAL PROPERTY RIGHTS.

These resources are intended for skilled developers designing with TI products. You are solely responsible for (1) selecting the appropriate TI products for your application, (2) designing, validating and testing your application, and (3) ensuring your application meets applicable standards, and any other safety, security, regulatory or other requirements.

These resources are subject to change without notice. TI grants you permission to use these resources only for development of an application that uses the TI products described in the resource. Other reproduction and display of these resources is prohibited. No license is granted to any other TI intellectual property right or to any third party intellectual property right. TI disclaims responsibility for, and you will fully indemnify TI and its representatives against, any claims, damages, costs, losses, and liabilities arising out of your use of these resources.

TI’s products are provided subject to TI’s Terms of Sale or other applicable terms available either on ti.com or provided in conjunction with such TI products. TI’s provision of these resources does not expand or otherwise alter TI’s applicable warranties or warranty disclaimers for TI products.

TI objects to and rejects any additional or different terms you may have proposed.

Mailing Address: Texas Instruments, Post Office Box 655303, Dallas, Texas 75265
Copyright © 2025, Texas Instruments Incorporated