National Semiconductor
The Sight & Sound of Information

LM86, LM89, LM89-1, LM90, LM99, LM99-1 Evaluation Board User's Guide

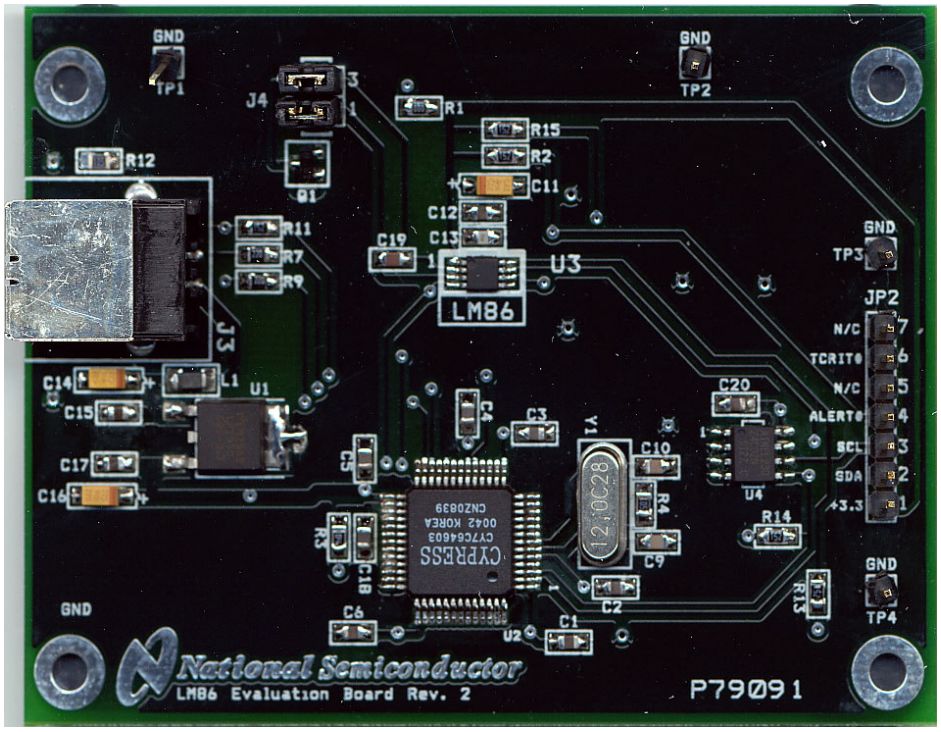

© Copyright 2003 National Semiconductor Corporation

Table of Contents

1.0 Introduction 3, 4

2.0 Getting Started 4

2.1 Required Equipment 4
2.2 Optional Equipment 4
2.3 Test Setup – Software 4
2.4 Test Setup - Hardware. 5
2.5 Test Setup – System 5

3.0 Connection Details. 6

4.0 Schematic of LM**xx** Evaluation Board 7

5.0 Bill of Materials 8

1.0 Introduction

The LM**xx**EVAL kit (**xx** = 86, 89, 89-1, 90, 99, 99-1) includes the following items:

1. The LM**xx** Evaluation Board (for LM86, LM89, LM89-1, LM90, LM99, LM99-1 products)
2. The SensorEval Software CD, including
    a. the readme.txt file (read this first)
    b. the installation setup file,
    c. the SensorEval Software manual, and
    d. this manual.

The LM**xx** Evaluation Board, as shown in Figure 1, is a complete PCBA (printed circuit board assembly). The board has a USB connector, a voltage regulator circuit, a microcontroller, an EEPROM, and a LM**xx** Remote Diode Temperature Sensor. A schematic and bill of materials is included in this User's Guide. Figure 1 shows the location of pin1 for the device under test.

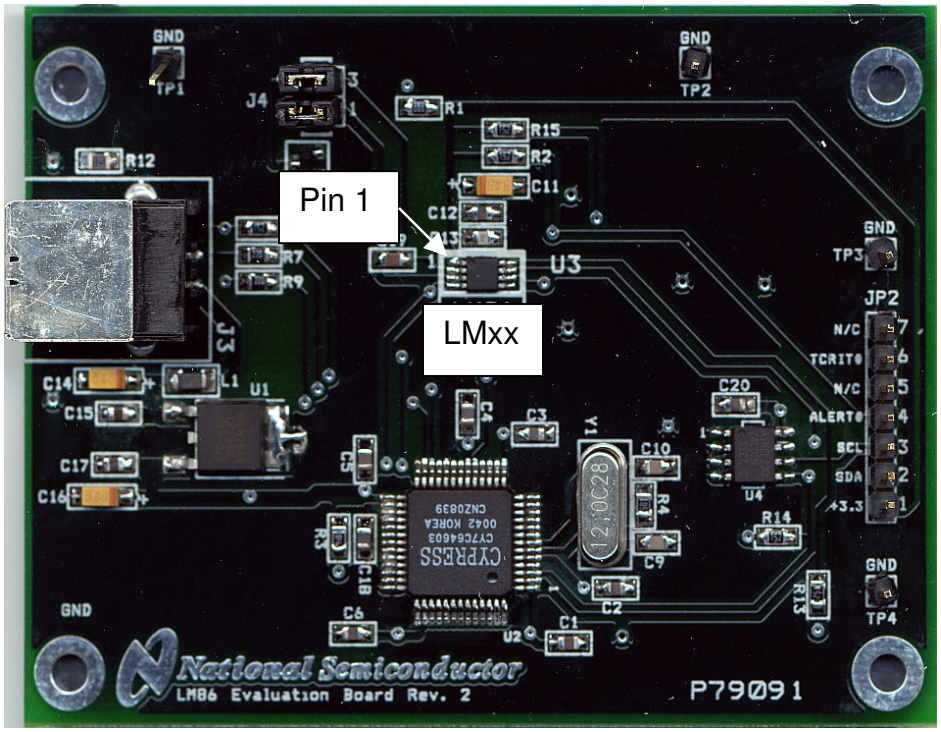

Figure 1. The LM**xx** Evaluation Board showing pin 1

1.0 Introduction (Continued)

The LM**xx**EVAL kit includes the SensorEval software, which is provided by National Semiconductor to communicate with the LM**xx** Evaluation Board by way of the USB cable (not provided) from the controlling computer. The SensorEval software is used to control the writing and reading of the digital registers in the LM**xx** for doing the initial register setup, reading the local and remote temperatures, establishing certain temperature limit setpoints.

For the installation procedure for the SensorEval software see the readme.txt file on the SensorEval software CD. For detailed use of the LM**xx** software used with the LM**xx** Evaluation Board, please refer to the SensorEval software user's guide on the CD. The LM**xx** datasheet is available at www.national.com.

2.0 Getting Started

2.1 Required Equipment

In order to use the LM**xx** Evaluation Board you will need to have the following required pieces of equipment:

1. A computer with at least a Pentium III processor, running Microsoft® Windows® 98/2000/XP[1] operating system, with 20 MB of free disk space, and at least one USB port

2. A standard USB cable (3 foot length should be sufficient) for connecting the computer to the LM**xx** Evaluation Board.

If it is desired to run the software only, without the LMxx Evaluation board, omit item 2 and proceed to paragraph 2.3.

2.2 Optional Equipment

Optional pieces of equipment are as follows:

1. Remote Diode with wired connector to connect to a female 2-pin header, 0.1 in centers
2. Test equipment such as a digital voltmeter or oscilloscope.

2.3 Test Setup - Software

First, see the readme.txt file on the SensorEval CD for the latest installation instructions. Follow the installation procedures to load the software on the computer and, if desired, to verify the operation of the LMxx Evaluation Board.

The SensorEval icon will be on the desktop window after the software installation.

For use with the LMxx Evaluation Board disconnect the USB cable from the board and proceed to the next section for the hardware setup.

If it is desired to run the software, without the LMxx Evaluation Board, please proceed to the next section for the hardware setup.

[1] Microsoft®, Windows®, XP® are registered trademarks of Microsoft Corporation.

2.0 Getting Started (continued)

2.4 Test Setup – Hardware

Figure 2 below shows an example of a typical LM**xx** Evaluation Board test setup.

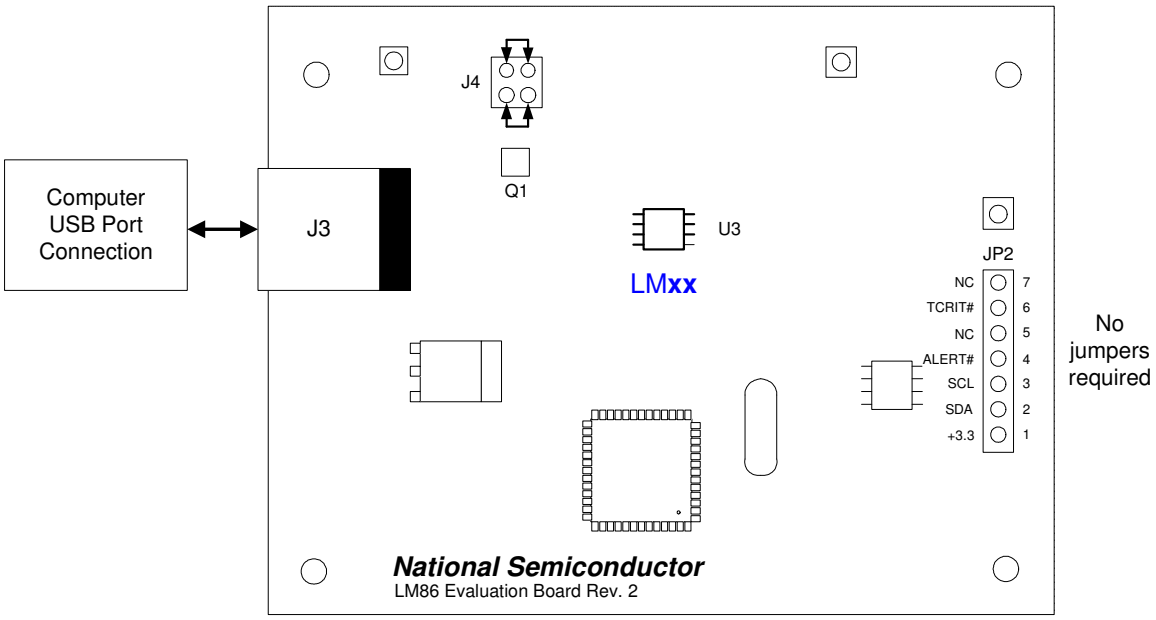

LM**xx = LM86, LM89, LM89-1, LM90, LM99, or LM99-1**

Figure 2. Test Setup using the LM**xx** Evaluation Board

No jumpers are required on header JP2.

Hardware Test Setup Procedure

1. The LM**xx** Evaluation Board comes with jumpers installed on J4, which connects the on-board MMBT3904 diode-connected transistor to the input of the LM**xx** chip.
2. Connect the USB cable from the computer's USB port to the LM**xx** Evaluation Board.
3. Start the SensorEval software.

2.5 Test Setup – System

For continuous temperature readings select the read continuous check box.

3.0 Connection Details

Table 1 below describes all the connections and test points of the LM**xx** evaluation board**.**

Table 1. LMxx Evaluation Board Connections and Test Points

Symbol	Description of the Connections
J3	This is the USB Type B connector to connect to the computer.
J4	This allows the user to either: (1) connect jumpers horizontally to the top and bottom pin pairs to connect to the on-board MMBT3904 **or** (2) to remove the jumpers and connect a remote diode directly to the input of the LM**xx**.
JP2	TCRIT# and ALERT# are the open drain LM**xx** output pins VDC (+3.3 VDC), and the SMBus Clock and Data signals are available to the user for system monitoring.

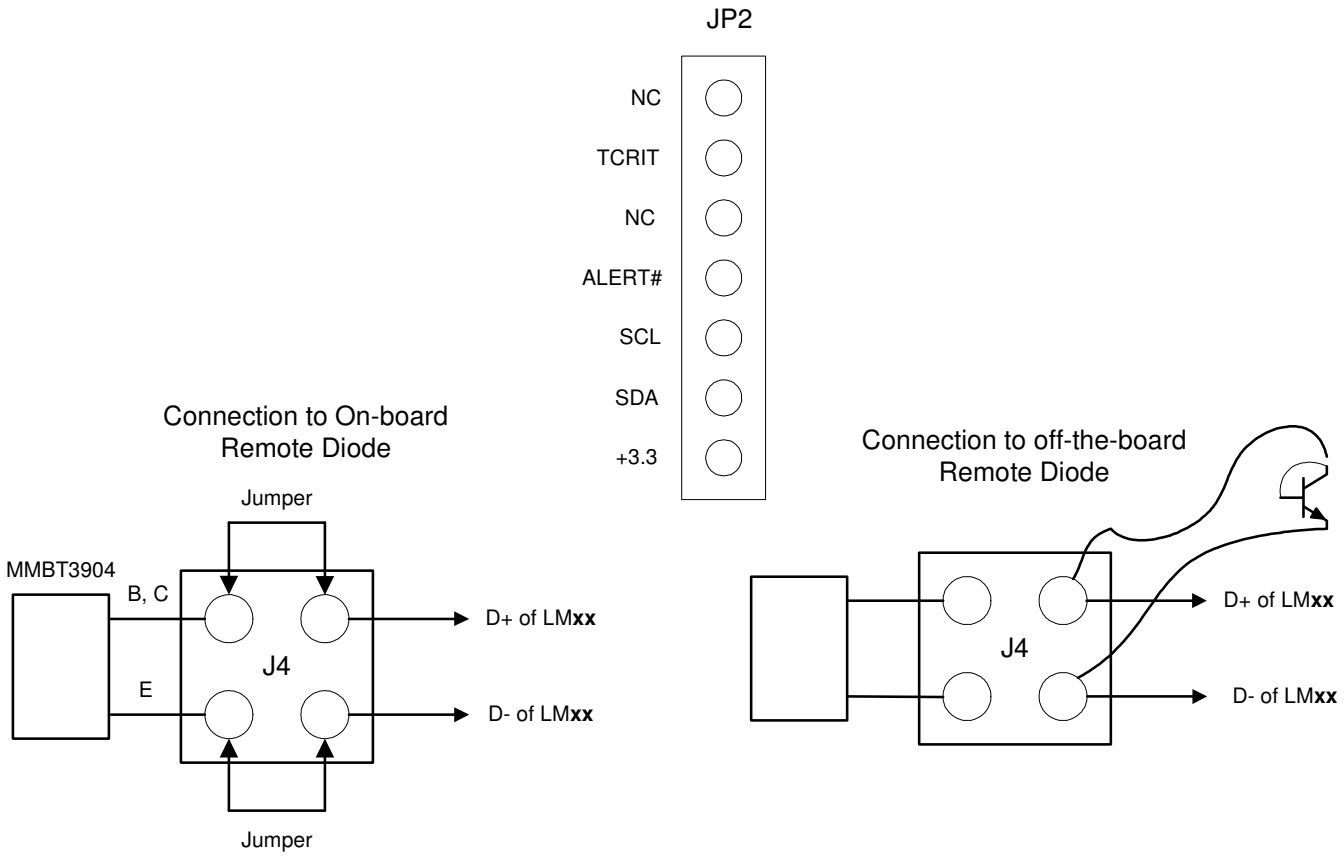

Figure 3. Header Connectors on the LM**xx** Evaluation Board

4.0 Schematic of the LMxx Evaluation Board

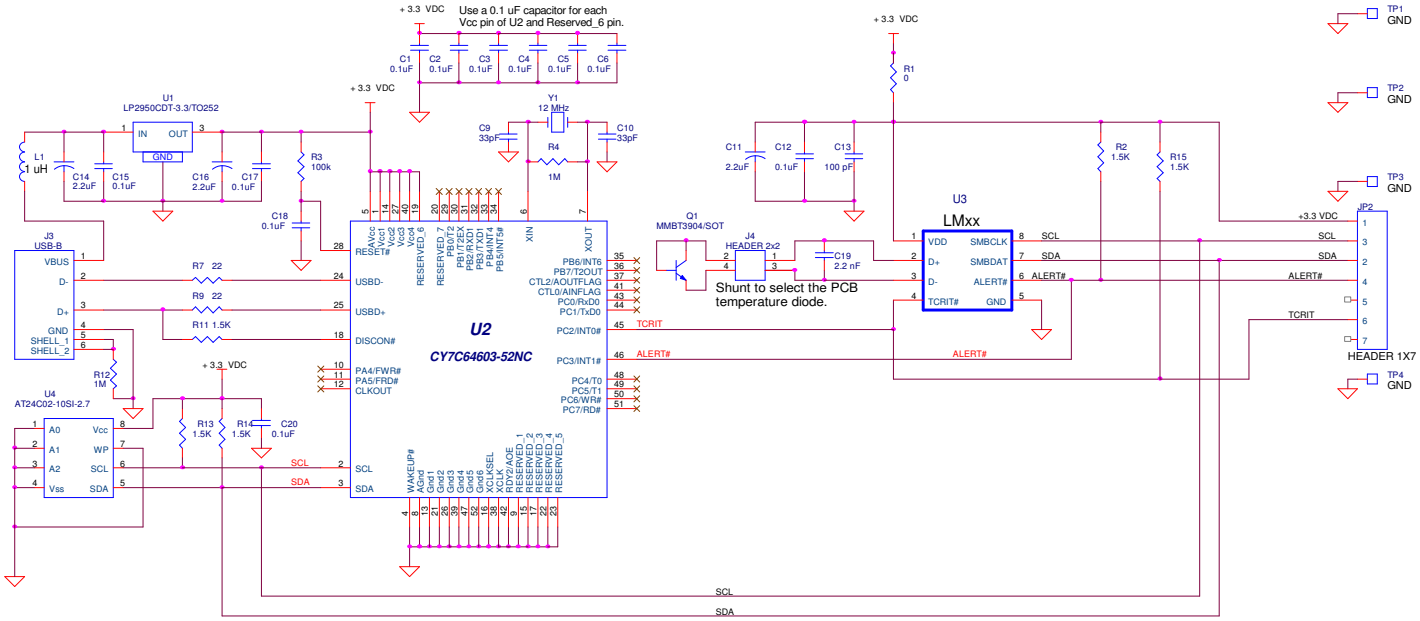

Figure 4. LM**xx** Evaluation Board Schematic

5.0 LMxx Evaluation Board - Bill of Materials

Item	Quantity	Reference	Part
1	11	C1,C2,C3,C4,C5,C6,C12, C15,C17,C18,C20	Capacitor, ceramic,0.1uF
2	2	C9,C10	Capacitor, ceramic,33pF
3	3	C11,C14,C16	Capacitor, ceramic,2.2uF
4	1	C13	Capacitor, ceramic,100 pF
5	1	C19	Capacitor, ceramic,2.2 nF
6	1	JP2	Header 1x7
7	1	J3	Connector, USB-B
8	1	J4	Header 2x2
9	1	L1	Filter, 1uH, Stewart MI1206K900R-00
10	1	Q1	Transistor, NPN, MMBT3904
11	1	R1	Resistor, SMT,0 Ohm
12	5	R2,R11,R13,R14,R15	Resistor, SMT,1.5K
13	1	R3	Resistor, SMT,100k
14	2	R4,R12	Resistor, SMT,1M
15	2	R9,R7	Resistor, SMT,22 Ohm
16	4	TP1,TP2,TP3,TP4	Header 1x1
17	1	U1	IC, 3.3 VDC Voltage Regulator, National LP2950CDT-3.3/TO252
18	1	U2	IC, microcontroller, Cypress CY7C64603-52NC
19	1	U3	LMxx Part
20	1	U4	IC, EEPROM, Atmel AT24C02-10SI-2.7
33	1	Y1	Crystal, 12 MHz, Pletronics 2S1200G140
34	1		Circuit Board, Fabricated, LM86 Evaluation Board, Rev 2

IMPORTANT NOTICE

Texas Instruments Incorporated and its subsidiaries (TI) reserve the right to make corrections, modifications, enhancements, improvements, and other changes to its products and services at any time and to discontinue any product or service without notice. Customers should obtain the latest relevant information before placing orders and should verify that such information is current and complete. All products are sold subject to TI's terms and conditions of sale supplied at the time of order acknowledgment.

TI warrants performance of its hardware products to the specifications applicable at the time of sale in accordance with TI's standard warranty. Testing and other quality control techniques are used to the extent TI deems necessary to support this warranty. Except where mandated by government requirements, testing of all parameters of each product is not necessarily performed.

TI assumes no liability for applications assistance or customer product design. Customers are responsible for their products and applications using TI components. To minimize the risks associated with customer products and applications, customers should provide adequate design and operating safeguards.

TI does not warrant or represent that any license, either express or implied, is granted under any TI patent right, copyright, mask work right, or other TI intellectual property right relating to any combination, machine, or process in which TI products or services are used. Information published by TI regarding third-party products or services does not constitute a license from TI to use such products or services or a warranty or endorsement thereof. Use of such information may require a license from a third party under the patents or other intellectual property of the third party, or a license from TI under the patents or other intellectual property of TI.

Reproduction of TI information in TI data books or data sheets is permissible only if reproduction is without alteration and is accompanied by all associated warranties, conditions, limitations, and notices. Reproduction of this information with alteration is an unfair and deceptive business practice. TI is not responsible or liable for such altered documentation. Information of third parties may be subject to additional restrictions.

Resale of TI products or services with statements different from or beyond the parameters stated by TI for that product or service voids all express and any implied warranties for the associated TI product or service and is an unfair and deceptive business practice. TI is not responsible or liable for any such statements.

TI products are not authorized for use in safety-critical applications (such as life support) where a failure of the TI product would reasonably be expected to cause severe personal injury or death, unless officers of the parties have executed an agreement specifically governing such use. Buyers represent that they have all necessary expertise in the safety and regulatory ramifications of their applications, and acknowledge and agree that they are solely responsible for all legal, regulatory and safety-related requirements concerning their products and any use of TI products in such safety-critical applications, notwithstanding any applications-related information or support that may be provided by TI. Further, Buyers must fully indemnify TI and its representatives against any damages arising out of the use of TI products in such safety-critical applications.

TI products are neither designed nor intended for use in military/aerospace applications or environments unless the TI products are specifically designated by TI as military-grade or "enhanced plastic." Only products designated by TI as military-grade meet military specifications. Buyers acknowledge and agree that any such use of TI products which TI has not designated as military-grade is solely at the Buyer's risk, and that they are solely responsible for compliance with all legal and regulatory requirements in connection with such use.

TI products are neither designed nor intended for use in automotive applications or environments unless the specific TI products are designated by TI as compliant with ISO/TS 16949 requirements. Buyers acknowledge and agree that, if they use any non-designated products in automotive applications, TI will not be responsible for any failure to meet such requirements.

Following are URLs where you can obtain information on other Texas Instruments products and application solutions:

Products		**Applications**	
Audio	www.ti.com/audio	Automotive and Transportation	www.ti.com/automotive
Amplifiers	amplifier.ti.com	Communications and Telecom	www.ti.com/communications
Data Converters	dataconverter.ti.com	Computers and Peripherals	www.ti.com/computers
DLP® Products	www.dlp.com	Consumer Electronics	www.ti.com/consumer-apps
DSP	dsp.ti.com	Energy and Lighting	www.ti.com/energy
Clocks and Timers	www.ti.com/clocks	Industrial	www.ti.com/industrial
Interface	interface.ti.com	Medical	www.ti.com/medical
Logic	logic.ti.com	Security	www.ti.com/security
Power Mgmt	power.ti.com	Space, Avionics and Defense	www.ti.com/space-avionics-defense
Microcontrollers	microcontroller.ti.com	Video and Imaging	www.ti.com/video
RFID	www.ti-rfid.com		
OMAP Mobile Processors	www.ti.com/omap		
Wireless Connectivity	www.ti.com/wirelessconnectivity		
	TI E2E Community Home Page		e2e.ti.com

Mailing Address: Texas Instruments, Post Office Box 655303, Dallas, Texas 75265
Copyright © 2012, Texas Instruments Incorporated