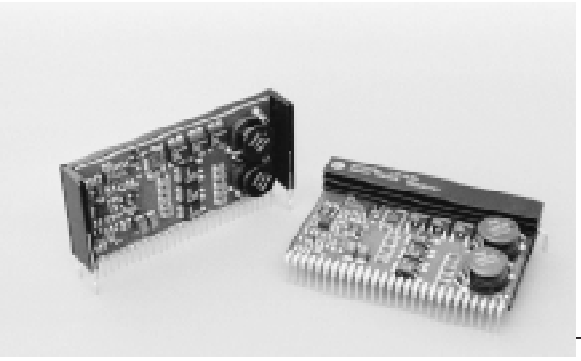

## Description

The PT7779 is a high-output 32A Integrated Switching Regulator (ISR), housed in a 27-pin SIP package. The PT7779 is the next generation of the industry benchmark PT7771. The PT7779 includes short circuit protection and requires only 330µF of output capacitance for proper operation.

The 32A output capability allows the easy integration of the latest high-speed, µPs, ASICs, DSPs into existing 5V systems. For additional current, the PT7779 is designed to operate with up to two PT7741 32A compatible current boosters. The output voltage is programmable from 1.3V to 3.5V using a 5-bit input, that is compatible with Intel's Pentium® II Processors. A differential remote sense compensates for any voltage drop between the ISR and load.

## Standard Application

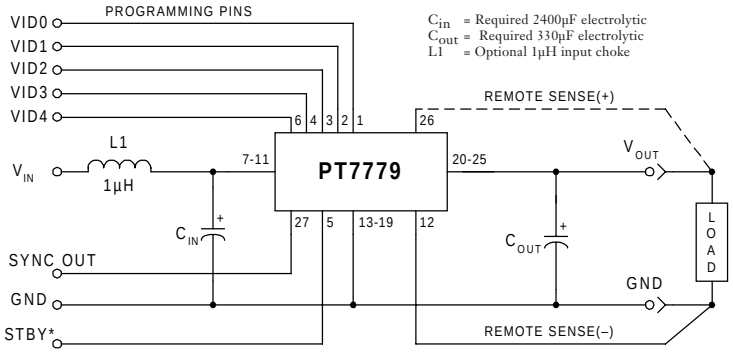


## Pin-Out Information

| Pin | Function |
|---|---|
| 1 | VID0 |
| 2 | VID1 |
| 3 | VID2 |
| 4 | VID3 |
| 5 | STBY*- Stand-by |
| 6 | VID4 |
| 7 | $V_{in}$ |
| 8 | $V_{in}$ |
| 9 | $V_{in}$ |
| 10 | $V_{in}$ |
| 11 | $V_{in}$ |
| 12 | Remote Sense Gnd (3) |
| 13 | GND |
| 14 | GND |

| Pin | Function |
|---|---|
| 15 | GND |
| 16 | GND |
| 17 | GND |
| 18 | GND |
| 19 | GND |
| 20 | $V_{out}$ |
| 21 | $V_{out}$ |
| 22 | $V_{out}$ |
| 23 | $V_{out}$ |
| 24 | $V_{out}$ |
| 25 | $V_{out}$ |
| 26 | Remote Sense $V_{out}$ |
| 27 | Sync Out |

For STBY* pin; open = output enabled; ground = output disabled.

## Specifications

| Characteristics ($T_a$ = 25°C unless noted) | Symbols | Conditions | PT7779 Min | PT7779 Typ | PT7779 Max | Units |
|---|---|---|---|---|---|---|
| Output Current | $I_o$ | $T_a$ = +60°C, 200 LFM, pkg N<br>$T_a$ = +25°C, natural convection | 0.1 (1)<br>0.1 (1) | —<br>— | 31<br>32 | A |
| Input Voltage Range | $V_{in}$ | 0.1A ≤ $I_o$ ≤ 32A | 4.5 | — | 5.5 | V |
| Output Voltage Tolerance | $\Delta V_o$ | $V_{in}$ = +5V, $I_o$ = 32A<br>–40°C ≤ $T_a$ ≤ +85°C | $V_o$-0.03 | — | $V_o$+0.03 | V |
| Line Regulation | $Reg_{line}$ | 4.5V ≤ $V_{in}$ ≤ 5.5V, $I_o$ = 32A | — | ±10 | — | mV |
| Load Regulation | $Reg_{load}$ | $V_{in}$ = +5V, 0.1 ≤ $I_o$ ≤ 32A | — | ±10 | — | mV |
| $V_o$ Ripple/Noise pk-pk | $V_n$ | $V_{in}$ = +5V, $I_o$ = 32A | — | 50 | — | mV |
| Transient Response<br>with $C_{out}$ = 330µF | $t_{tr}$<br>$V_{os}$ | $I_o$ step between 16A and 32A<br>$V_o$ over/undershoot | —<br>— | 100<br>200 | —<br>— | µSec<br>mV |
| Efficiency | η | $V_{in}$ = +5V, $I_o$ = 20A, $V_o$ = 3.3V | — | 90 | — | % |
| Switching Frequency | $f_o$ | 4.5V ≤ $V_{in}$ ≤ 5.5V<br>0.1A ≤ $I_o$ ≤ 32A | 300 | 350 | 400 | kHz |
| Absolute Maximum Operating Temperature Range | $T_a$ | Over $V_{in}$ Range | –40 | — | +85 (2) | °C |
| Storage Temperature | $T_s$ | — | -40 | — | +125 | °C |
| Mechanical Vibration | | Per Mil-STD-883D, Method 2007.2, 20-20,000Hz, Soldered in a PC board | — | 10/15 | — | G's |
| Weight | — | Vertical/Horizontal | — | 53/66 | — | grams |

**Notes:** *(1) ISR-will operate down to no load with reduced specifications.*
*(2) Consult the Safe Operating Area curves, or contact the factory for the appropriate derating.*
*(3) If the remote sense ground is not used, pin 12 must be connected to pin13 for optimum output voltage accuracy.*

***External Capacitors:*** *The PT7779 requires a minimum output capacitance of 330µF for proper operation. The PT7779 also requires an input capacitance of 2400µF, which must be rated for a minimum of 2.0Arms of ripple current. For transient or dynamic load applications, additional capacitance may be required. For further information, see the accompanying application note on capacitor selection for this product.*

***Input Filter:*** *An input filter inductor is optional for most applications. The input inductor must be sized to handle 32ADC with a typical value of 1µH.*

# PT7779—5V

## 32 Amp Programmable Integrated Switching Regulator

### Features

- +5V Input
- 32A Output (64A with PT7741 Booster)
- 5-bit Programmable: 1.3V to 3.5V
- High Efficiency
- Short Circuit Protection
- Differential Remote Sense
- 27-pin SIP Package

### Programming Information

| VID3 | VID2 | VID1 | VID0 | VID4=1 Vout | VID4=0 Vout |
|---|---|---|---|---|---|
| 1 | 1 | 1 | 1 | 2.0V | 1.30V |
| 1 | 1 | 1 | 0 | 2.1V | 1.35V |
| 1 | 1 | 0 | 1 | 2.2V | 1.40V |
| 1 | 1 | 0 | 0 | 2.3V | 1.45V |
| 1 | 0 | 1 | 1 | 2.4V | 1.50V |
| 1 | 0 | 1 | 0 | 2.5V | 1.55V |
| 1 | 0 | 0 | 1 | 2.6V | 1.60V |
| 1 | 0 | 0 | 0 | 2.7V | 1.65V |
| 0 | 1 | 1 | 1 | 2.8V | 1.70V |
| 0 | 1 | 1 | 0 | 2.9V | 1.75V |
| 0 | 1 | 0 | 1 | 3.0V | 1.80V |
| 0 | 1 | 0 | 0 | 3.1V | 1.85V |
| 0 | 0 | 1 | 1 | 3.2V | 1.90V |
| 0 | 0 | 1 | 0 | 3.3V | 1.95V |
| 0 | 0 | 0 | 1 | 3.4V | 2.00V |
| 0 | 0 | 0 | 0 | 3.5V | 2.05V |

Logic 0 = Pin 12 potential (remote sense gnd)
Logic 1 = Open circuit (no pull-up resistors)
VID3 and VID4 may not be changed while the unit is operating.

### Ordering Information

**PT7779❑** = 1.3 to 3.5 Volts

*For dimensions and PC board layout, see Package Style 1020 and 1030*

### PT Series Suffix (PT1234X)

| Case/Pin Configuration | |
|---|---|
| Vertical Through-Hole | N |
| Horizontal Through-Hole | A |
| Horizontal Surface Mount | C |

## TYPICAL CHARACTERISTICS

### Performance Characteristics, $V_{in}$ =5V (See Note A)

#### Efficiency Vs Output Current

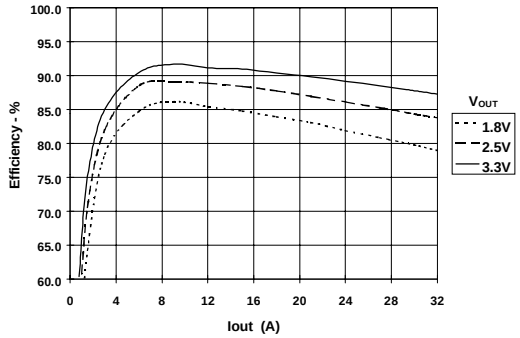


#### Output Ripple Vs Output Current

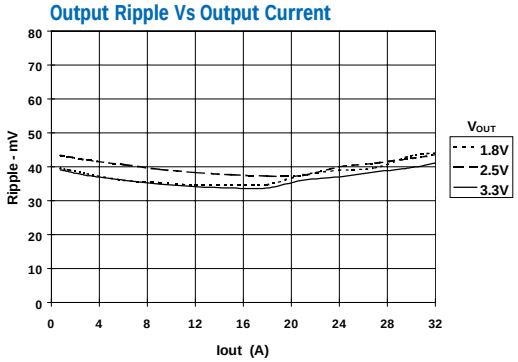


#### Power Dissipation Vs Output Current

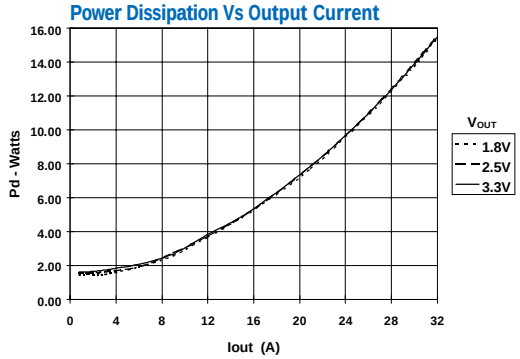


### Safe Operating Area Curves (See Note B)

#### PT7779, $V_{IN}$ =5V, $V_O$ =3.3V

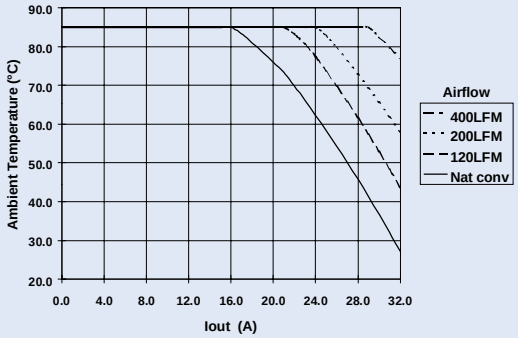


**Note A:** *Characteristic data has been developed from actual products tested at 25°C. This data is considered typical for the regulator.*
**Note B:** *Safe Operating Area curves represent conditions at which internal components are at or beow manufacturer's rated operating temperatures.*

## PACKAGING INFORMATION

| Orderable Device | Status (1) | Package Type | Package Drawing | Pins | Package Qty | Eco Plan (2) | Lead/Ball Finish | MSL Peak Temp (3) |
|---|---|---|---|---|---|---|---|---|
| PT7779C | NRND | SIP MODULE | EJC | 27 | 6 | TBD | Call TI | Level-1-215C-UNLIM |
| PT7779N | NRND | SIP MODULE | EJD | 27 | 8 | TBD | Call TI | Level-1-215C-UNLIM |
| PT7779N1 | NRND | SIP MODULE | EJD | 27 | 8 | TBD | Call TI | Level-1-215C-UNLIM |

(1) The marketing status values are defined as follows:
**ACTIVE:** Product device recommended for new designs.
**LIFEBUY:** TI has announced that the device will be discontinued, and a lifetime-buy period is in effect.
**NRND:** Not recommended for new designs. Device is in production to support existing customers, but TI does not recommend using this part in a new design.
**PREVIEW:** Device has been announced but is not in production. Samples may or may not be available.
**OBSOLETE:** TI has discontinued the production of the device.

(2) Eco Plan - The planned eco-friendly classification: Pb-Free (RoHS), Pb-Free (RoHS Exempt), or Green (RoHS & no Sb/Br) - please check http://www.ti.com/productcontent for the latest availability information and additional product content details.
**TBD:** The Pb-Free/Green conversion plan has not been defined.
**Pb-Free (RoHS):** TI's terms "Lead-Free" or "Pb-Free" mean semiconductor products that are compatible with the current RoHS requirements for all 6 substances, including the requirement that lead not exceed 0.1% by weight in homogeneous materials. Where designed to be soldered at high temperatures, TI Pb-Free products are suitable for use in specified lead-free processes.
**Pb-Free (RoHS Exempt):** This component has a RoHS exemption for either 1) lead-based flip-chip solder bumps used between the die and package, or 2) lead-based die adhesive used between the die and leadframe. The component is otherwise considered Pb-Free (RoHS compatible) as defined above.
**Green (RoHS & no Sb/Br):** TI defines "Green" to mean Pb-Free (RoHS compatible), and free of Bromine (Br) and Antimony (Sb) based flame retardants (Br or Sb do not exceed 0.1% by weight in homogeneous material)

(3) MSL, Peak Temp. -- The Moisture Sensitivity Level rating according to the JEDEC industry standard classifications, and peak solder temperature.

**Important Information and Disclaimer:**The information provided on this page represents TI's knowledge and belief as of the date that it is provided. TI bases its knowledge and belief on information provided by third parties, and makes no representation or warranty as to the accuracy of such information. Efforts are underway to better integrate information from third parties. TI has taken and continues to take reasonable steps to provide representative and accurate information but may not have conducted destructive testing or chemical analysis on incoming materials and chemicals. TI and TI suppliers consider certain information to be proprietary, and thus CAS numbers and other limited information may not be available for release.

In no event shall TI's liability arising out of such information exceed the total purchase price of the TI part(s) at issue in this document sold by TI to Customer on an annual basis.

## IMPORTANT NOTICE

Texas Instruments Incorporated and its subsidiaries (TI) reserve the right to make corrections, modifications, enhancements, improvements, and other changes to its products and services at any time and to discontinue any product or service without notice. Customers should obtain the latest relevant information before placing orders and should verify that such information is current and complete. All products are sold subject to TI's terms and conditions of sale supplied at the time of order acknowledgment.

TI warrants performance of its hardware products to the specifications applicable at the time of sale in accordance with TI's standard warranty. Testing and other quality control techniques are used to the extent TI deems necessary to support this warranty. Except where mandated by government requirements, testing of all parameters of each product is not necessarily performed.

TI assumes no liability for applications assistance or customer product design. Customers are responsible for their products and applications using TI components. To minimize the risks associated with customer products and applications, customers should provide adequate design and operating safeguards.

TI does not warrant or represent that any license, either express or implied, is granted under any TI patent right, copyright, mask work right, or other TI intellectual property right relating to any combination, machine, or process in which TI products or services are used. Information published by TI regarding third-party products or services does not constitute a license from TI to use such products or services or a warranty or endorsement thereof. Use of such information may require a license from a third party under the patents or other intellectual property of the third party, or a license from TI under the patents or other intellectual property of TI.

Reproduction of TI information in TI data books or data sheets is permissible only if reproduction is without alteration and is accompanied by all associated warranties, conditions, limitations, and notices. Reproduction of this information with alteration is an unfair and deceptive business practice. TI is not responsible or liable for such altered documentation. Information of third parties may be subject to additional restrictions.

Resale of TI products or services with statements different from or beyond the parameters stated by TI for that product or service voids all express and any implied warranties for the associated TI product or service and is an unfair and deceptive business practice. TI is not responsible or liable for any such statements.

TI products are not authorized for use in safety-critical applications (such as life support) where a failure of the TI product would reasonably be expected to cause severe personal injury or death, unless officers of the parties have executed an agreement specifically governing such use. Buyers represent that they have all necessary expertise in the safety and regulatory ramifications of their applications, and acknowledge and agree that they are solely responsible for all legal, regulatory and safety-related requirements concerning their products and any use of TI products in such safety-critical applications, notwithstanding any applications-related information or support that may be provided by TI. Further, Buyers must fully indemnify TI and its representatives against any damages arising out of the use of TI products in such safety-critical applications.

TI products are neither designed nor intended for use in military/aerospace applications or environments unless the TI products are specifically designated by TI as military-grade or "enhanced plastic." Only products designated by TI as military-grade meet military specifications. Buyers acknowledge and agree that any such use of TI products which TI has not designated as military-grade is solely at the Buyer's risk, and that they are solely responsible for compliance with all legal and regulatory requirements in connection with such use.

TI products are neither designed nor intended for use in automotive applications or environments unless the specific TI products are designated by TI as compliant with ISO/TS 16949 requirements. Buyers acknowledge and agree that, if they use any non-designated products in automotive applications, TI will not be responsible for any failure to meet such requirements.

Following are URLs where you can obtain information on other Texas Instruments products and application solutions:

| **Products** | | **Applications** | |
|---|---|---|---|
| Amplifiers | amplifier.ti.com | Audio | www.ti.com/audio |
| Data Converters | dataconverter.ti.com | Automotive | www.ti.com/automotive |
| DLP® Products | www.dlp.com | Broadband | www.ti.com/broadband |
| DSP | dsp.ti.com | Digital Control | www.ti.com/digitalcontrol |
| Clocks and Timers | www.ti.com/clocks | Medical | www.ti.com/medical |
| Interface | interface.ti.com | Military | www.ti.com/military |
| Logic | logic.ti.com | Optical Networking | www.ti.com/opticalnetwork |
| Power Mgmt | power.ti.com | Security | www.ti.com/security |
| Microcontrollers | microcontroller.ti.com | Telephony | www.ti.com/telephony |
| RFID | www.ti-rfid.com | Video & Imaging | www.ti.com/video |
| RF/IF and ZigBee® Solutions | www.ti.com/lprf | Wireless | www.ti.com/wireless |

Mailing Address: Texas Instruments, Post Office Box 655303, Dallas, Texas 75265
Copyright © 2009, Texas Instruments Incorporated