BURR-BROWN®

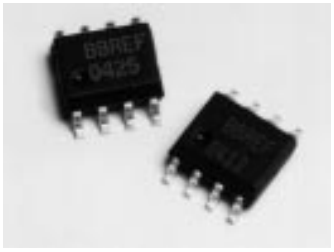

REF1004

1.2V and 2.5V Micropower VOLTAGE REFERENCE

FEATURES

- **INITIAL ACCURACY:**
  REF1004-1.2 ±4mV
  REF1004-2.5 ±20mV
- **MINIMUM OPERATING CURRENT:**
  REF1004-1.2 10μA
  REF1004-2.5 20μA
- **EXCELLENT LONG TERM TEMPERATURE STABILITY**
- **VERY LOW DYNAMIC IMPEDANCE**
- **OPERATES UP TO 20mA**
- **PACKAGE: 8-Lead SOIC**

APPLICATIONS

- **BATTERY POWERED TEST EQUIPMENT**
- **PORTABLE MEDICAL INSTRUMENTATION**
- **PORTABLE COMMUNICATIONS DEVICES**
- **A/D AND D/A CONVERTERS**
- **NOTEBOOK AND PALMTOP COMPUTERS**

DESCRIPTION

The REF1004-1.2 and REF1004-2.5 are two terminal bandgap reference diodes designed for high accuracy with outstanding temperature characteristics at low operating currents. Prior to the introduction of the REF1004 Micropower Voltage References, accuracy and stability specifications could only be attained by expensive screening of standard devices. The REF1004 is a cost effective solution when reference voltage accuracy, low power, and long term temperature stability are required.

REF1004 is a drop-in replacement for the LT1004 as well as an upgraded replacement of the LM185/385 series references. The REF1004C is characterized for operation from 0°C to 70°C and the REF1004I is characterized for operation from –40°C to +85°C.

The REF1004 is offered in an 8-lead Plastic SOIC package and shipped in anti-static rails or tape and reel.

Typical Operating Circuit

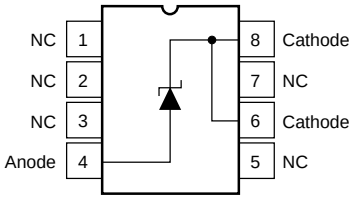

(Top View)

International Airport Industrial Park • Mailing Address: PO Box 11400 • Tucson, AZ 85734 • Street Address: 6730 S. Tucson Blvd. • Tucson, AZ 85706
Tel: (520) 746-1111 • Twx: 910-952-1111 • Cable: BBRCORP • Telex: 066-6491 • FAX: (520) 889-1510 • Immediate Product Info: (800) 548-6132

©1992 Burr-Brown Corporation
PDS-1172 Printed in U.S.A. October, 1993

SBVS002

SPECIFICATIONS

ELECTRICAL

T_A = +25°C unless otherwise noted.

PARAMETER	CONDITIONS	REF1004-1.2			REF1004-2.5			UNITS
		MIN	TYP	MAX	MIN	TYP	MAX	
REFERENCE VOLTAGE	I_R = 100µA	1.231	1.235	1.239	2.490	2.500	2.511	V
REF1004C[1]		1.229	1.235	1.239	2.487	2.500	2.511	
REF1004I[2]		1.225	1.235	1.239	2.480	2.500	2.511	
AVERAGE TEMPERATURE COEFFICIENT	$I_{MIN} \le I_R \le$ 20mA		20			20		ppm/°C
MINIMUM OPERATION CURRENT[3]			8	10		12	20	µA
REVERSE BREAKDOWN VOLTAGE CHANGE WITH CURRENT	$I_{MIN} \le I_R \le$ 1mA			1			1	mV
				1.5[3]			1.5[3]	
	1mA $\le I_R \le$ 20mA			10			10	
				20[3]			20[3]	
REVERSE DYNAMIC IMPEDANCE[3]	I_R = 100µA		0.2	0.6		0.2	0.6	Ω
WIDE BAND NOISE (RMS)	I_R = 100µA							
10Hz $\le I_R \le$ 10kHz			60			120		µV
LONG TERM STABILITY	I_R = 100µA							
T_A = 25°C ± 0.1°C			20			20		ppm/KHr

NOTES: (1) This specification applies over the full operating temperature range of 0°C $\le T_A \le$ 70°C. (2) This specification applies over the full operating temperature range of 40°C $\le T_A \le$ +85°C. (3) Denotes the specifications which apply over the full operating temperature range.

ORDERING INFORMATION

MODEL	T_A	V_Z	PACKAGE
REF1004C-1.2	0°C to +70°C	1.2V	8-Lead SOIC
REF1004C-2.5	0°C to +70°C	2.5V	8-Lead SOIC
REF1004I-1.2	–40°C to +85°C	1.2V	8-Lead SOIC
REF1004I-2.5	–40°C to +85°C	2.5V	8-Lead SOIC

NOTE: Available in Tape and Reel, Add –TR to Model Number.

ABSOLUTE MAXIMUM RATINGS

Reverse Breakdown Current 30mA
Forward Current 10mA
Operating Temperature Range
  REF1004C ..... 0°C to +70°C
  REF1004I ..... –40°C to +85°C
Storage Temperature
  REF1004C ..... –65°C to +150°C
  REF1004I ..... –65°C to +150°C
Lead Temperature (soldering, 10s) ..... +300°C

ORDERING INFORMATION

MODEL	PART MARKING
REF1004C-1.2	BBREF0412
REF1004C-2.5	BBREF0425
REF1004I-1.2	BBREF0412
REF1004I-2.5	BBREF0425

PACKAGE INFORMATION

MODEL	PACKAGE	PACKAGE DRAWING NUMBER[1]
REF1004C-1.2	8-Pin SOIC	182
REF1004C-2.5	8-Pin SOIC	182
REF1004I-1.2	8-Pin SOIC	182
REF1004I-2.5	8-Pin SOIC	182

NOTE: (1) For detailed drawing and dimension table, please see end of data sheet, or Appendix D of Burr-Brown IC Data Book.

The information provided herein is believed to be reliable; however, BURR-BROWN assumes no responsibility for inaccuracies or omissions. BURR-BROWN assumes no responsibility for the use of this information, and all use of such information shall be entirely at the user's own risk. Prices and specifications are subject to change without notice. No patent rights or licenses to any of the circuits described herein are implied or granted to any third party. BURR-BROWN does not authorize or warrant any BURR-BROWN product for use in life support devices and/or systems.

TYPICAL PERFORMANCE CURVES 1.2V

T_A = +25°C unless otherwise noted.

REVERSE CHARACTERISTICS

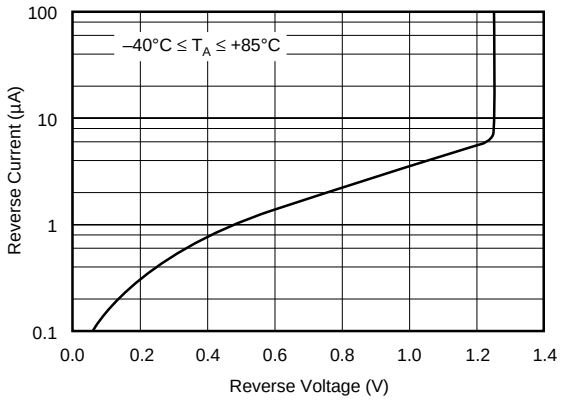

FORWARD CHARACTERISTICS

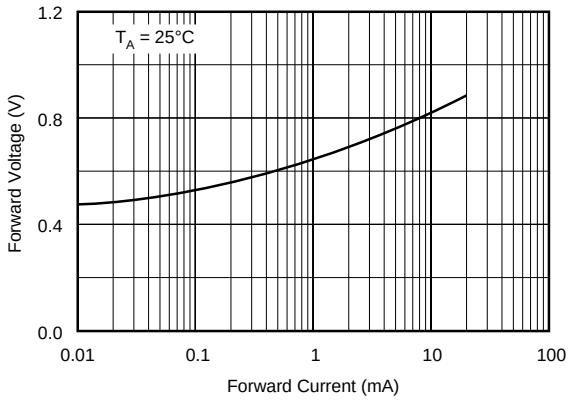

TEMPERATURE DRIFT

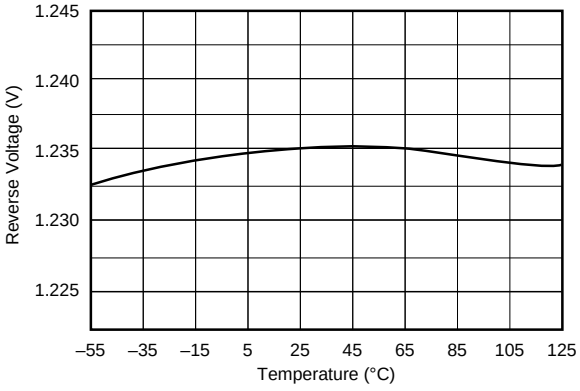

REVERSE VOLTAGE CHANGE

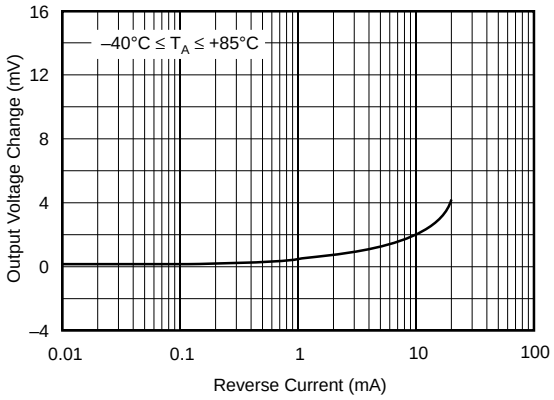

REVERSE DYNAMIC IMPEDANCE

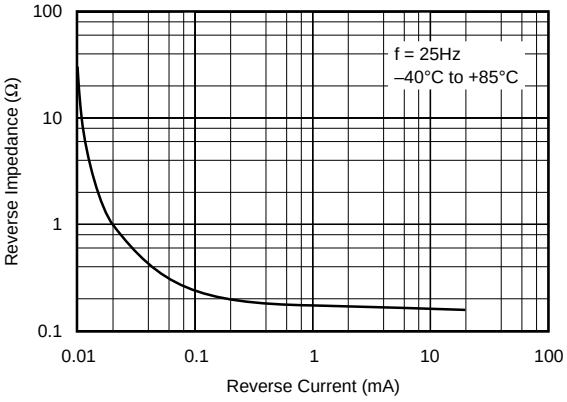

REVERSE DYNAMIC IMPEDANCE

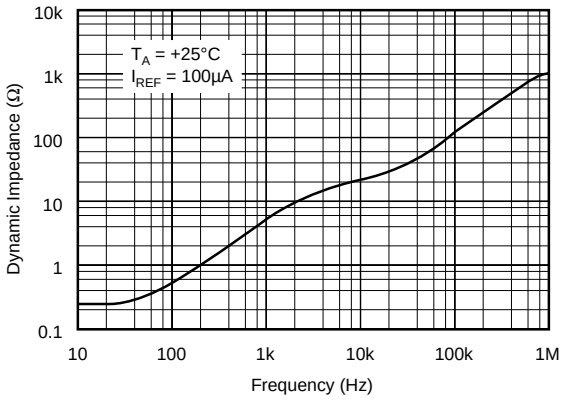

TYPICAL PERFORMANCE CURVES 1.2V (CONT)

T_A = +25°C unless otherwise noted.

NOISE VOLTAGE

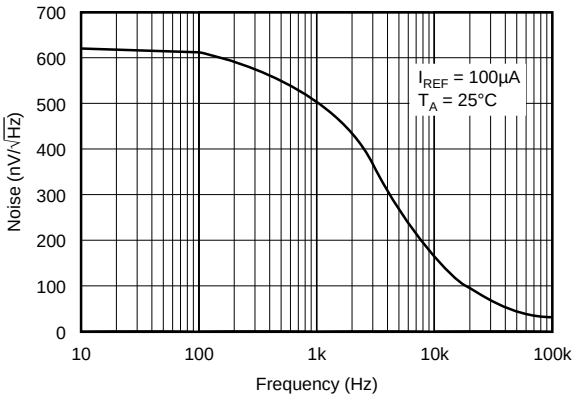

FILTERED OUTPUT NOISE

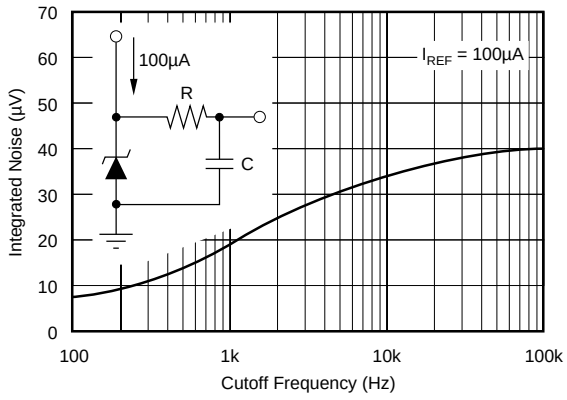

RESPONSE TIME

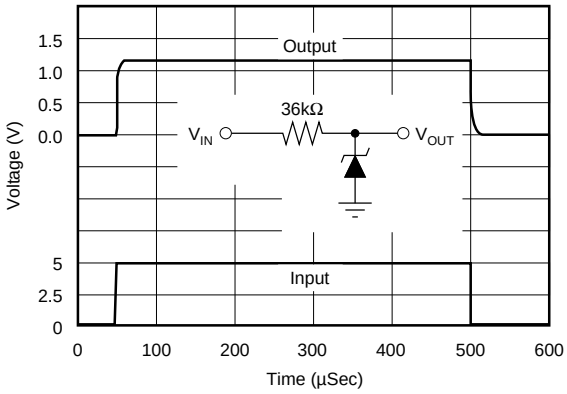

TYPICAL PERFORMANCE CURVES 2.5V

T_A = +25°C unless otherwise noted.

REVERSE CHARACTERISTICS

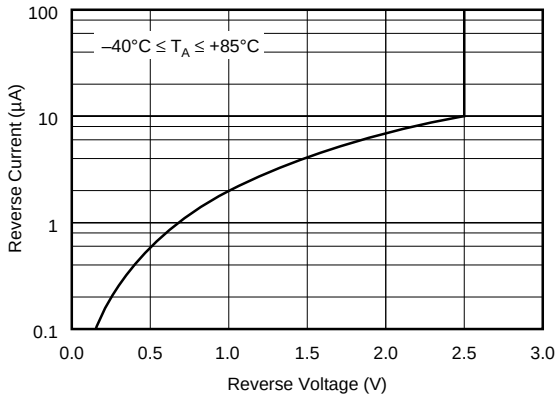

REVERSE VOLTAGE CHANGE

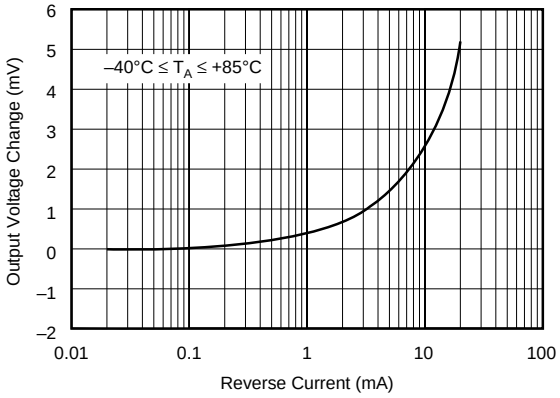

FORWARD CHARACTERISTICS

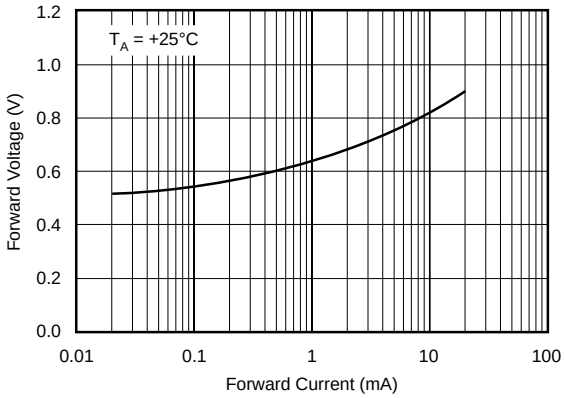

TEMPERATURE DRIFT

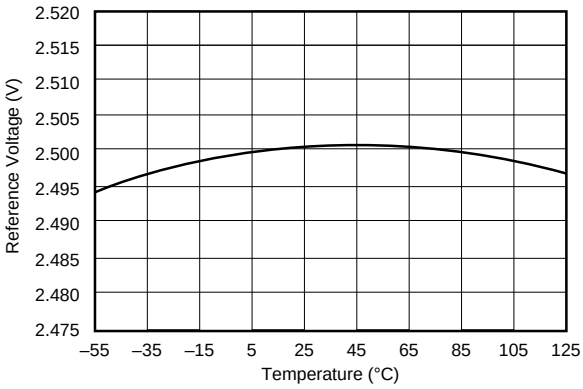

REVERSE DYNAMIC IMPEDANCE

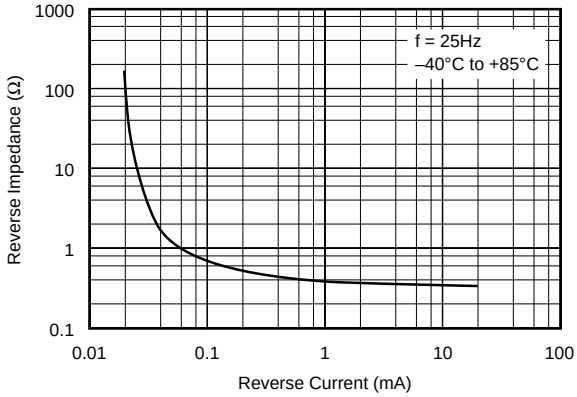

REVERSE DYNAMIC IMPEDANCE

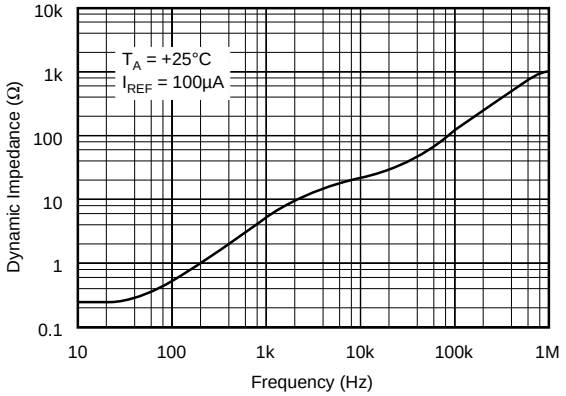

TYPICAL PERFORMANCE CURVES 2.5V (CONT)

T_A = +25°C unless otherwise noted.

NOISE VOLTAGE

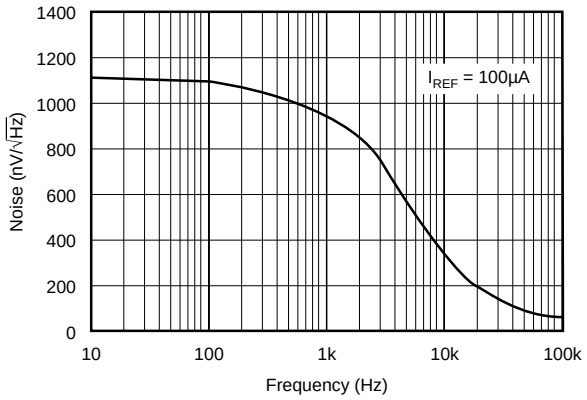

FILTERED OUTPUT NOISE

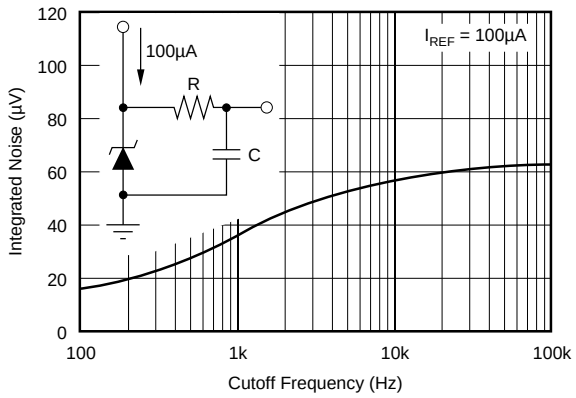

RESPONSE TIME

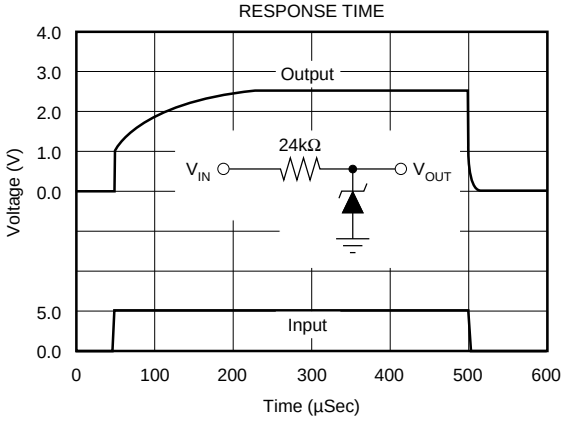

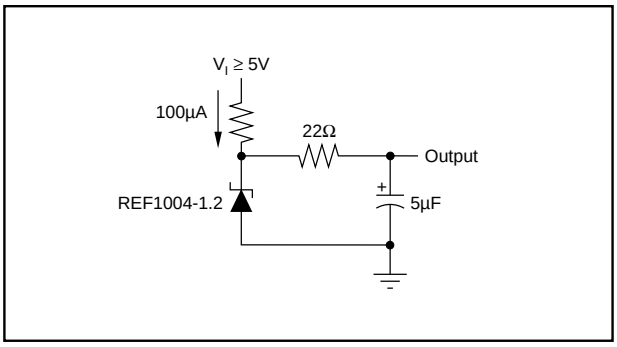

FIGURE 1. Low-Noise Reference.

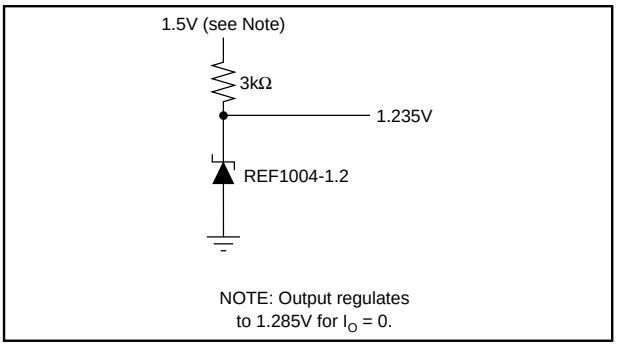

FIGURE 3. 1.2V Reference from 1.5V Battery.

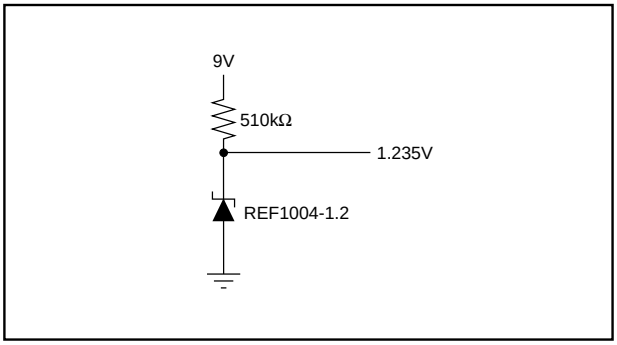

FIGURE2. Micropower Reference from 9V Battery.

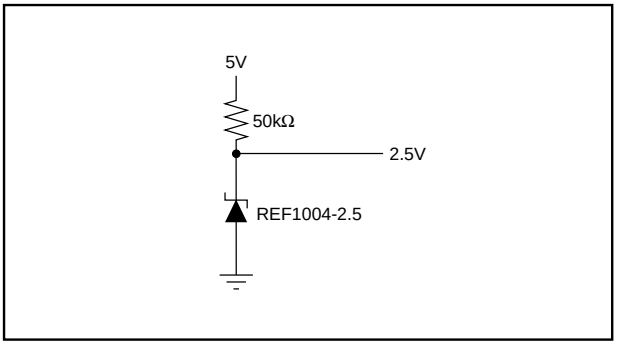

FIGURE 4. 2.5V Reference.

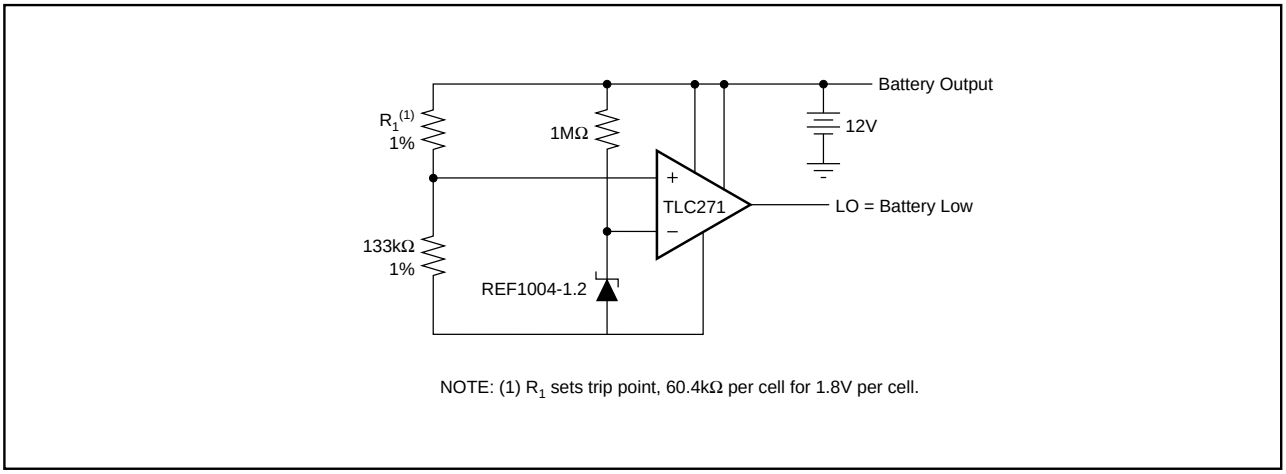

FIGURE 5. Lead-Acid Low-Battery-Voltage Detector.

PACKAGING INFORMATION

Orderable part number	Status (1)	Material type (2)	Package | Pins	Package qty | Carrier	RoHS (3)	Lead finish/ Ball material (4)	MSL rating/ Peak reflow (5)	Op temp (°C)	Part marking (6)
REF1004C-1.2	Active	Production	SOIC (D) | 8	75 | TUBE	Yes	NIPDAU	Level-3-260C-168 HR	0 to 70	REF 0412
REF1004C-1.2.A	Active	Production	SOIC (D) | 8	75 | TUBE	Yes	NIPDAU	Level-3-260C-168 HR	0 to 70	REF 0412
REF1004C-1.2/2K5	Active	Production	SOIC (D) | 8	2500 | LARGE T&R	Yes	NIPDAU	Level-3-260C-168 HR	0 to 70	REF 0412
REF1004C-1.2/2K5.A	Active	Production	SOIC (D) | 8	2500 | LARGE T&R	Yes	NIPDAU	Level-3-260C-168 HR	0 to 70	REF 0412
REF1004C-2.5	Active	Production	SOIC (D) | 8	75 | TUBE	Yes	NIPDAU	Level-3-260C-168 HR	0 to 70	REF 0425
REF1004C-2.5.A	Active	Production	SOIC (D) | 8	75 | TUBE	Yes	NIPDAU	Level-3-260C-168 HR	0 to 70	REF 0425
REF1004C-2.5/2K5	Active	Production	SOIC (D) | 8	2500 | LARGE T&R	Yes	NIPDAU	Level-3-260C-168 HR	0 to 70	REF 0425
REF1004C-2.5/2K5.A	Active	Production	SOIC (D) | 8	2500 | LARGE T&R	Yes	NIPDAU	Level-3-260C-168 HR	0 to 70	REF 0425
REF1004I-1.2	Active	Production	SOIC (D) | 8	75 | TUBE	Yes	NIPDAU	Level-3-260C-168 HR	-40 to 85	REF 0412
REF1004I-1.2.A	Active	Production	SOIC (D) | 8	75 | TUBE	Yes	NIPDAU	Level-3-260C-168 HR	-40 to 85	REF 0412
REF1004I-1.2/2K5	Active	Production	SOIC (D) | 8	2500 | LARGE T&R	Yes	NIPDAU	Level-3-260C-168 HR	-40 to 85	REF 0412
REF1004I-1.2/2K5.A	Active	Production	SOIC (D) | 8	2500 | LARGE T&R	Yes	NIPDAU	Level-3-260C-168 HR	-40 to 85	REF 0412
REF1004I-1.2E4	NRND	Production	SOIC (D) | 8	75 | TUBE	-	Call TI	Call TI	-40 to 85	
REF1004I-2.5	Active	Production	SOIC (D) | 8	75 | TUBE	Yes	NIPDAU	Level-3-260C-168 HR	-40 to 85	REF 0425
REF1004I-2.5.A	Active	Production	SOIC (D) | 8	75 | TUBE	Yes	NIPDAU	Level-3-260C-168 HR	-40 to 85	REF 0425
REF1004I-2.5/2K5	Active	Production	SOIC (D) | 8	2500 | LARGE T&R	Yes	NIPDAU	Level-3-260C-168 HR	-40 to 85	REF 0425
REF1004I-2.5/2K5.A	Active	Production	SOIC (D) | 8	2500 | LARGE T&R	Yes	NIPDAU	Level-3-260C-168 HR	-40 to 85	REF 0425

(1) **Status:** For more details on status, see our product life cycle.

(2) **Material type:** When designated, preproduction parts are prototypes/experimental devices, and are not yet approved or released for full production. Testing and final process, including without limitation quality assurance, reliability performance testing, and/or process qualification, may not yet be complete, and this item is subject to further changes or possible discontinuation. If available for ordering, purchases will be subject to an additional waiver at checkout, and are intended for early internal evaluation purposes only. These items are sold without warranties of any kind.

(3) **RoHS values:** Yes, No, RoHS Exempt. See the TI RoHS Statement for additional information and value definition.

(4) **Lead finish/Ball material:** Parts may have multiple material finish options. Finish options are separated by a vertical ruled line. Lead finish/Ball material values may wrap to two lines if the finish value exceeds the maximum column width.

(5) **MSL rating/Peak reflow:** The moisture sensitivity level ratings and peak solder (reflow) temperatures. In the event that a part has multiple moisture sensitivity ratings, only the lowest level per JEDEC standards is shown. Refer to the shipping label for the actual reflow temperature that will be used to mount the part to the printed circuit board.

(6) **Part marking:** There may be an additional marking, which relates to the logo, the lot trace code information, or the environmental category of the part.

Multiple part markings will be inside parentheses. Only one part marking contained in parentheses and separated by a "~" will appear on a part. If a line is indented then it is a continuation of the previous line and the two combined represent the entire part marking for that device.

Important Information and Disclaimer: The information provided on this page represents TI's knowledge and belief as of the date that it is provided. TI bases its knowledge and belief on information provided by third parties, and makes no representation or warranty as to the accuracy of such information. Efforts are underway to better integrate information from third parties. TI has taken and continues to take reasonable steps to provide representative and accurate information but may not have conducted destructive testing or chemical analysis on incoming materials and chemicals. TI and TI suppliers consider certain information to be proprietary, and thus CAS numbers and other limited information may not be available for release.

In no event shall TI's liability arising out of such information exceed the total purchase price of the TI part(s) at issue in this document sold by TI to Customer on an annual basis.

TAPE AND REEL INFORMATION

REEL DIMENSIONS

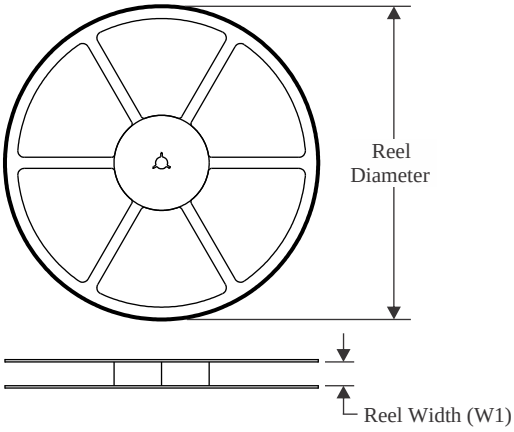

TAPE DIMENSIONS

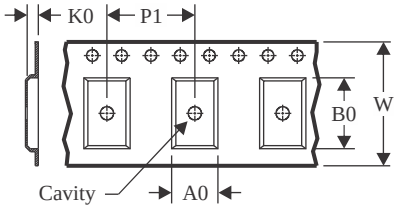

A0	Dimension designed to accommodate the component width
B0	Dimension designed to accommodate the component length
K0	Dimension designed to accommodate the component thickness
W	Overall width of the carrier tape
P1	Pitch between successive cavity centers

QUADRANT ASSIGNMENTS FOR PIN 1 ORIENTATION IN TAPE

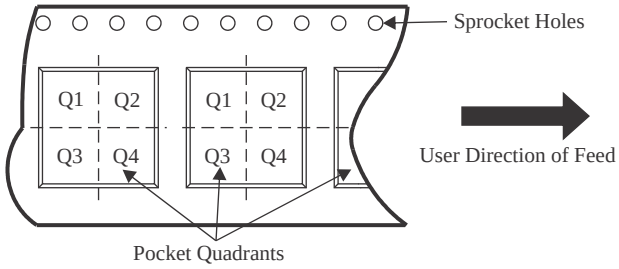

*All dimensions are nominal

Device	Package Type	Package Drawing	Pins	SPQ	Reel Diameter (mm)	Reel Width W1 (mm)	A0 (mm)	B0 (mm)	K0 (mm)	P1 (mm)	W (mm)	Pin1 Quadrant
REF1004C-1.2/2K5	SOIC	D	8	2500	330.0	12.4	6.4	5.2	2.1	8.0	12.0	Q1
REF1004C-2.5/2K5	SOIC	D	8	2500	330.0	12.4	6.4	5.2	2.1	8.0	12.0	Q1
REF1004I-1.2/2K5	SOIC	D	8	2500	330.0	12.4	6.4	5.2	2.1	8.0	12.0	Q1
REF1004I-2.5/2K5	SOIC	D	8	2500	330.0	12.4	6.4	5.2	2.1	8.0	12.0	Q1

TAPE AND REEL BOX DIMENSIONS

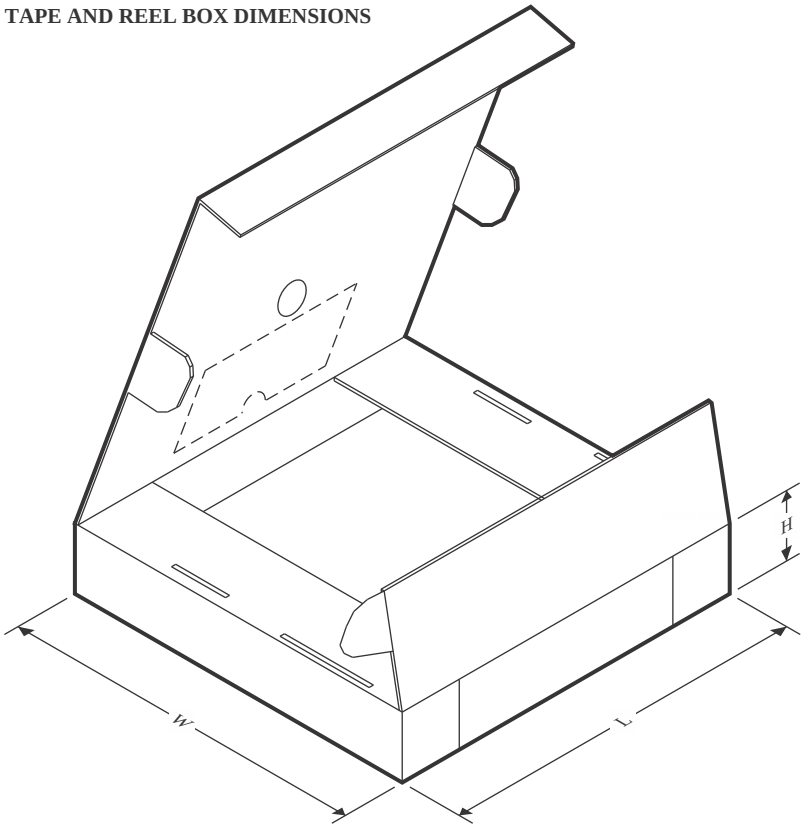

*All dimensions are nominal

Device	Package Type	Package Drawing	Pins	SPQ	Length (mm)	Width (mm)	Height (mm)
REF1004C-1.2/2K5	SOIC	D	8	2500	353.0	353.0	32.0
REF1004C-2.5/2K5	SOIC	D	8	2500	353.0	353.0	32.0
REF1004I-1.2/2K5	SOIC	D	8	2500	353.0	353.0	32.0
REF1004I-2.5/2K5	SOIC	D	8	2500	353.0	353.0	32.0

TUBE

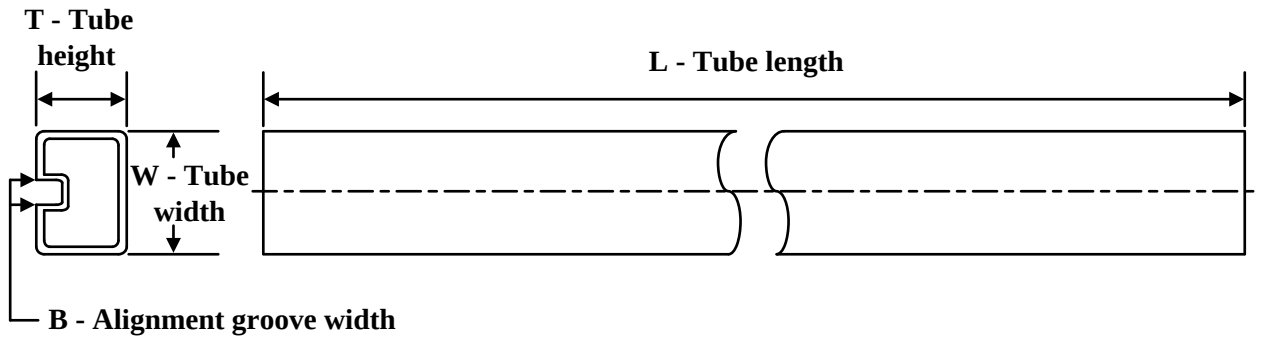

*All dimensions are nominal

Device	Package Name	Package Type	Pins	SPQ	L (mm)	W (mm)	T (µm)	B (mm)
REF1004C-1.2	D	SOIC	8	75	506.6	8	3940	4.32
REF1004C-1.2.A	D	SOIC	8	75	506.6	8	3940	4.32
REF1004C-2.5	D	SOIC	8	75	506.6	8	3940	4.32
REF1004C-2.5.A	D	SOIC	8	75	506.6	8	3940	4.32
REF1004I-1.2	D	SOIC	8	75	506.6	8	3940	4.32
REF1004I-1.2.A	D	SOIC	8	75	506.6	8	3940	4.32
REF1004I-2.5	D	SOIC	8	75	506.6	8	3940	4.32
REF1004I-2.5.A	D	SOIC	8	75	506.6	8	3940	4.32

IMPORTANT NOTICE AND DISCLAIMER

TI PROVIDES TECHNICAL AND RELIABILITY DATA (INCLUDING DATA SHEETS), DESIGN RESOURCES (INCLUDING REFERENCE DESIGNS), APPLICATION OR OTHER DESIGN ADVICE, WEB TOOLS, SAFETY INFORMATION, AND OTHER RESOURCES “AS IS” AND WITH ALL FAULTS, AND DISCLAIMS ALL WARRANTIES, EXPRESS AND IMPLIED, INCLUDING WITHOUT LIMITATION ANY IMPLIED WARRANTIES OF MERCHANTABILITY, FITNESS FOR A PARTICULAR PURPOSE OR NON-INFRINGEMENT OF THIRD PARTY INTELLECTUAL PROPERTY RIGHTS.

These resources are intended for skilled developers designing with TI products. You are solely responsible for (1) selecting the appropriate TI products for your application, (2) designing, validating and testing your application, and (3) ensuring your application meets applicable standards, and any other safety, security, regulatory or other requirements.

These resources are subject to change without notice. TI grants you permission to use these resources only for development of an application that uses the TI products described in the resource. Other reproduction and display of these resources is prohibited. No license is granted to any other TI intellectual property right or to any third party intellectual property right. TI disclaims responsibility for, and you will fully indemnify TI and its representatives against, any claims, damages, costs, losses, and liabilities arising out of your use of these resources.

TI’s products are provided subject to TI’s Terms of Sale or other applicable terms available either on ti.com or provided in conjunction with such TI products. TI’s provision of these resources does not expand or otherwise alter TI’s applicable warranties or warranty disclaimers for TI products.

TI objects to and rejects any additional or different terms you may have proposed.

Mailing Address: Texas Instruments, Post Office Box 655303, Dallas, Texas 75265
Copyright © 2025, Texas Instruments Incorporated