# SN65C3238E, SN75C3238E
# 3-V TO 5.5-V MULTICHANNEL RS-232 LINE DRIVERS/RECEIVERS WITH ±15-kV ESD (HBM) PROTECTION

SLLS726 – MAY 2006

PRODUCT PREVIEW

## FEATURES

- **RS-232 Bus-Pin ESD Protection Exceeds ±15 kV Using Human-Body Model (HBM)**
- **Meet or Exceed the Requirements of TIA/EIA-232-F and ITU v.28 Standards**
- **Operate With 3-V to 5.5-V $V_{CC}$ Supply**
- **Operate up to 1000 kbit/s**
- **Five Drivers and Three Receivers**
- **Auto-Powerdown Plus Feature Enables Flexible Power-Down Mode**
- **Low Standby Current . . . 1 μA Typical**
- **External Capacitors . . . 4 × 0.1 μF**
- **Accept 5-V Logic Input With 3.3-V Supply**
- **Always-Active Noninverting Receiver Output (ROUT1B)**
- **ESD Protection for RS-232 Interface Pins**
  - **– ±15 kV – Human-Body Model (HBM)**
  - **– ±8 kV – IEC61000-4-2, Contact Discharge**
  - **– ±15 kV – IEC61000-4-2, Air-Gap Discharge**

## APPLICATIONS

- **Battery-Powered Systems**
- **PDAs**
- **Notebooks**
- **Subnotebooks**
- **Laptops**
- **Palmtop PCs**
- **Hand-Held Equipment**
- **Modems**
- **Printers**

**DB, DW, OR PW PACKAGE**
**(TOP VIEW)**

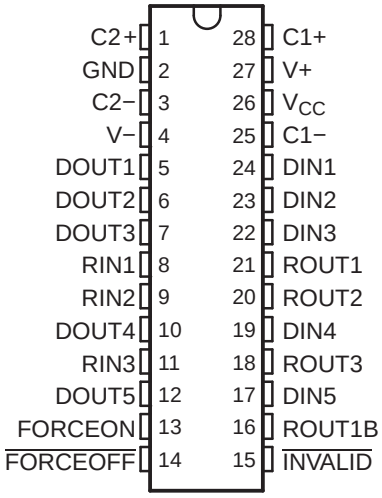


**RHB PACKAGE**
**(TOP VIEW)**

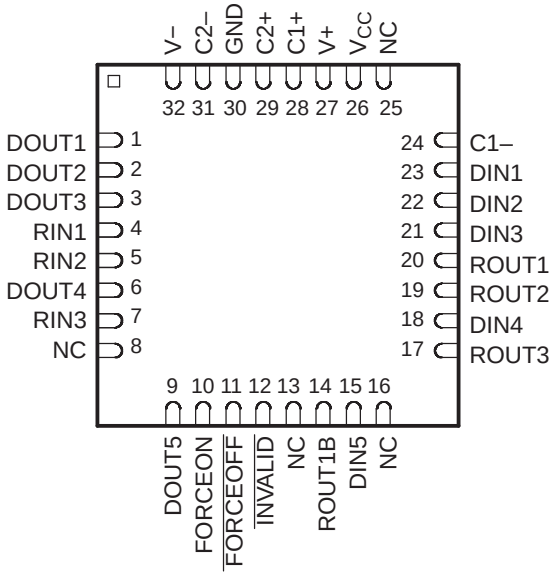


## DESCRIPTION/ORDERING INFORMATION

The SN65C3238E and SN75C3238E consist of five line drivers, three line receivers, and a dual charge-pump circuit with ±15-kV ESD (HBM) protection on the driver output (DOUT) and receiver input (RIN) terminals. The devices meet the requirements of TIA/EIA-232-F and provide the electrical interface between notebook and subnotebook computer applications. The charge pump and four small external capacitors allow operation from a single 3-V to 5.5-V supply. In addition, the devices include an always-active noninverting output (ROUT1B), which allows applications using the ring indicator to transmit data while the device is powered down. These devices operate at data signaling rates up to 1000 kbit/s.

Please be aware that an important notice concerning availability, standard warranty, and use in critical applications of Texas Instruments semiconductor products and disclaimers thereto appears at the end of this data sheet.

PRODUCT PREVIEW information concerns products in the formative or design phase of development. Characteristic data and other specifications are design goals. Texas Instruments reserves the right to change or discontinue these products without notice.

Copyright © 2006, Texas Instruments Incorporated

## DESCRIPTION/ORDERING INFORMATION (CONTINUED)

Flexible control options for power management are featured when the serial port and driver inputs are inactive. The auto-powerdown plus feature functions when FORCEON is low and $\overline{\text{FORCEOFF}}$ is high. During this mode of operation, if the devices do not sense valid signal transitions on all receiver and driver inputs for approximately 30 s, the built-in charge pump and drivers are powered down, reducing the supply current to 1 µA. By disconnecting the serial port or placing the peripheral drivers off, auto-powerdown plus occurs if there is no activity in the logic levels for the driver inputs. Auto-powerdown plus can be disabled when FORCEON and $\overline{\text{FORCEOFF}}$ are high. With auto-powerdown plus enabled, the devices activate automatically when a valid signal is applied to any receiver or driver input. $\overline{\text{INVALID}}$ is high (valid data) if any receiver input voltage is greater than 2.7 V or less than –2.7 V, or has been between –0.3 V and 0.3 V for less than 30 µs. $\overline{\text{INVALID}}$ is low (invalid data) if all receiver input voltages are between –0.3 V and 0.3 V for more than 30 µs. Refer to Figure 5 for receiver input levels.

### ORDERING INFORMATION

| $T_A$ | PACKAGE(1) | | ORDERABLE PART NUMBER | TOP-SIDE MARKING |
|---|---|---|---|---|
| 0°C to 70°C | SSOP – DB | Tube of 50 | SN75C3238EDB | 75C3238E |
| | | Reel of 2000 | SN75C3238EDBR | |
| | TSSOP – PW | Tube of 50 | SN75C3238EPW | Preview |
| | | Reel of 2000 | SN75C3238EPWR | |
| | SOIC – DW | Tube of 50 | SN75C3238EDW | 75C3238E |
| | | Reel of 2000 | SN75C3238EDWR | |
| | QFN – RHB | Reel of 2000 | SN75C3238ECRHBR | Preview |
| –40°C to 85°C | SSOP – DB | Tube of 50 | SN65C3238EDB | 65C3238E |
| | | Reel of 2000 | SN65C3238EDBR | |
| | TSSOP – PW | Tube of 50 | SN65C3238EPW | Preview |
| | | Reel of 2000 | SN65C3238EPWR | |
| | SOIC – DW | Tube of 50 | SN65C3238EDW | 65C3238E |
| | | Reel of 2000 | SN65C3238EDWR | |
| | QFN – RHB | Reel of 2000 | SN65C3238EIRHBR | Preview |

(1) Package drawings, standard packing quantities, thermal data, symbolization, and PCB design guidelines are available at www.ti.com/sc/package.

PRODUCT PREVIEW

## FUNCTION TABLES

### Each Driver(1)

| INPUTS | | | | OUTPUT | DRIVER STATUS |
|---|---|---|---|---|---|
| DIN | FORCEON | $\overline{\text{FORCEOFF}}$ | TIME ELAPSED SINCE LAST RIN OR DIN TRANSITION | DOUT | |
| X | X | L | X | Z | Powered off |
| L | H | H | X | H | Normal operation with auto-powerdown plus disabled |
| H | H | H | X | L | |
| L | L | H | <30 s | H | Normal operation with auto-powerdown plus enabled |
| H | L | H | <30 s | L | |
| L | L | H | >30 s | Z | Powered off by auto-powerdown plus feature |
| H | L | H | >30 s | Z | |

(1) H = high level, L = low level, X = irrelevant, Z = high impedance

### Each Receiver(1)

| INPUTS | | | | OUTPUTS | | RECEIVER STATUS |
|---|---|---|---|---|---|---|
| RIN1 | RIN2–RIN3 | $\overline{\text{FORCEOFF}}$ | TIME ELAPSED SINCE LAST RIN OR DIN TRANSITION | ROUT1B | ROUT2 AND ROUT3 | |
| L | X | L | X | L | Z | Powered off while ROUT1B is active |
| H | X | L | X | H | Z | |
| L | L | H | <30 s | L | H | Normal operation with auto-powerdown plus disabled/enabled |
| L | H | H | <30 s | L | L | |
| H | L | H | <30 s | H | H | |
| H | H | H | <30 s | H | L | |
| Open | Open | H | <30 s | L | H | |

(1) H = high level, L = low level, X = irrelevant, Z = high impedance (off), Open = input disconnected or connected driver off

PRODUCT PREVIEW

TEXAS INSTRUMENTS
www.ti.com

PRODUCT PREVIEW

## LOGIC DIAGRAM (POSITIVE LOGIC)

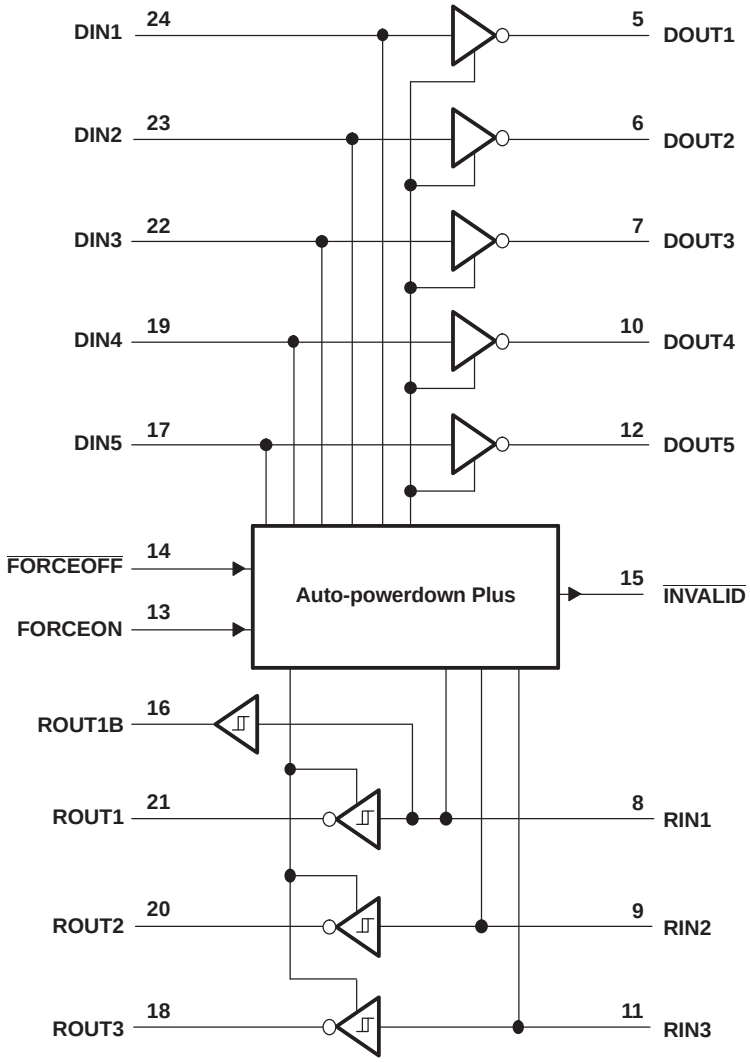

## Absolute Maximum Ratings(1)

over operating free-air temperature range (unless otherwise noted)

| | | | MIN | MAX | UNIT |
|---|---|---|---|---|---|
| $V_{CC}$ | Supply voltage range(2) | | –0.3 | 6 | V |
| V+ | Positive-output supply voltage range(2) | | –0.3 | 7 | V |
| V– | Negative-output supply voltage range(2) | | 0.3 | –7 | V |
| V+ – V– | Supply voltage difference(2) | | | 13 | V |
| $V_I$ | Input voltage range | Driver ($\overline{\text{FORCEOFF}}$, FORCEON) | –0.3 | 6 | V |
| | | Receiver | –25 | 25 | |
| $V_O$ | Output voltage range | Driver | –13.2 | 13.2 | V |
| | | Receiver ($\overline{\text{INVALID}}$) | –0.3 | $V_{CC}$ + 0.3 | |
| $\theta_{JA}$ | Package thermal impedance(3)(4) | DB package | | 62 | °C/W |
| | | DW package | | 46 | |
| | | PW package | | 62 | |
| | | RHB package | | TBD | |
| $T_J$ | Operating virtual junction temperature | | | 150 | °C |
| $T_{stg}$ | Storage temperature range | | –65 | 150 | °C |

(1) Stresses beyond those listed under "absolute maximum ratings" may cause permanent damage to the device. These are stress ratings only, and functional operation of the device at these or any other conditions beyond those indicated under "recommended operating conditions" is not implied. Exposure to absolute-maximum-rated conditions for extended periods may affect device reliability.
(2) All voltages are with respect to network GND.
(3) Maximum power dissipation is a function of $T_J(max)$, $\theta_{JA}$, and $T_A$. The maximum allowable power dissipation at any allowable ambient temperature is $P_D = (T_J(max) – T_A)/\theta_{JA}$. Operating at the absolute maximum $T_J$ of 150°C can affect reliability.
(4) The package thermal impedance is calculated in accordance with JESD 51-7.

## Recommended Operating Conditions(1)

See Figure 6

| | | | | MIN | NOM | MAX | UNIT |
|---|---|---|---|---|---|---|---|
| | Supply voltage | | $V_{CC}$ = 3.3 V | 3 | 3.3 | 3.6 | V |
| | | | $V_{CC}$ = 5 V | 4.5 | 5 | 5.5 | |
| $V_{IH}$ | Driver and control high-level input voltage | DIN, $\overline{\text{FORCEOFF}}$, FORCEON | $V_{CC}$ = 3.3 V | 2 | | 5.5 | V |
| | | | $V_{CC}$ = 5 V | 2.4 | | 5.5 | |
| $V_{IL}$ | Driver and control low-level input voltage | DIN, $\overline{\text{FORCEOFF}}$, FORCEON | | 0 | | 0.8 | V |
| $V_I$ | Receiver input voltage | | | –25 | | 25 | V |
| $T_A$ | Operating free-air temperature | | SN75C3238E | 0 | | 70 | °C |
| | | | SN65C3238E | –40 | | 85 | |

(1) Testing supply conditions are C1–C4 = 0.1 µF at $V_{CC}$ = 3.3 V ± 0.15 V; C1–C4 = 0.22 µF at $V_{CC}$ = 3.3 V ± 0.3 V; and C1 = 0.047 µF and C2–C4 = 0.33 µF at $V_{CC}$ = 5 V ± 0.5 V.

## Electrical Characteristics(1)

over recommended ranges of supply voltage and operating free-air temperature (unless otherwise noted) (see Figure 6)

| PARAMETER | | | TEST CONDITIONS | MIN | TYP(2) | MAX | UNIT |
|---|---|---|---|---|---|---|---|
| $I_I$ | Input leakage current | $\overline{\text{FORCEOFF}}$, FORCEON | | | ±0.01 | ±1 | µA |
| $I_{CC}$ | Supply current ($T_A$ = 25°C) | Auto-powerdown plus disabled | No load, $\overline{\text{FORCEOFF}}$ and FORCEON at $V_{CC}$ | | 0.5 | 2 | mA |
| | | Powered off | No load, $\overline{\text{FORCEOFF}}$ at GND | | 1 | 10 | µA |
| | | Auto-powerdown plus enabled | No load, $\overline{\text{FORCEOFF}}$ at $V_{CC}$, FORCEON at GND, All RIN are open or grounded | | 1 | 10 | |

(1) Testing supply conditions are C1–C4 = 0.1 µF at $V_{CC}$ = 3.3 V ± 0.15 V; C1–C4 = 0.22 µF at $V_{CC}$ = 3.3 V ± 0.3 V; and C1 = 0.047 µF and C2–C4 = 0.33 µF at $V_{CC}$ = 5 V ± 0.5 V.
(2) All typical values are at $V_{CC}$ = 3.3 V or $V_{CC}$ = 5 V, and $T_A$ = 25°C.

PRODUCT PREVIEW

PRODUCT PREVIEW

## DRIVER SECTION

### Electrical Characteristics(1)

over recommended ranges of supply voltage and operating free-air temperature (unless otherwise noted) (see Figure 6)

| PARAMETER | | TEST CONDITIONS | | | MIN | TYP(2) | MAX | UNIT |
|---|---|---|---|---|---|---|---|---|
| $V_{OH}$ | High-level output voltage | All DOUT at $R_L$ = 3 kΩ to GND | | | 5 | 5.4 | | V |
| $V_{OL}$ | Low-level output voltage | All DOUT at $R_L$ = 3 kΩ to GND | | | –5 | –5.4 | | V |
| $I_{IH}$ | High-level input current | $V_I = V_{CC}$ | | | | ±0.01 | ±1 | µA |
| $I_{IL}$ | Low-level input current | $V_I$ at GND | | | | ±0.01 | ±1 | µA |
| $I_{OS}$ | Short-circuit output current(3) | $V_{CC}$ = 3.6 V, | $V_O$ = 0 V | | | ±35 | ±60 | mA |
| | | $V_{CC}$ = 5.5 V, | $V_O$ = 0 V | | | ±40 | ±100 | |
| $r_o$ | Output resistance | $V_{CC}$, V+, and V– = 0 V, | $V_O$ = ±2 V | | 300 | 10M | | Ω |
| $I_{OZ}$ | Output leakage current | $\overline{\text{FORCEOFF}}$ = GND | $V_O$ = ±12 V, | $V_{CC}$ = 3 V to 3.6 V | | | ±25 | µA |
| | | | $V_O$ = ±10 V, | $V_{CC}$ = 4.5 V to 5.5 V | | | ±25 | |

(1) Testing supply conditions are C1–C4 = 0.1 µF at $V_{CC}$ = 3.3 V ± 0.15 V; C1–C4 = 0.22 µF at $V_{CC}$ = 3.3 V ± 0.3 V; and C1 = 0.047 µF and C2–C4 = 0.33 µF at $V_{CC}$ = 5 V ± 0.5 V.
(2) All typical values are at $V_{CC}$ = 3.3 V or $V_{CC}$ = 5 V, and $T_A$ = 25°C.
(3) Short-circuit durations should be controlled to prevent exceeding the device absolute power dissipation ratings, and not more than one output should be shorted at a time.

### Switching Characteristics(1)

over recommended ranges of supply voltage and operating free-air temperature (unless otherwise noted) (see Figure 6)

| PARAMETER | | TEST CONDITIONS | | | MIN | TYP(2) | MAX | UNIT |
|---|---|---|---|---|---|---|---|---|
| | Maximum data rate (see Figure 1) | $R_L$ = 3 kΩ, One DOUT switching | $C_L$ = 1000 pF | | 250 | | | kbit/s |
| | | | $C_L$ = 250 pF, | $V_{CC}$ = 3 V to 4.5 V | 1000 | | | |
| | | | $C_L$ = 1000 pF, | $V_{CC}$ = 4.5 V to 5.5 V | 1000 | | | |
| $t_{sk(p)}$ | Pulse skew(3) | $C_L$ = 150 pF to 2500 pF, | $R_L$ = 3 kΩ to 7 kΩ, | See Figure 2 | | 25 | | ns |
| SR(tr) | Slew rate, transition region (see Figure 1) | $C_L$ = 150 pF to 1000 pF, | $R_L$ = 3 kΩ to 7 kΩ, | $V_{CC}$ = 3.3 V | 18 | | 150 | V/µs |

(1) Testing supply conditions are C1–C4 = 0.1 µF at $V_{CC}$ = 3.3 V ± 0.15 V; C1–C4 = 0.22 µF at $V_{CC}$ = 3.3 V ± 0.3 V; and C1 = 0.047 µF and C2–C4 = 0.33 µF at $V_{CC}$ = 5 V ± 0.5 V.
(2) All typical values are at $V_{CC}$ = 3.3 V or $V_{CC}$ = 5 V, and $T_A$ = 25°C.
(3) Pulse skew is defined as $|t_{PLH} - t_{PHL}|$ of each channel of the same device.

### ESD Protection

| PARAMETER | TEST CONDITIONS | TYP | UNIT |
|---|---|---|---|
| DOUT | HBM | ±15 | kV |
| | IEC 61000-4-2, Air-Gap Discharge | ±15 | |
| | IEC 61000-4-2, Contact Discharge | ±8 | |

## RECEIVER SECTION

### Electrical Characteristics(1)

over recommended ranges of supply voltage and operating free-air temperature (unless otherwise noted) (see Figure 6)

| PARAMETER | | TEST CONDITIONS | MIN | TYP(2) | MAX | UNIT |
|---|---|---|---|---|---|---|
| $V_{OH}$ | High-level output voltage | $I_{OH}$ = –1 mA | $V_{CC}$ – 0.6 | $V_{CC}$ – 0.1 | | V |
| $V_{OL}$ | Low-level output voltage | $I_{OL}$ = 1.6 mA | | | 0.4 | V |
| $V_{IT+}$ | Positive-going input threshold voltage | $V_{CC}$ = 3.3 V | | 1.5 | 2.4 | V |
| | | $V_{CC}$ = 5 V | | 1.8 | 2.4 | |
| $V_{IT–}$ | Negative-going input threshold voltage | $V_{CC}$ = 3.3 V | 0.6 | 1.2 | | V |
| | | $V_{CC}$ = 5 V | 0.8 | 1.5 | | |
| $V_{hys}$ | Input hysteresis ($V_{IT+} – V_{IT–}$) | | | 0.3 | | V |
| $I_{OZ}$ | Output leakage current (except ROUT1B) | $\overline{FORCEOFF}$ = 0 V | | ±0.05 | ±10 | µA |
| $r_i$ | Input resistance | $V_I$ = ±3 V to ±25 V | 3 | 5 | 7 | kΩ |

(1) Testing supply conditions are C1–C4 = 0.1 µF at $V_{CC}$ = 3.3 V ± 0.15 V; C1–C4 = 0.22 µF at $V_{CC}$ = 3.3 V ± 0.3 V; and C1 = 0.047 µF and C2–C4 = 0.33 µF at $V_{CC}$ = 5 V ± 0.5 V.
(2) All typical values are at $V_{CC}$ = 3.3 V or $V_{CC}$ = 5 V, and $T_A$ = 25°C.

### Switching Characteristics(1)

over recommended ranges of supply voltage and operating free-air temperature (unless otherwise noted)

| PARAMETER | | TEST CONDITIONS | TYP(2) | UNIT |
|---|---|---|---|---|
| $t_{PLH}$ | Propagation delay time, low- to high-level output | $C_L$ = 150 pF, See Figure 3 | 150 | ns |
| $t_{PHL}$ | Propagation delay time, high- to low-level output | $C_L$ = 150 pF, See Figure 3 | 150 | ns |
| $t_{en}$ | Output enable time | $C_L$ = 150 pF, $R_L$ = 3 kΩ, See Figure 4 | 200 | ns |
| $t_{dis}$ | Output disable time | $C_L$ = 150 pF, $R_L$ = 3 kΩ, See Figure 4 | 200 | ns |
| $t_{sk(p)}$ | Pulse skew(3) | See Figure 3 | 50 | ns |

(1) Testing supply conditions are C1–C4 = 0.1 µF at $V_{CC}$ = 3.3 V ± 0.15 V; C1–C4 = 0.22 µF at $V_{CC}$ = 3.3 V ± 0.3 V; and C1 = 0.047 µF and C2–C4 = 0.33 µF at $V_{CC}$ = 5 V ± 0.5 V.
(2) All typical values are at $V_{CC}$ = 3.3 V or $V_{CC}$ = 5 V, and $T_A$ = 25°C.
(3) Pulse skew is defined as $|t_{PLH} – t_{PHL}|$ of each channel of the same device.

### ESD Protection

| PARAMETER | TEST CONDITIONS | TYP | UNIT |
|---|---|---|---|
| RIN | HBM | ±15 | kV |
| | IEC 61000-4-2, Air-Gap Discharge | ±15 | |
| | IEC 61000-4-2, Contact Discharge | ±8 | |

PRODUCT PREVIEW

## AUTO-POWERDOWN PLUS SECTION

### Electrical Characteristics

over recommended ranges of supply voltage and operating free-air temperature (unless otherwise noted) (see Figure 5)

| PARAMETER | | TEST CONDITIONS | MIN | MAX | UNIT |
|---|---|---|---|---|---|
| $V_{T+(valid)}$ | Receiver input threshold for $\overline{INVALID}$ high-level output voltage | FORCEON = GND, $\overline{FORCEOFF}$ = $V_{CC}$ | | 2.7 | V |
| $V_{T-(valid)}$ | Receiver input threshold for $\overline{INVALID}$ high-level output voltage | FORCEON = GND, $\overline{FORCEOFF}$ = $V_{CC}$ | –2.7 | | V |
| $V_{T(invalid)}$ | Receiver input threshold for $\overline{INVALID}$ low-level output voltage | FORCEON = GND, $\overline{FORCEOFF}$ = $V_{CC}$ | –0.3 | 0.3 | V |
| $V_{OH}$ | $\overline{INVALID}$ high-level output voltage | $I_{OH}$ = –1 mA, FORCEON = GND, $\overline{FORCEOFF}$ = $V_{CC}$ | $V_{CC}$ – 0.6 | | V |
| $V_{OL}$ | $\overline{INVALID}$ low-level output voltage | $I_{OL}$ = 1.6 mA, FORCEON = GND, $\overline{FORCEOFF}$ = $V_{CC}$ | | 0.4 | V |

### Switching Characteristics

over recommended ranges of supply voltage and operating free-air temperature (unless otherwise noted) (see Figure 5)

| PARAMETER | | MIN | TYP(1) | MAX | UNIT |
|---|---|---|---|---|---|
| $t_{valid}$ | Propagation delay time, low- to high-level output | | 0.1 | | µs |
| $t_{invalid}$ | Propagation delay time, high- to low-level output | | 50 | | µs |
| $t_{en}$ | Supply enable time | | 25 | | µs |
| $t_{dis}$ | Receiver or driver edge to auto-powerdown plus | 15 | 30 | 60 | s |

(1) All typical values are at $V_{CC}$ = 3.3 V or $V_{CC}$ = 5 V, and $T_A$ = 25°C.

PRODUCT PREVIEW

## PARAMETER MEASUREMENT INFORMATION

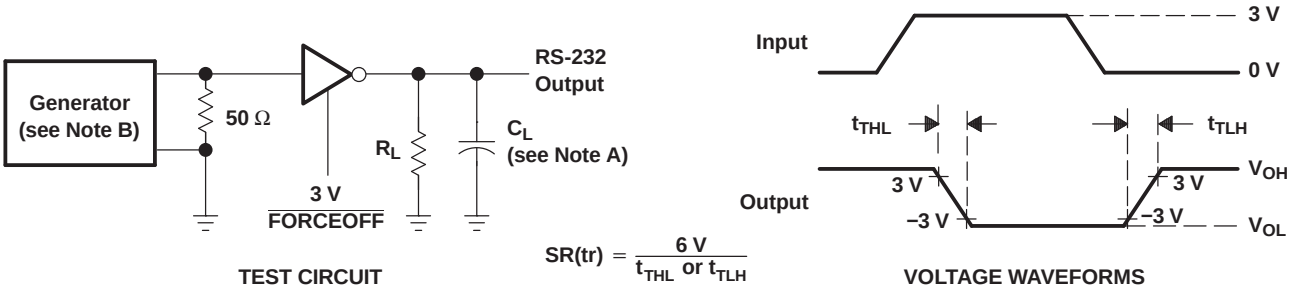


A. $C_L$ includes probe and jig capacitance.

B. The pulse generator has the following characteristics: PRR = 250 kbit/s, $Z_O$ = 50 Ω, 50% duty cycle, $t_r \le 10$ ns, $t_f \le 10$ ns.

**Figure 1. Driver Slew Rate**

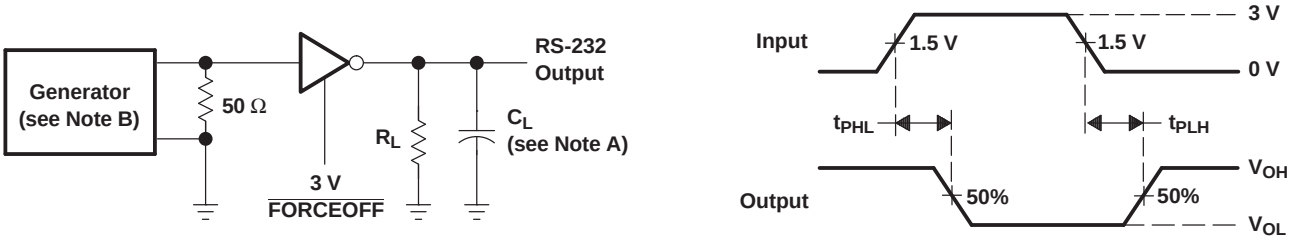


A. $C_L$ includes probe and jig capacitance.

B. The pulse generator has the following characteristics: PRR = 250 kbit/s, $Z_O$ = 50 Ω, 50% duty cycle, $t_r \le 10$ ns, $t_f \le 10$ ns.

**Figure 2. Driver Pulse Skew**

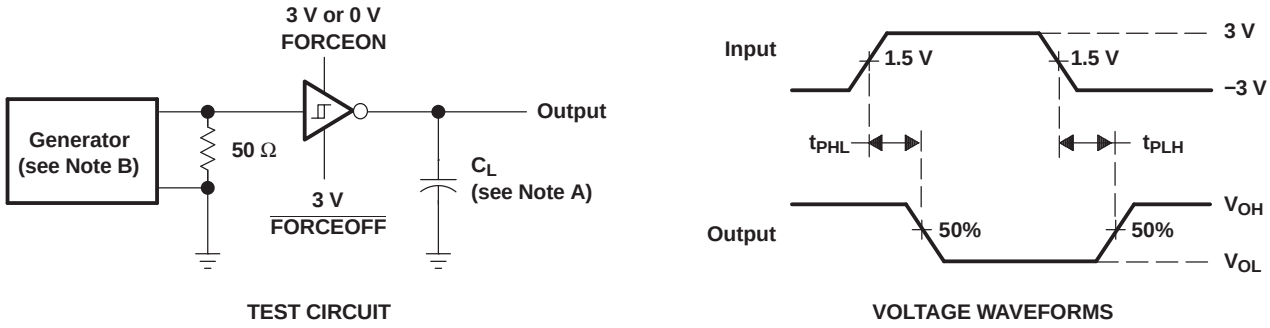


A. $C_L$ includes probe and jig capacitance.

B. The pulse generator has the following characteristics: $Z_O$ = 50 Ω, 50% duty cycle, $t_r \le 10$ ns, $t_f \le 10$ ns.

**Figure 3. Receiver Propagation Delay Times**

PRODUCT PREVIEW

## PARAMETER MEASUREMENT INFORMATION (continued)

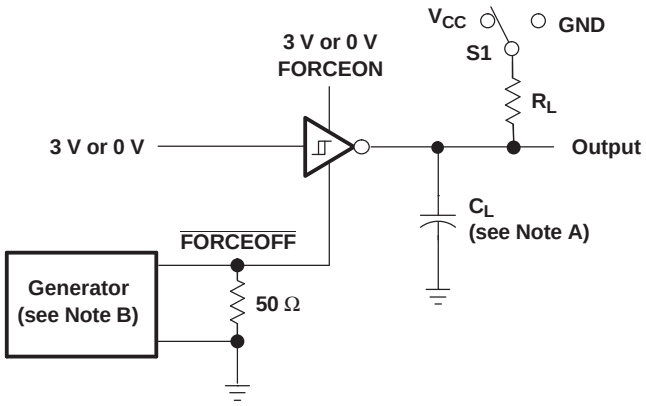


TEST CIRCUIT

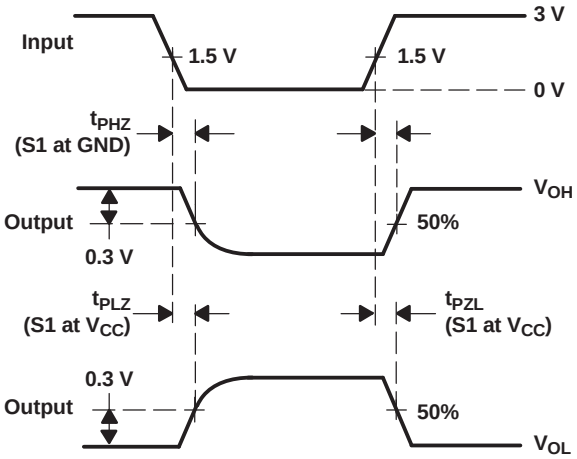


VOLTAGE WAVEFORMS

A. $C_L$ includes probe and jig capacitance.

B. The pulse generator has the following characteristics: $Z_O$ = 50 Ω, 50% duty cycle, $t_r \le 10$ ns, $t_f \le 10$ ns.

C. $t_{PLZ}$ and $t_{PHZ}$ are the same as $t_{dis}$.

D. $t_{PZL}$ and $t_{PZH}$ are the same as $t_{en}$.

**Figure 4. Receiver Enable and Disable Times**

PRODUCT PREVIEW

## PARAMETER MEASUREMENT INFORMATION (continued)

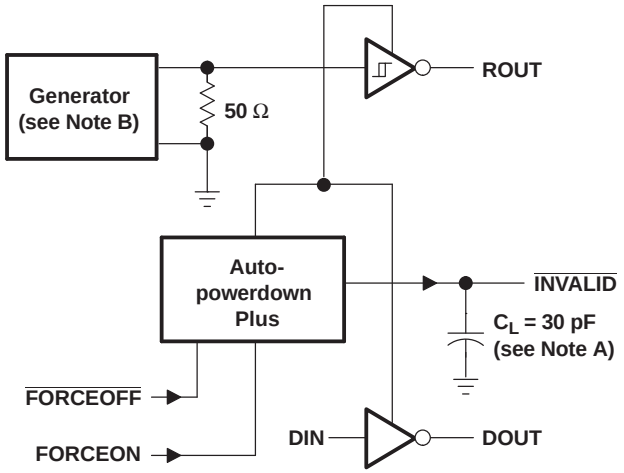


TEST CIRCUIT

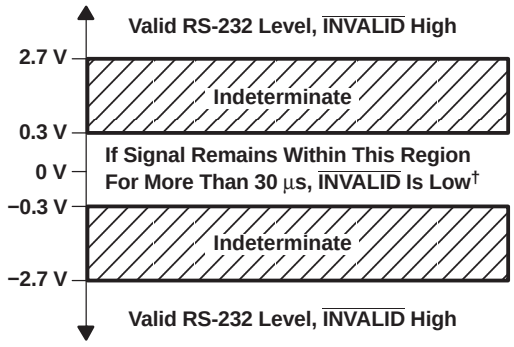


† Auto-powerdown plus disables drivers and reduces supply current to 1 µA.

NOTES: A. $C_L$ includes probe and jig capacitance.
B. The pulse generator has the following characteristics: PRR = 5 kbit/s, $Z_O$ = 50 Ω, 50% duty cycle, $t_r \le 10$ ns, $t_f \le 10$ ns.

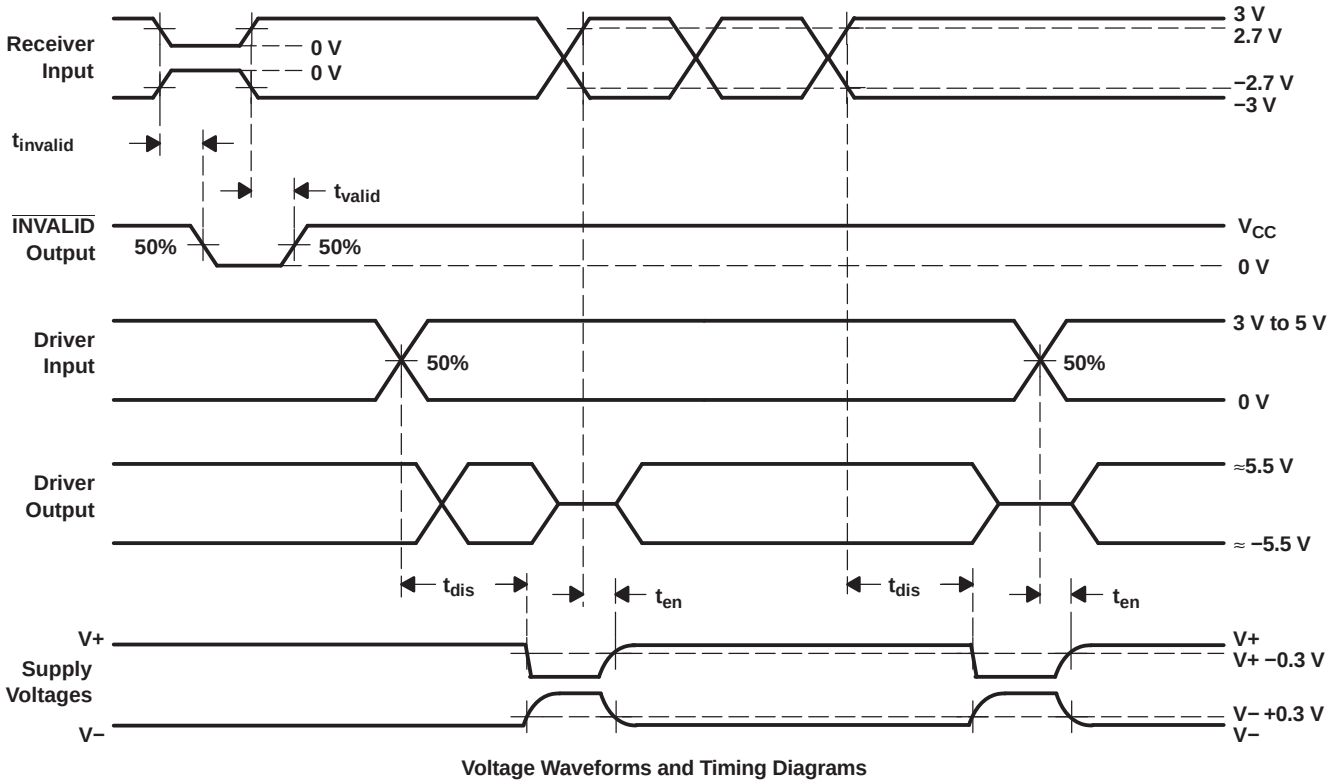


Voltage Waveforms and Timing Diagrams

**Figure 5. INVALID Propagation-Delay Times and Supply-Enabling Time**

PRODUCT PREVIEW

## APPLICATION INFORMATION

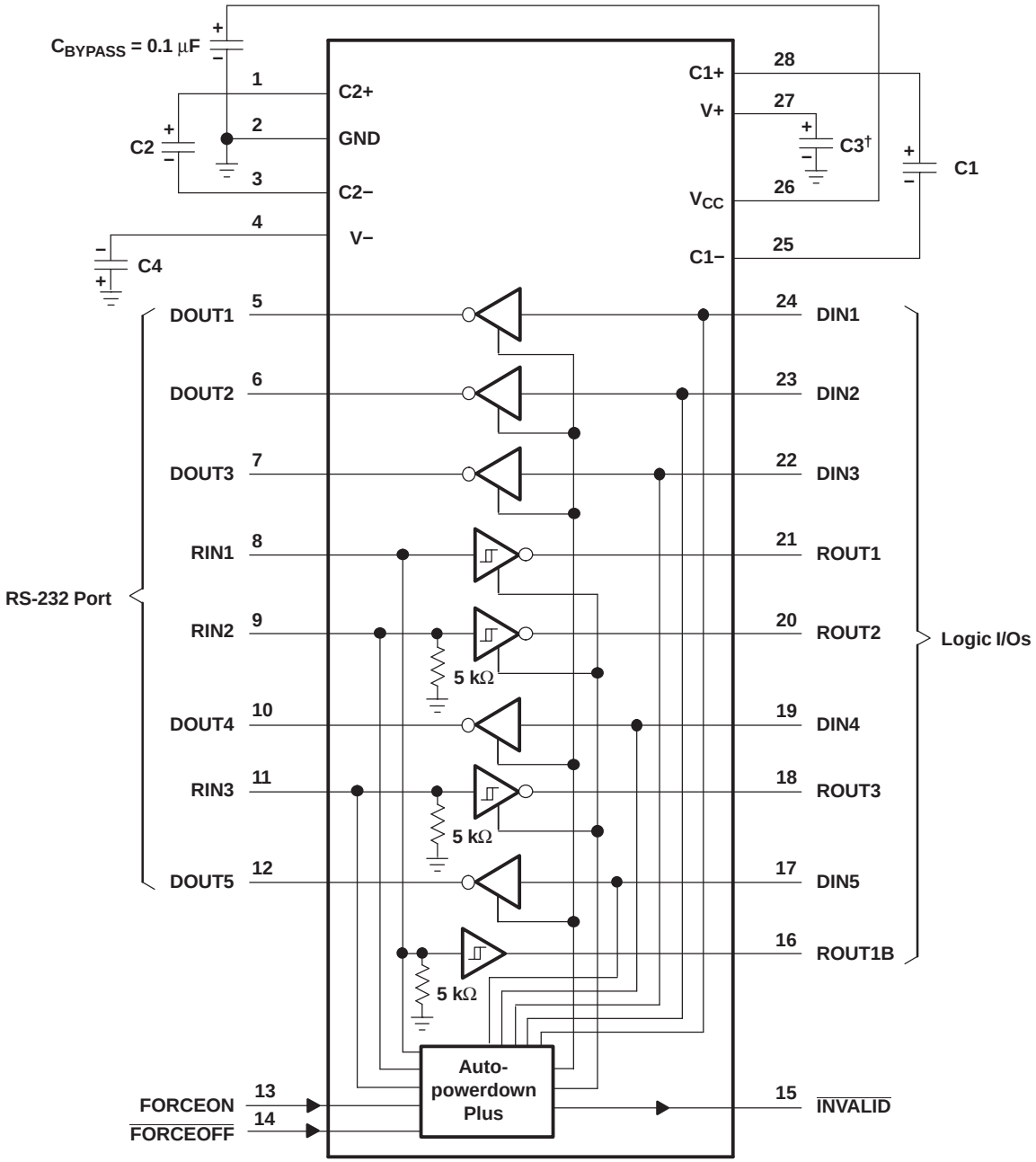


$V_{CC}$ vs CAPACITOR VALUES

| $V_{CC}$ | C1 | C2, C3, and C4 |
|---|---|---|
| 3.3 V ± 0.15 V | 0.1 µF | 0.1 µF |
| 3.3 V ± 0.3 V | 0.22 µF | 0.22 µF |
| 5 V ± 0.5 V | 0.047 µF | 0.33 µF |
| 3 V to 5.5 V | 0.22 µF | 1 µF |

† C3 can be connected to $V_{CC}$ or GND.

NOTES: A. Resistor values shown are nominal.
B. Nonpolarized ceramic capacitors are acceptable. If polarized tantalum or electrolytic capacitors are used, they should be connected as shown.

**Figure 6. Typical Operating Circuit and Capacitor Values**

## TAPE AND REEL INFORMATION

**REEL DIMENSIONS**

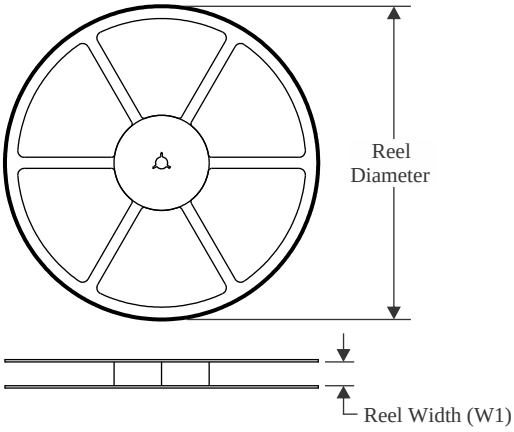


**TAPE DIMENSIONS**

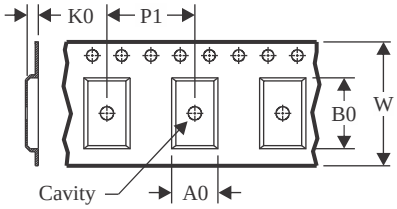


| | |
|---|---|
| A0 | Dimension designed to accommodate the component width |
| B0 | Dimension designed to accommodate the component length |
| K0 | Dimension designed to accommodate the component thickness |
| W | Overall width of the carrier tape |
| P1 | Pitch between successive cavity centers |

**QUADRANT ASSIGNMENTS FOR PIN 1 ORIENTATION IN TAPE**

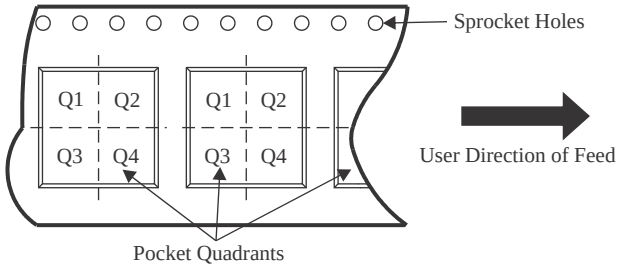


*All dimensions are nominal

| Device | Package Type | Package Drawing | Pins | SPQ | Reel Diameter (mm) | Reel Width W1 (mm) | A0 (mm) | B0 (mm) | K0 (mm) | P1 (mm) | W (mm) | Pin1 Quadrant |
|---|---|---|---|---|---|---|---|---|---|---|---|---|
| SN65C3238EDBR | SSOP | DB | 28 | 2000 | 330.0 | 16.4 | 8.45 | 10.55 | 2.5 | 12.0 | 16.2 | Q1 |
| SN65C3238EDWR | SOIC | DW | 28 | 1000 | 330.0 | 32.4 | 11.35 | 18.67 | 3.1 | 16.0 | 32.0 | Q1 |
| SN75C3238EDWR | SOIC | DW | 28 | 1000 | 330.0 | 32.4 | 11.35 | 18.67 | 3.1 | 16.0 | 32.0 | Q1 |

TAPE AND REEL BOX DIMENSIONS

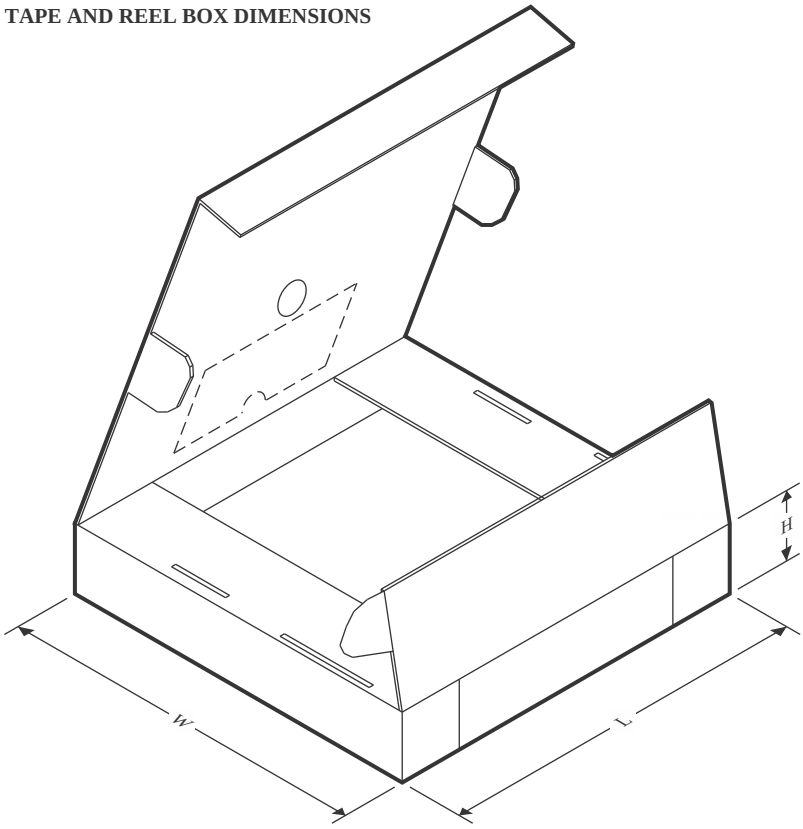


*All dimensions are nominal

| Device | Package Type | Package Drawing | Pins | SPQ | Length (mm) | Width (mm) | Height (mm) |
|---|---|---|---|---|---|---|---|
| SN65C3238EDBR | SSOP | DB | 28 | 2000 | 353.0 | 353.0 | 32.0 |
| SN65C3238EDWR | SOIC | DW | 28 | 1000 | 350.0 | 350.0 | 66.0 |
| SN75C3238EDWR | SOIC | DW | 28 | 1000 | 350.0 | 350.0 | 66.0 |

DW (R–PDSO–G28) PLASTIC SMALL OUTLINE

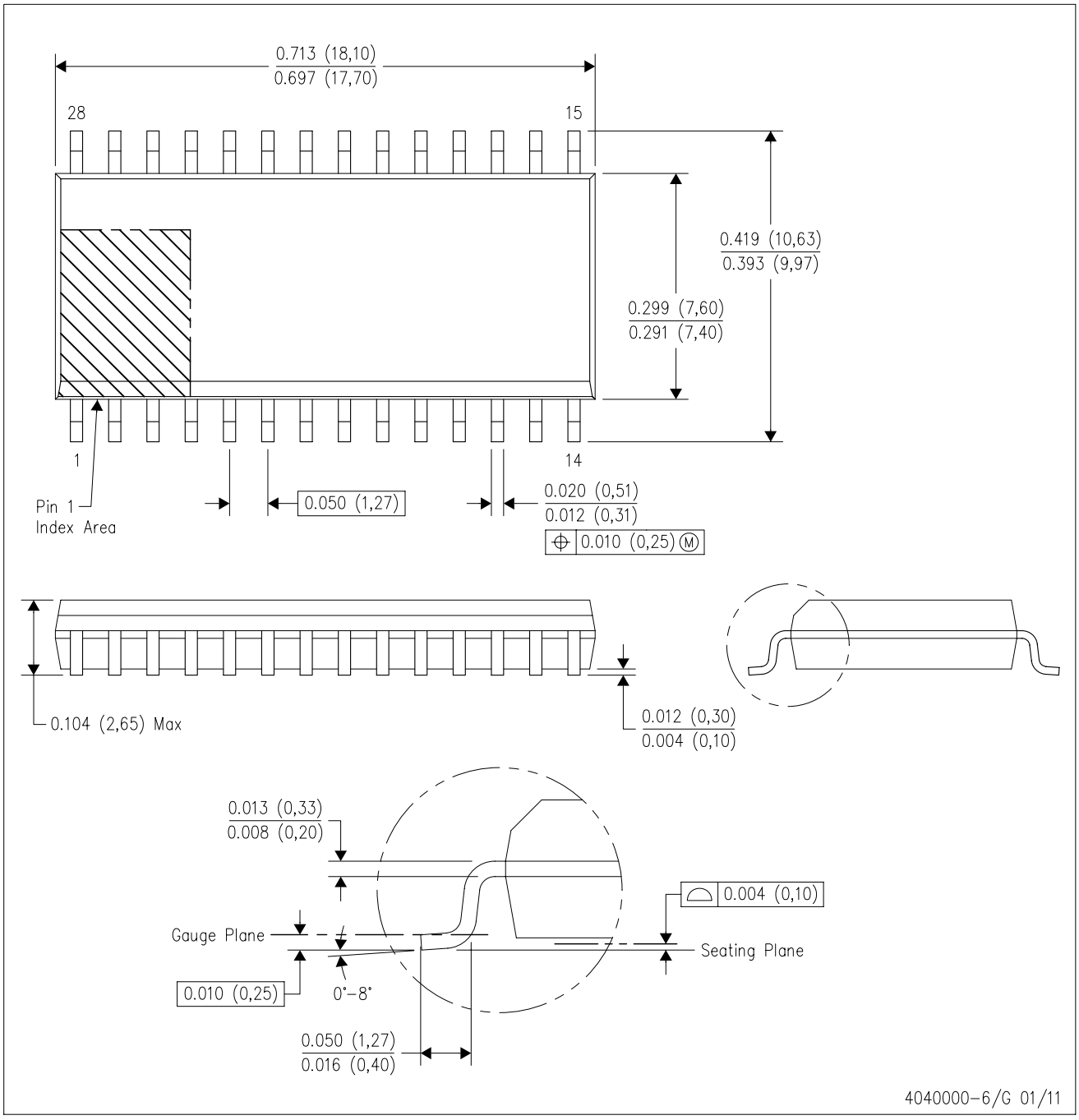


NOTES:
A. All linear dimensions are in inches (millimeters). Dimensioning and tolerancing per ASME Y14.5M–1994.
B. This drawing is subject to change without notice.
C. Body dimensions do not include mold flash or protrusion not to exceed 0.006 (0,15).
D. Falls within JEDEC MS–013 variation AE.

DW (R–PDSO–G28) PLASTIC SMALL OUTLINE

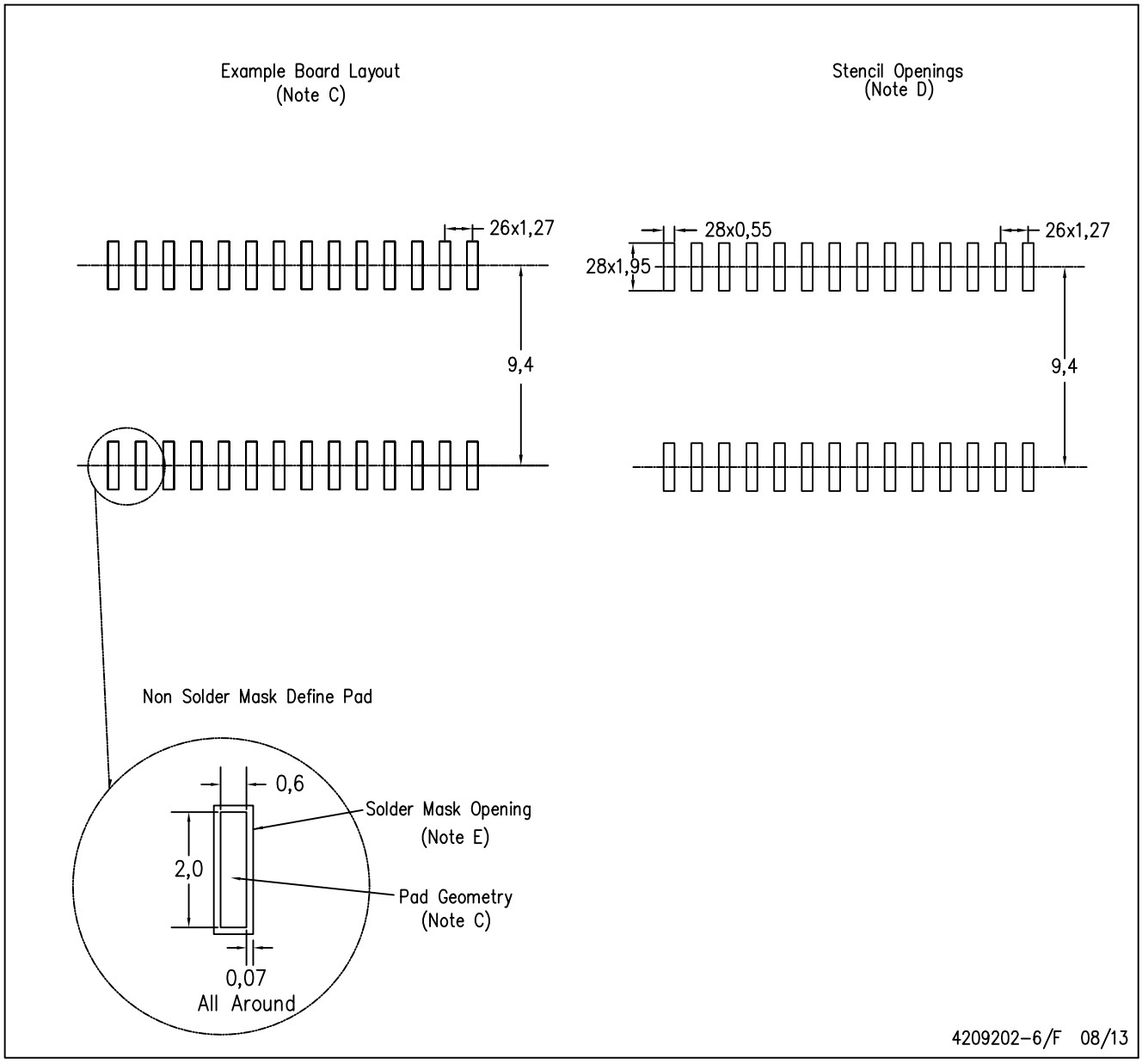


NOTES:
A. All linear dimensions are in millimeters.
B. This drawing is subject to change without notice.
C. Refer to IPC7351 for alternate board design.
D. Laser cutting apertures with trapezoidal walls and also rounding corners will offer better paste release. Customers should contact their board assembly site for stencil design recommendations. Refer to IPC–7525
E. Customers should contact their board fabrication site for solder mask tolerances between and around signal pads.

# PACKAGE OUTLINE

## DB0028A

## SSOP - 2 mm max height

SMALL OUTLINE PACKAGE

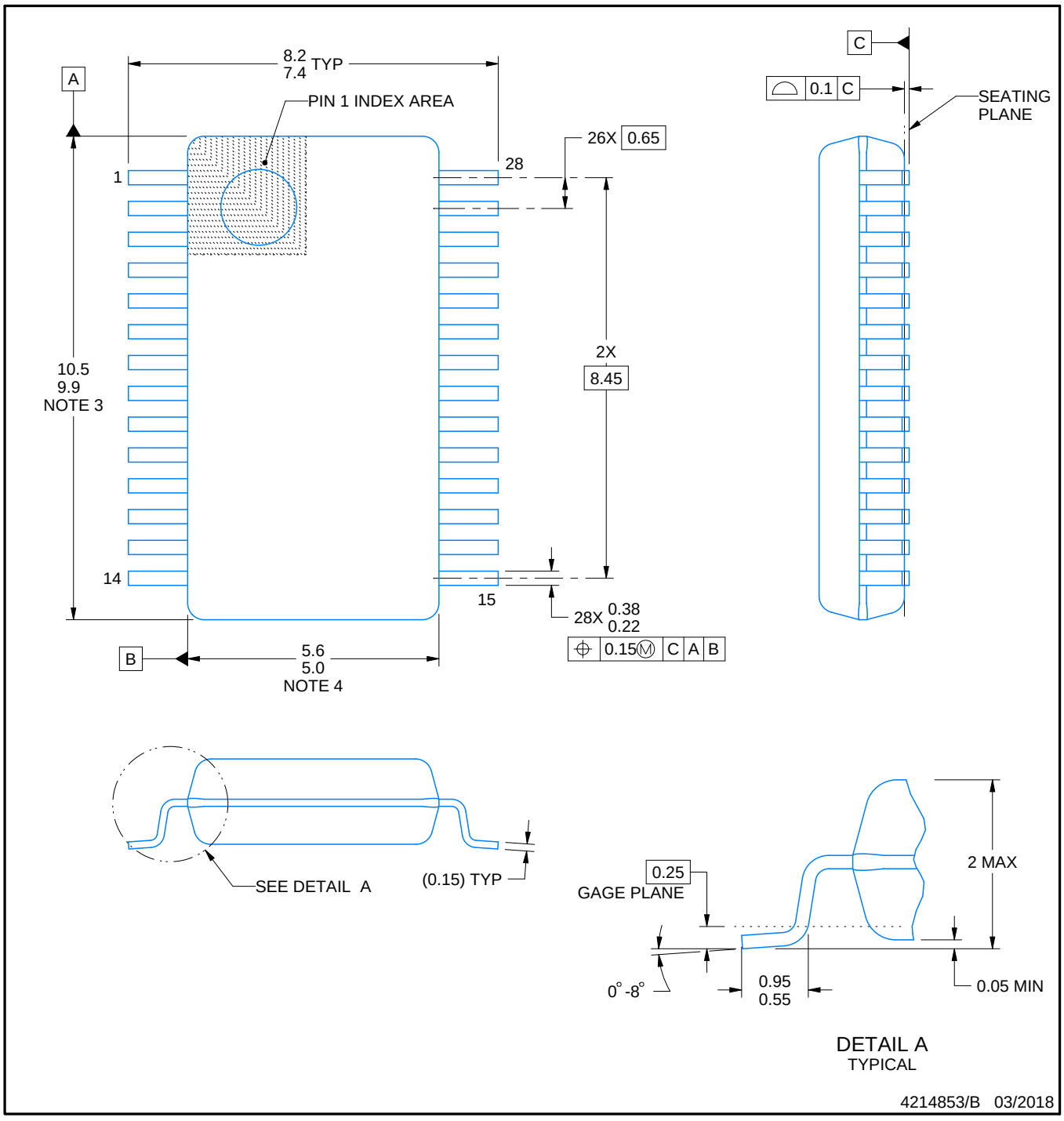


NOTES:

1. All linear dimensions are in millimeters. Any dimensions in parenthesis are for reference only. Dimensioning and tolerancing per ASME Y14.5M.
2. This drawing is subject to change without notice.
3. This dimension does not include mold flash, protrusions, or gate burrs. Mold flash, protrusions, or gate burrs shall not exceed 0.15 mm per side.
4. This dimension does not include interlead flash. Interlead flash shall not exceed 0.25 mm per side.
5. Reference JEDEC registration MO-150.

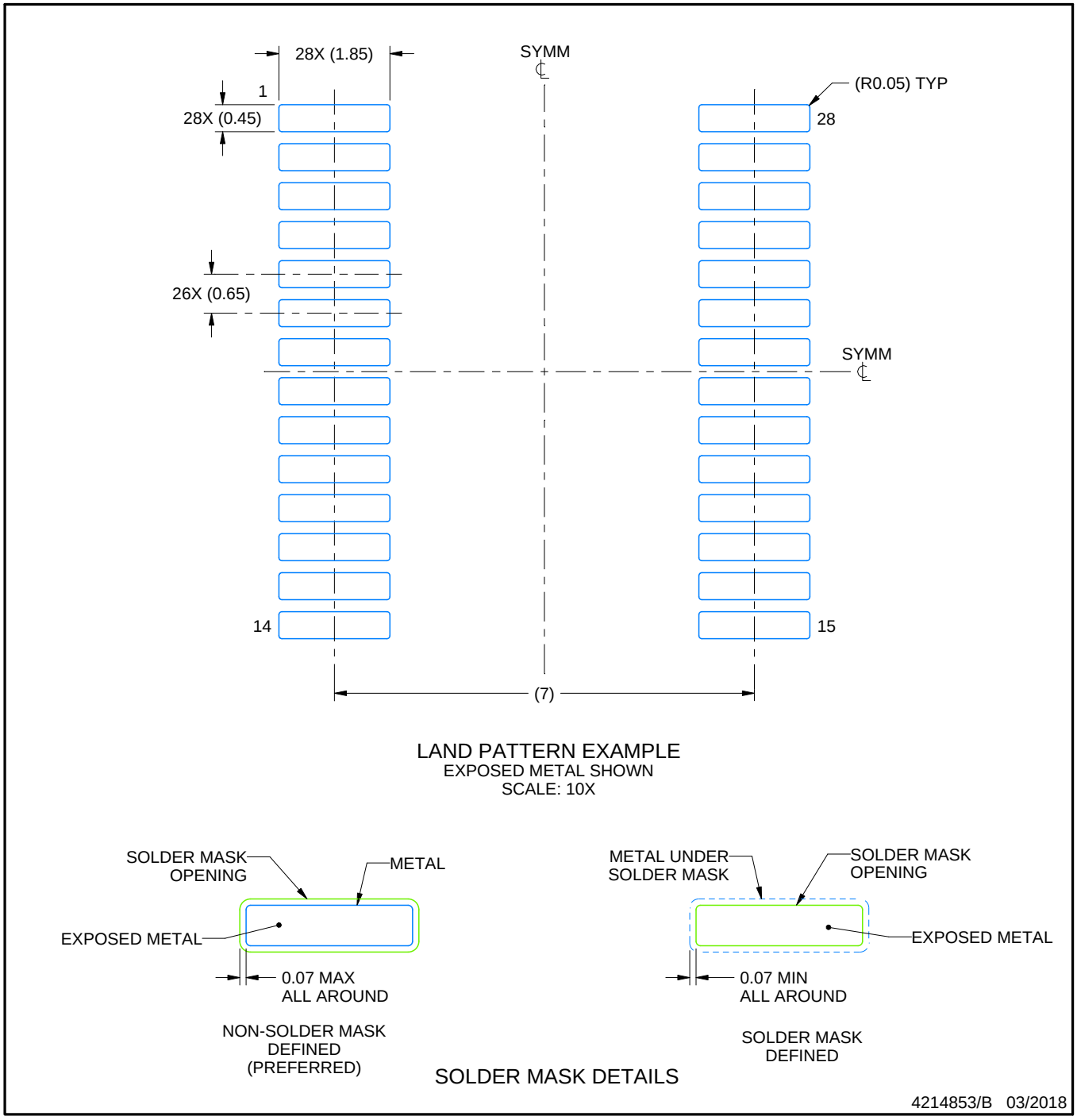


NOTES: (continued)

6. Publication IPC-7351 may have alternate designs.
7. Solder mask tolerances between and around signal pads can vary based on board fabrication site.

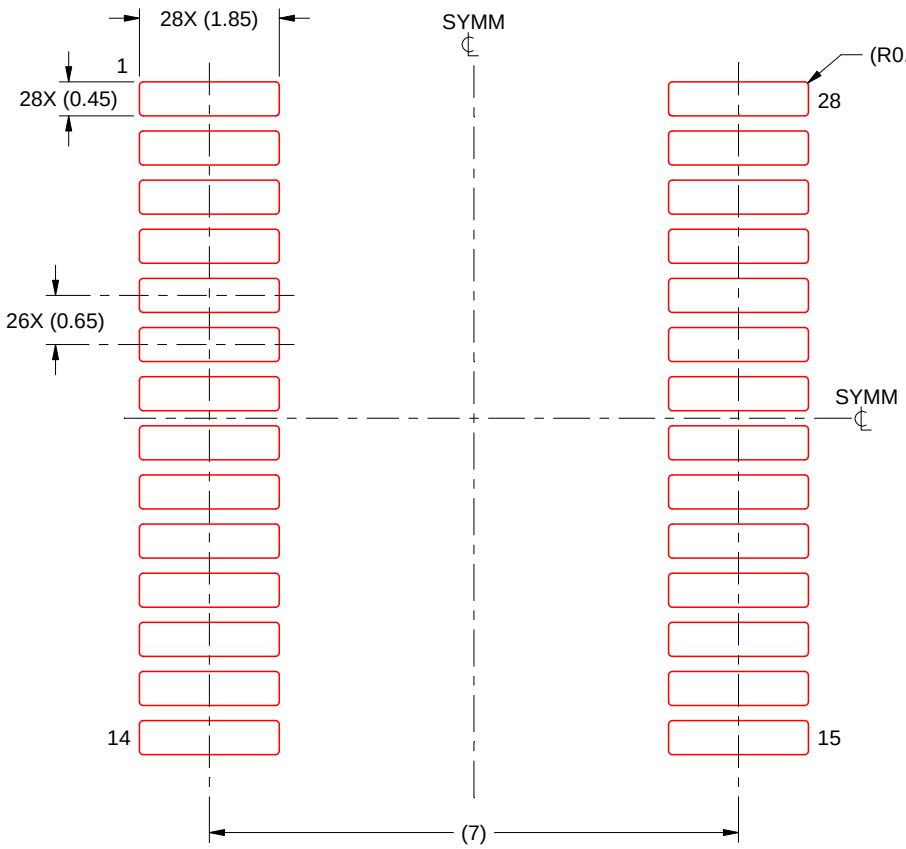


SOLDER PASTE EXAMPLE
BASED ON 0.125 mm THICK STENCIL
SCALE: 10X

4214853/B 03/2018

NOTES: (continued)

8. Laser cutting apertures with trapezoidal walls and rounded corners may offer better paste release. IPC-7525 may have alternate design recommendations.
9. Board assembly site may have different recommendations for stencil design.

# IMPORTANT NOTICE AND DISCLAIMER

TI PROVIDES TECHNICAL AND RELIABILITY DATA (INCLUDING DATA SHEETS), DESIGN RESOURCES (INCLUDING REFERENCE DESIGNS), APPLICATION OR OTHER DESIGN ADVICE, WEB TOOLS, SAFETY INFORMATION, AND OTHER RESOURCES “AS IS” AND WITH ALL FAULTS, AND DISCLAIMS ALL WARRANTIES, EXPRESS AND IMPLIED, INCLUDING WITHOUT LIMITATION ANY IMPLIED WARRANTIES OF MERCHANTABILITY, FITNESS FOR A PARTICULAR PURPOSE OR NON-INFRINGEMENT OF THIRD PARTY INTELLECTUAL PROPERTY RIGHTS.

These resources are intended for skilled developers designing with TI products. You are solely responsible for (1) selecting the appropriate TI products for your application, (2) designing, validating and testing your application, and (3) ensuring your application meets applicable standards, and any other safety, security, regulatory or other requirements.

These resources are subject to change without notice. TI grants you permission to use these resources only for development of an application that uses the TI products described in the resource. Other reproduction and display of these resources is prohibited. No license is granted to any other TI intellectual property right or to any third party intellectual property right. TI disclaims responsibility for, and you will fully indemnify TI and its representatives against, any claims, damages, costs, losses, and liabilities arising out of your use of these resources.

TI’s products are provided subject to TI’s Terms of Sale or other applicable terms available either on ti.com or provided in conjunction with such TI products. TI’s provision of these resources does not expand or otherwise alter TI’s applicable warranties or warranty disclaimers for TI products.

TI objects to and rejects any additional or different terms you may have proposed.

Mailing Address: Texas Instruments, Post Office Box 655303, Dallas, Texas 75265
Copyright © 2025, Texas Instruments Incorporated