

2x2 LVPECL CROSSPOINT SWITCH

FEATURES

- **High Speed 2x2 LVPECL Crosspoint Switch**
- **LVDS Crosspoint Switch Available in SN65LVCP22**
- **50 ps (Typ), of Peak-to-Peak Jitter With PRBS = 2^{23}– 1 Pattern**
- **Output (Channel-to-Channel) Skew Is 10 ps (Typ), 50 ps (Max)**
- **Configurable as 2:1 Mux, 1:2 Demux, Repeater or 1:2 Signal Splitter**
- **Inputs Accept LVDS, LVPECL, and CML Signals**
- **Fast Switch Time of 1.7 ns (Typ)**
- **Fast Propagation Delay of 0.75 ns (Typ)**
- **16 Lead SOIC and TSSOP Packages**
- **Operating Temperature: –40°C to 85°C**

APPLICATIONS

- **Gigabit Ethernet Redundant Transmission Paths**
- **Gigabit Interface Converters (GBICs)**
- **Fibre Channel Redundant Transmission Paths**
- **HDTV Video Routing**
- **Base Stations**
- **Protection Switching for Serial Backplanes**
- **Network Switches/Routers**
- **Optical Networking Line Cards/Switches**
- **Clock Distribution**

DESCRIPTION

The SN65LVCP23 is a 2x2 LVPECL crosspoint switch. The dual channels incorporate wide common-mode (0 V to 4 V) receivers, allowing for the receipt of LVDS, LVPECL, and CML signals. The dual outputs are LVPECL drivers to provide high-speed operation. The SN65LVCP23 provides a single device supporting 2:2 buffering (repeating), 1:2 splitting, 2:1 multiplexing, 2x2 switching, and LVDS/CML to LVPECL level translation on each channel. The flexible operation of the SN65LVCP23 provides a single device to support the redundant serial bus transmission needs (working and protection switching cards) of fault-tolerant switch systems found in optical networking, wireless infrastructure, and data communications systems. TI offers an additional gigabit repeater/translator in the SN65LVDS101.

The SN65LVCP23 uses a fully differential data path to ensure low-noise generation, fast switching times, low pulse width distortion, and low jitter. Output channel-to-channel skew is less than 10 ps (typ) and 50 ps (max) to ensure accurate alignment of outputs in all applications. Both SOIC and TSSOP package options are available.

OUTPUTS OPERATING SIMULTANEOUSLY

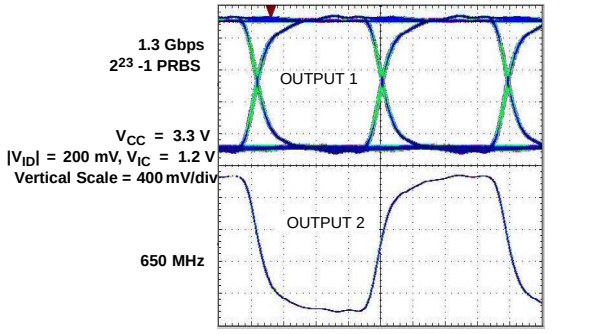

Please be aware that an important notice concerning availability, standard warranty, and use in critical applications of Texas Instruments semiconductor products and disclaimers thereto appears at the end of this data sheet.

PRODUCTION DATA information is current as of publication date. Products conform to specifications per the terms of the Texas Instruments standard warranty. Production processing does not necessarily include testing of all parameters.

Copyright © 2002–2006, Texas Instruments Incorporated

These devices have limited built-in ESD protection. The leads should be shorted together or the device placed in conductive foam during storage or handling to prevent electrostatic damage to the MOS gates.

ORDERING INFORMATION

PACKAGE DESIGNATOR	PART NUMBER(1)	SYMBOLIZATION
SOIC	SN65LVCP23D	LVCP23
TSSOP	SN65LVCP23PW	LVCP23

(1) Add the suffix R for taped and reeled carrier

PACKAGE DISSIPATION RATINGS

PACKAGE	CIRCUIT BOARD MODEL	$T_A \leq 25°C$ POWER RATING	DERATING FACTOR(1) ABOVE $T_A = 25°C$	$T_A = 85°C$ POWER RATING
SOIC (D)	High-K(2)	1361 mW	13.9 mW/°C	544 mW
TSSOP (PW)	High-K(2)	1074 mW	10.7 mW/°C	430 mW

(1) This is the inverse of the junction-to-ambient thermal resistance when board-mounted and with no air flow.
(2) In accordance with the High-K thermal metric definitions of EIA/JESD51-7.

THERMAL CHARACTERISTICS

PARAMETER			TEST CONDITIONS	VALUE	UNITS
θ_{JB}	Junction-to-board thermal resistance	D		15.7	°C/W
		PW		22.1	°C/W
θ_{JC}	Junction-to-case thermal resistance	D		26.1	°C/W
		PW		17.3	°C/W
P_D	Device power dissipation	Typical	V_{CC} = 3.3 V, T_A = 25°C, 2 Gbps	165	mW
		Maximum	V_{CC} = 3.6 V, T_A = 85°C, 2 Gbps	234	mW

FUNCTIONAL BLOCK DIAGRAM

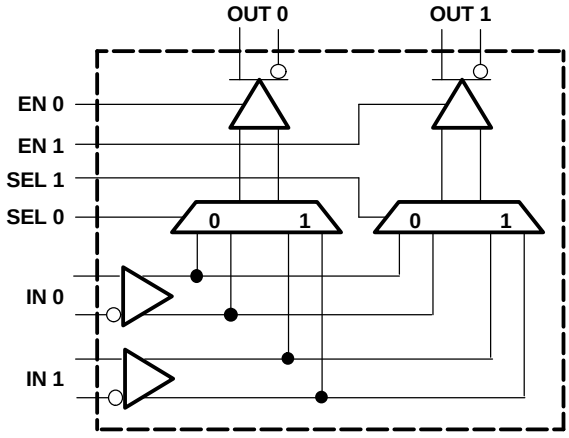

CIRCUIT FUNCTION TABLE

INPUTS(1)						OUTPUTS(1)		LOGIC DIAGRAM
IN 0	IN 1	SEL 0	SEL1	EN 0	EN 1	OUT 0	OUT 1	
X	X	X	X	L	L	L	L	
>100 mV	X	L	L	H	L	H	L	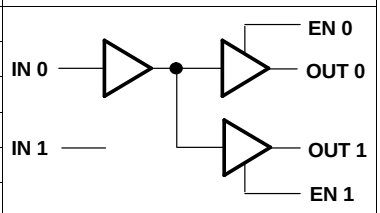
<-100 mV	X	L	L	H	L	L	L	
<-100 mV	X	L	L	H	H	L	L	
>100 mV	X	L	L	H	H	H	H	
>100 mV	X	L	L	L	H	L	H	
<-100 mV	X	L	L	L	H	L	L	
>100 mV	X	L	H	H	L	H	L	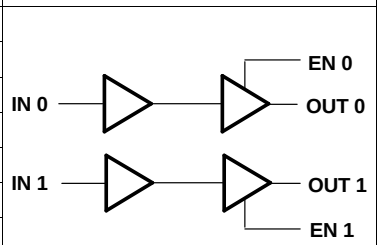
<-100 mV	X	L	H	H	L	L	L	
<-100 mV	<-100 mV	L	H	H	H	L	L	
<-100 mV	>100 mV	L	H	H	H	L	H	
>100 mV	<-100 mV	L	H	H	H	H	L	
>100 mV	>100 mV	L	H	H	H	H	H	
X	>100 mV	L	H	L	H	L	H	
X	<-100 mV	L	H	L	H	L	L	
X	>100 mV	H	H	H	L	H	L	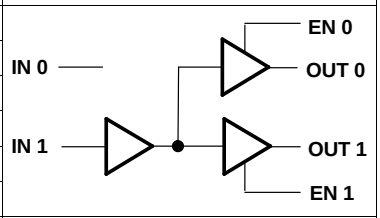
X	<-100 mV	H	H	H	L	L	L	
X	<-100 mV	H	H	H	H	L	L	
X	>100 mV	H	H	H	H	H	H	
X	>100 mV	H	H	L	H	L	H	
X	<-100 mV	H	H	L	H	L	L	
X	>100 mV	H	L	H	L	H	L	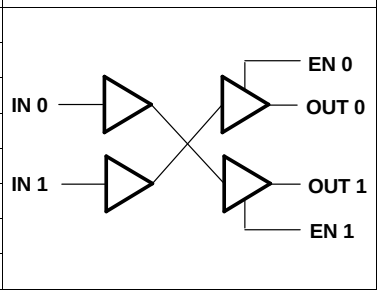
X	<-100 mV	H	L	H	L	L	L	
<-100 mV	<-100 mV	H	L	H	H	L	L	
<-100 mV	>100 mV	H	L	H	H	H	L	
>100 mV	<-100 mV	H	L	H	H	L	H	
>100 mV	>100 mV	H	L	H	H	H	H	
>100 mV	X	H	L	L	H	L	H	
<-100 mV	X	H	L	L	H	L	L	

(1) H = High level, L = Low level, Z = High impedance, X = Don't care

EQUIVALENT INPUT AND OUTPUT SCHEMATIC DIAGRAMS

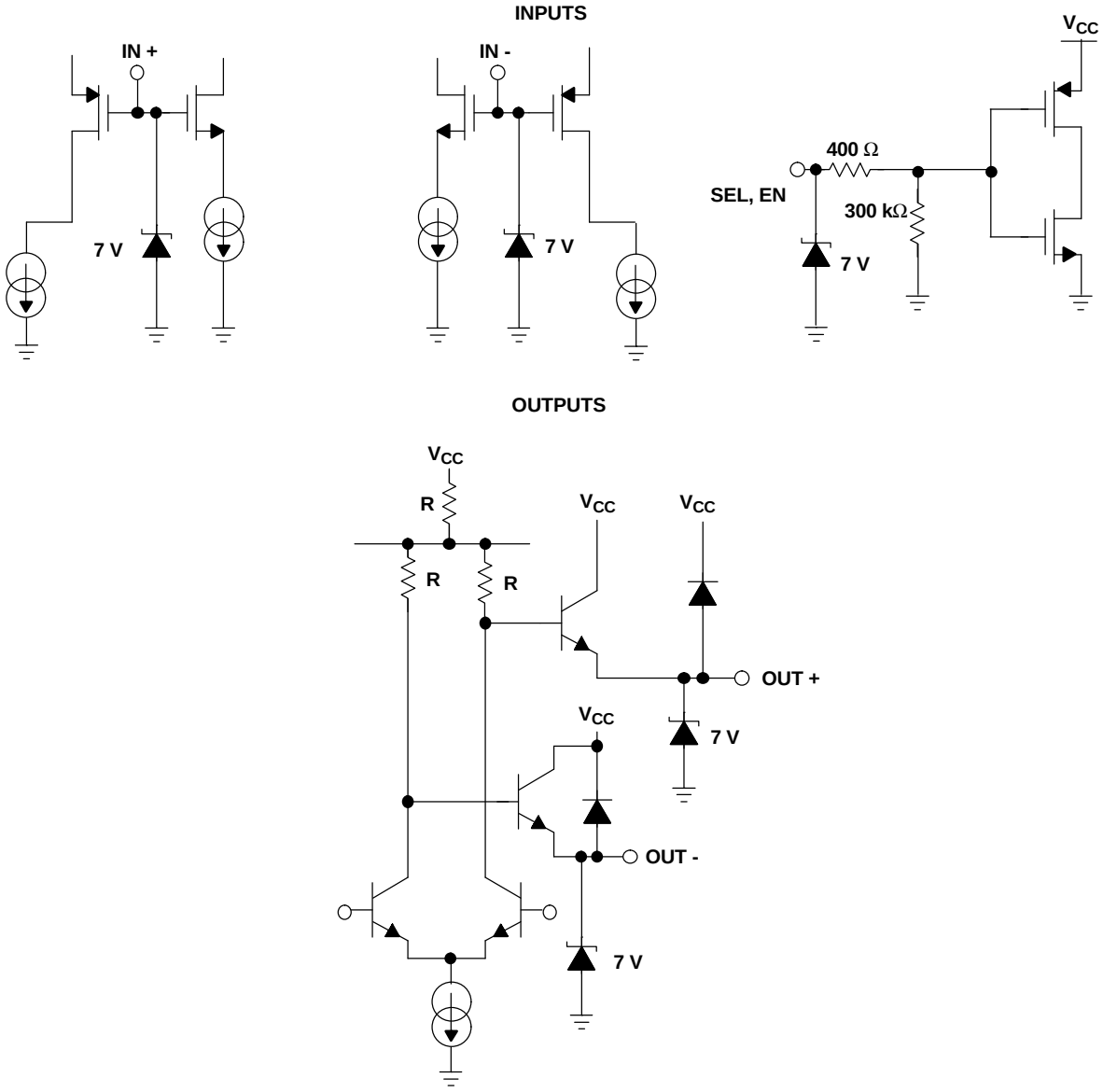

ABSOLUTE MAXIMUM RATINGS

over operating free-air temperature range unless otherwise noted(1)

			UNITS
Supply voltage range,(2) V_{CC}			–0.5 V to 4 V
CMOS/TTL input voltage (ENO, EN1, SEL0, SEL1)			–0.5 V to 4 V
Receiver input voltage (IN+, IN–)			–0.7 V to 4.3 V
LVPECL driver output voltage (OUT+, OUT–)			–0.5 V to 4 V
Output current	Continuous		50 mA
	Surge		100 mA
Storage temperature range			–65°C to 125°C
Lead temperature 1,6 mm (1/16 inch) from case for 10 seconds			235°C
Continuous power dissipation			See Dissipation Rating Table
Electrostatic discharge	Human body model(3)	All pins	±5 kV
	Charged-device mode(4)	All pins	±500 V

(1) Stresses beyond those listed under "absolute maximum ratings" may cause permanent damage to the device. These are stress ratings only, and functional operation of the device at these or any other conditions beyond those indicated under "recommended operating conditions" is not implied. Exposure to absolute-maximum-rated conditions for extended periods may affect device reliability.
(2) All voltage values, except differential I/O bus voltages, are with respect to network ground terminals.
(3) Tested in accordance with JEDEC Standard 22, Test Method A114-A.
(4) Tested in accordance with JEDEC Standard 22, Test Method C101.

RECOMMENDED OPERATING CONDITIONS

		MIN	NOM	MAX	UNIT
V_{CC}	Supply voltage	3	3.3	3.6	V
	Receiver input voltage	0		4	V
	Junction temperature			125	°C
T_A	Operating free-air temperature(1)	–40		85	°C
$\|V_{ID}\|$	Magnitude of differential input voltage	0.1		3	V

(1) Maximum free-air temperature operation is allowed as long as the device maximum junction temperature is not exceeded.

INPUT ELECTRICAL CHARACTERISTICS

over recommended operating conditions unless otherwise noted

PARAMETER		TEST CONDITIONS	MIN	TYP(1)	MAX	UNIT
CMOS/TTL DC SPECIFICATIONS (EN0, EN1, SEL0, SEL1)						
V_{IH}	High-level input voltage		2		V_{CC}	V
V_{IL}	Low-level input voltage		GND		0.8	V
I_{IH}	High-level input current	V_{IN} = 3.6 V or 2.0 V, V_{CC} = 3.6 V		±3	±20	µA
I_{IL}	Low-level input current	V_{IN} = 0.0 V or 0.8 V, V_{CC} = 3.6 V		±1	±10	µA
V_{CL}	Input clamp voltage	I_{CL} = –18 mA		–0.8	–1.5	V
LVPECL OUTPUT SPECIFICATIONS (OUT0, OUT1)						
V_{OH}	Output high voltage	R_L = 50 Ω to V_{TT} , V_{TT} = V_{CC} – 2.0 V, See Figure 2	V_{CC} – 1.3		V_{CC} – 0.85	V
V_{OL}	Output low voltage		V_{CC} – 2.2		V_{CC} – 1.65	
$\lvert V_{OD} \rvert$	Differential output voltage		600	800	1000	mV
C_O	Differential output capacitance	V_I = 0.4 sin(4E6πt) + 0.5 V		3		pF
RECEIVER DC SPECIFICATIONS (IN0, IN1)						
V_{TH}	Positive-going differential input voltage threshold	See Figure 1 and Table 1			100	mV
V_{TL}	Negative-going differential input voltage threshold	See Figure 1 and Table 1	–100			mV
$V_{ID(HYS)}$	Differential input voltage hysteresis			25		mV
V_{CMR}	Common-mode voltage range	V_{ID} = 100 mV, V_{CC} = 3.0 V to 3.6 V	0.05		3.95	V
I_{IN}	Input current	V_{IN} = 4 V, V_{CC} = 3.6 V or 0.0 V		±1	±10	µA
		V_{IN} = 0 V, V_{CC} = 3.6 V or 0.0 V		±1	±10	
C_{IN}	Differential input capacitance	V_I = 0.4 sin (4E6πt) + 0.5 V		1		pF
SUPPLY CURRENT						
I_{CCD}	DC supply current	No load		50	65	mA

(1) All typical values are at 25°C and with a 3.3-V supply.

SWITCHING CHARACTERISTICS

over recommended operating conditions unless otherwise noted

PARAMETER		TEST CONDITIONS	MIN	TYP	MAX	UNIT
t_{SET}	Input to SEL setup time	Figure 5	1	0.5		ns
t_{HOLD}	Input to SEL hold time	Figure 5	1.1	0.5		ns
t_{SWITCH}	SEL to switched output	Figure 5		1.7	2.5	ns
t_{PHKL}	Disable time, high-level-to-known LOW	Figure 4		2	2.5	ns
t_{PKLH}	Enable time, known LOW-to-high-level output	Figure 4		2	2.5	ns
t_{LHT}	Differential output signal rise time (20% – 80%)(1)	Figure 3	80	110	220	ps
t_{HLT}	Differential output signal fall time (20% – 80%)(1)	Figure 3	80	110	220	ps
t_{JIT}	Added peak-to-peak jitter	V_{ID} = 200 mV, 50% duty cycle, V_{CM} = 1.2 V, 650 MHz		15	30	ps
		V_{ID} = 200 mV, PRBS = 2^{23}–1 data pattern and K28.5 (0011111010), V_{CM} = 1.2 V at 1.3 Gbps		50	100	ps
t_{Jrms}	Added random jitter (rms)	V_{ID} = 200 mV, 50% duty cycle, V_{CM} = 1.2 V, 650 MHz		0.3	0.5	ps_{RMS}
t_{PLHD}	Propagation delay time, low-to-high-level output(1)	V_{CC} = 3.3 V, T_A = 25°C, See Figure 3	400	750	1100	ps
t_{PHLD}	Propagation delay time, high-to-low-level output(1)	V_{CC} = 3.3 V, T_A = 25°C, See Figure 3	400	750	1100	ps
t_{skew}	Pulse skew ($\lvert t_{PLHD} - t_{PHLD} \rvert$)(2)	Figure 3		20	100	ps
t_{CCS}	Output channel-to-channel skew, splitter mode	Figure 3		10	50	ps
f_{MAX}	Maximum operating frequency(3)		1			GHz

(1) Input: V_{IC} = 1.2 V, V_{ID} = 200 mV, 50% duty cycle, 1 MHz, t_r/t_f = 500 ps
(2) t_{skew} is the magnitude of the time difference between the t_{PLHD} and t_{PHLD} of any output of a single device.
(3) Signal generator conditions: 50% duty cycle, t_r or $t_f \le 100$ ps (10% to 90%), transmitter output criteria: duty cycle = 45% to 55% $V_{OD} \ge$ 300 mV.

PIN ASSIGNMENTS

D or PW PACKAGE
(TOP VIEW)

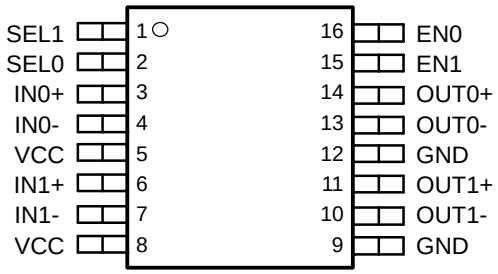

PARAMETER MEASUREMENT INFORMATION

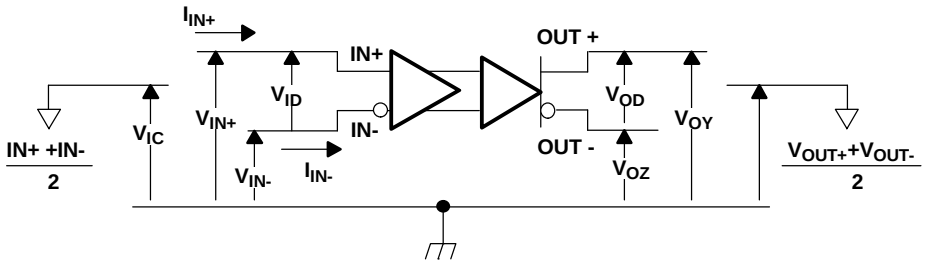

Figure 1. Voltage and Current Definitions

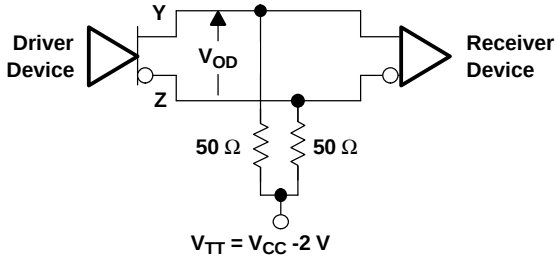

Figure 2. Typical Termination for LVPECL Output Driver

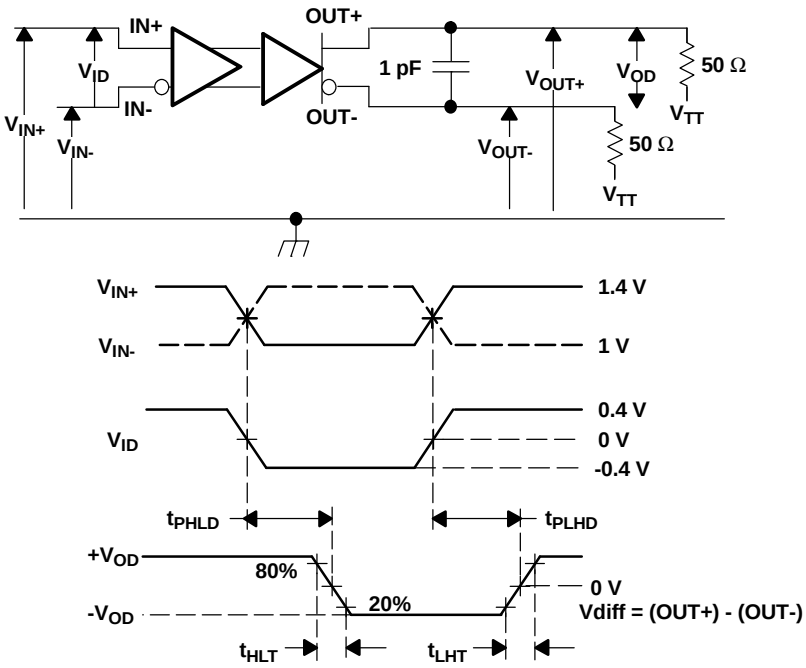

NOTE: All input pulses are supplied by a generator having the following characteristics: t_r or $t_f \le 0.25$ ns, pulse-repetition rate (PRR) = 0.5 Mpps, pulse width = 500 ±10 ns; C_L includes instrumentation and fixture capacitance within 0,06 mm of the D.U.T.

Figure 3. Timing Test Circuit and Waveforms

PARAMETER MEASUREMENT INFORMATION (continued)

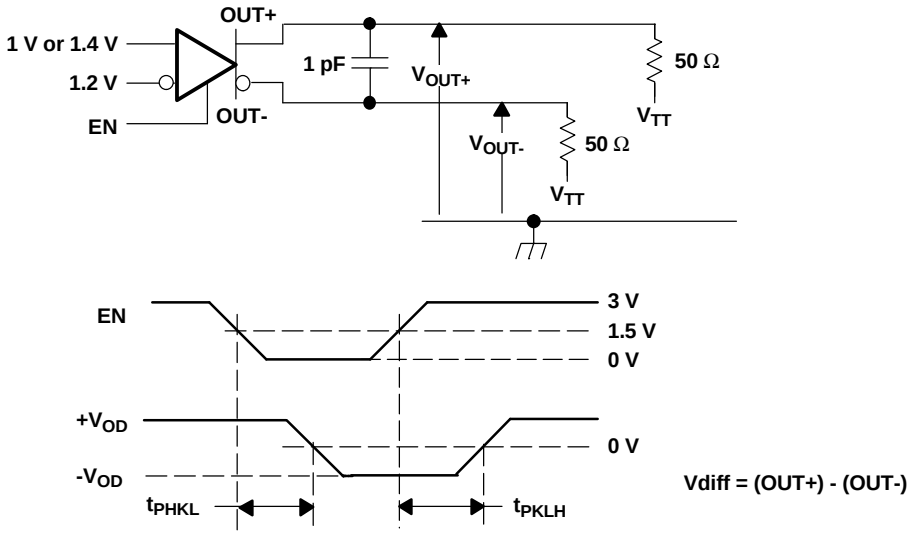

NOTE: All input pulses are supplied by a generator having the following characteristics: t_r or $t_f \leq 1$ ns, pulse-repetition rate (PRR) = 0.5 Mpps, pulse width = 500 ± 10 ns, C_L includes instrumentation and fixture capacitance within 0,06 mm of the D.U.T.

Figure 4. Enable and Disable Time Circuit and Definitions

Table 1. Receiver Input Voltage Threshold Test

APPLIED VOLTAGES		RESULTING DIFFERENTIAL INPUT VOLTAGE	RESULTING COMMON-MODE INPUT VOLTAGE	OUTPUT(1)
V_{IA}	V_{IB}	V_{ID}	V_{IC}	
1.25 V	1.15 V	100 mV	1.2 V	H
1.15 V	1.25 V	–100 mV	1.2 V	L
4.0 V	3.9 V	100 mV	3.95 V	H
3.9 V	4. 0 V	–100 mV	3.95 V	L
0.1 V	0.0 V	100 mV	0.05 V	H
0.0 V	0.1 V	–100 mV	0.05 V	L
1.7 V	0.7 V	1000 mV	1.2 V	H
0.7 V	1.7 V	–1000 mV	1.2 V	L
4.0 V	3.0 V	1000 mV	3.5 V	H
3.0 V	4.0 V	–1000 mV	3.5 V	L
1.0 V	0.0 V	1000 mV	0.5 V	H
0.0 V	1.0 V	–1000 mV	0.5 V	L

(1) H = high level, L = low level

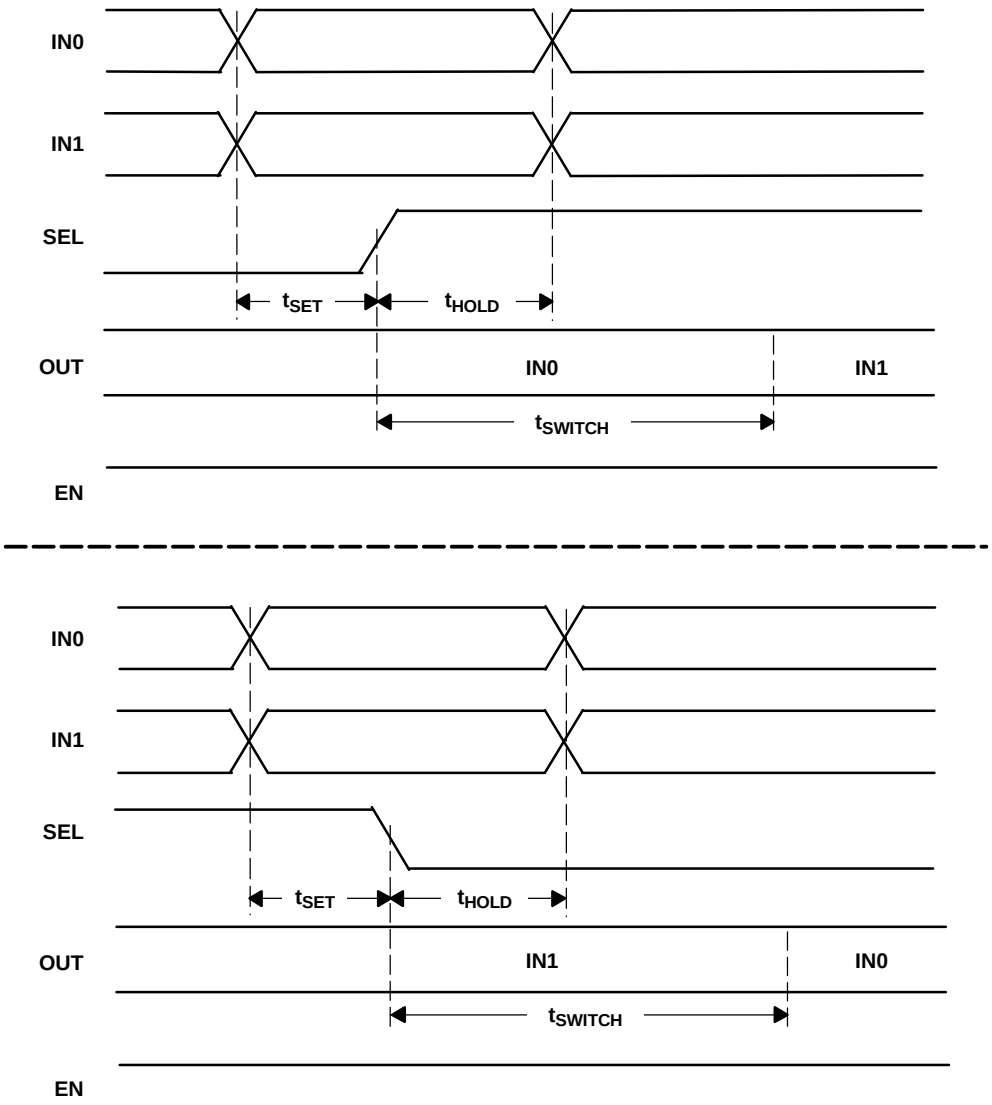

NOTE: t_{SET} and t_{HOLD} times specify that data must be in a stable state before and after mux control switches.

Figure 5. Input to Select for Both Rising and Falling Edge Setup and Hold Times

TYPICAL CHARACTERISTICS

SUPPLY CURRENT vs FREQUENCY

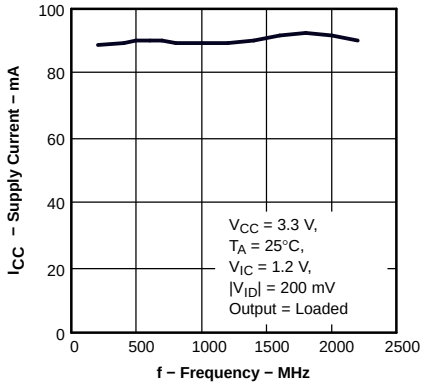

Figure 6.

PROPAGATION DELAY TIME vs FREE-AIR TEMPERATURE

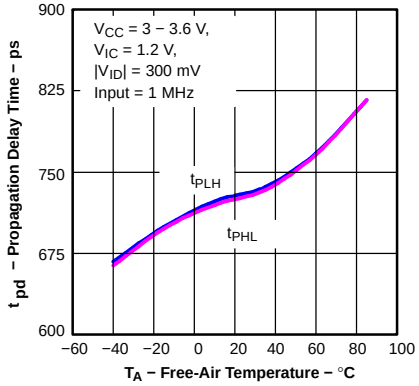

Figure 7.

PEAK-TO-PEAK JITTER vs FREQUENCY

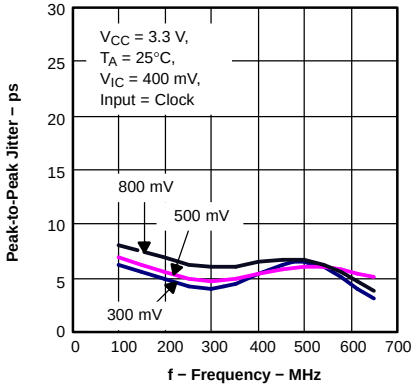

Figure 8.

PEAK-TO-PEAK JITTER vs DATA RATE

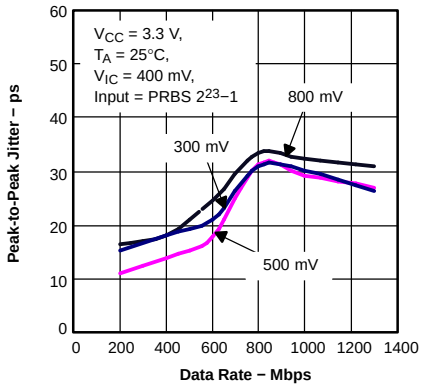

Figure 9.

PEAK-TO-PEAK JITTER vs FREQUENCY

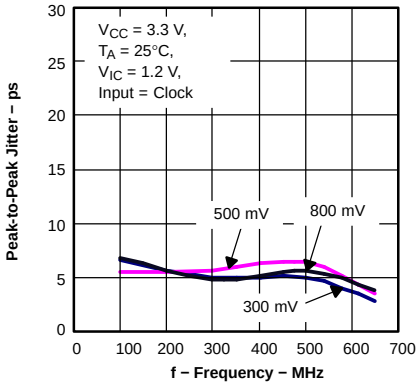

Figure 10.

PEAK-TO-PEAK JITTER vs DATA RATE

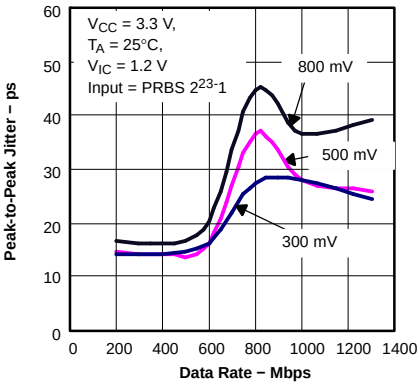

Figure 11.

PEAK-TO-PEAK JITTER vs FREQUENCY

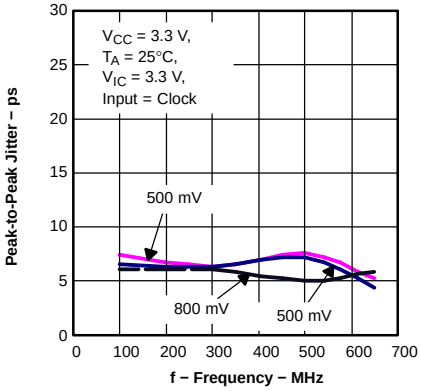

Figure 12.

PEAK-TO-PEAK JITTER vs DATA RATE

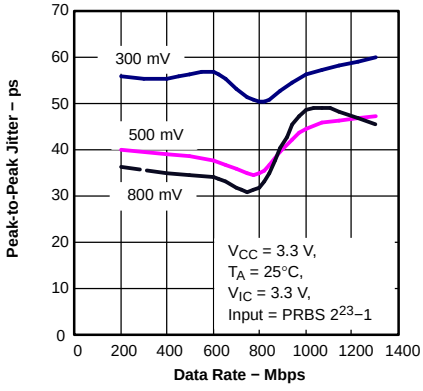

Figure 13.

TYPICAL CHARACTERISTICS (continued)

DIFFERENTIAL OUTPUT VOLTAGE vs FREQUENCY

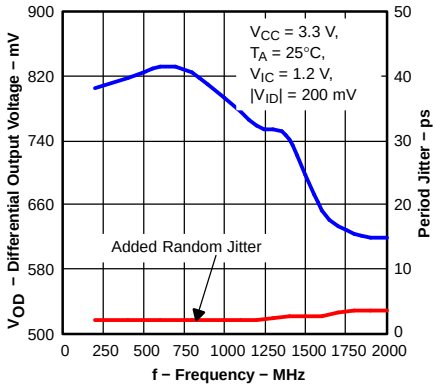

Figure 14.

PEAK-TO-PEAK JITTER vs DATA RATE

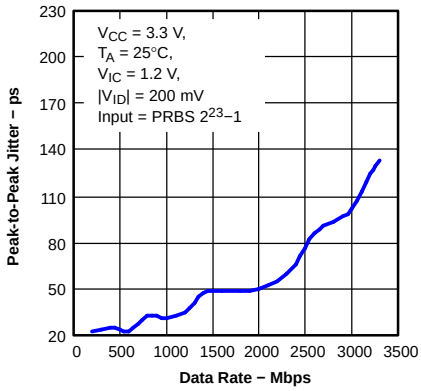

Figure 15.

APPLICATION INFORMATION

TYPICAL APPLICATION CIRCUITS (ECL, PECL, LVDS, etc.)

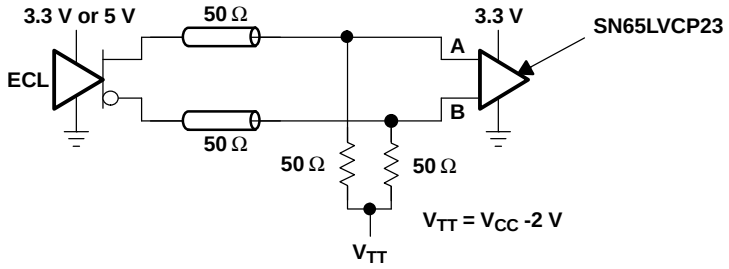

Figure 16. Low-Voltage Positive Emitter-Coupled Logic (LVPECL)

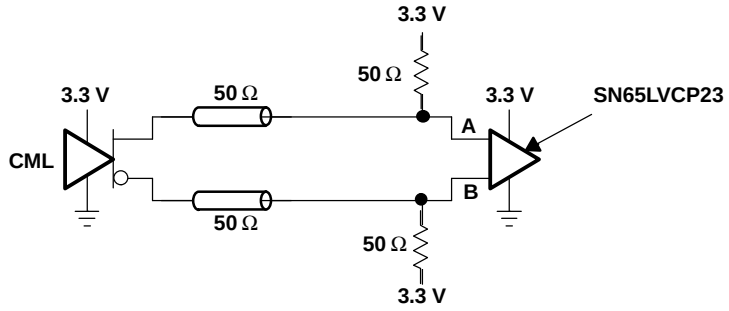

Figure 17. Current-Mode Logic (CML)

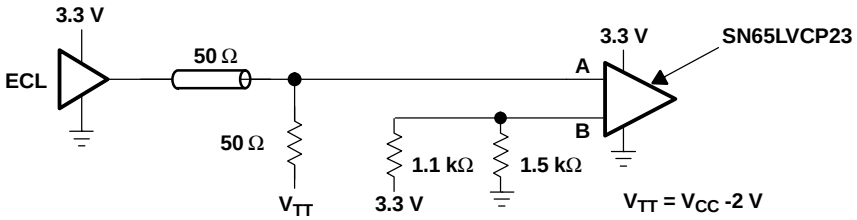

Figure 18. Single-Ended (LVPECL)

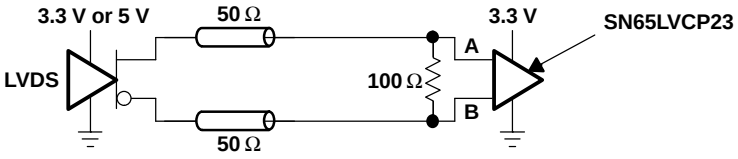

Figure 19. Low-Voltage Differential Signaling (LVDS)

PACKAGING INFORMATION

Orderable part number	Status (1)	Material type (2)	Package | Pins	Package qty | Carrier	RoHS (3)	Lead finish/ Ball material (4)	MSL rating/ Peak reflow (5)	Op temp (°C)	Part marking (6)
SN65LVCP23D	Active	Production	SOIC (D) | 16	40 | TUBE	Yes	NIPDAU	Level-1-260C-UNLIM	-40 to 85	LVCP23
SN65LVCP23D.B	Active	Production	SOIC (D) | 16	40 | TUBE	Yes	NIPDAU	Level-1-260C-UNLIM	-40 to 85	LVCP23
SN65LVCP23PW	Active	Production	TSSOP (PW) | 16	90 | TUBE	Yes	NIPDAU	Level-1-260C-UNLIM	-40 to 85	LVCP23
SN65LVCP23PW.B	Active	Production	TSSOP (PW) | 16	90 | TUBE	Yes	NIPDAU	Level-1-260C-UNLIM	-40 to 85	LVCP23
SN65LVCP23PWR	Active	Production	TSSOP (PW) | 16	2000 | LARGE T&R	Yes	NIPDAU	Level-1-260C-UNLIM	-40 to 85	LVCP23
SN65LVCP23PWR.B	Active	Production	TSSOP (PW) | 16	2000 | LARGE T&R	Yes	NIPDAU	Level-1-260C-UNLIM	-40 to 85	LVCP23
SN65LVCP23PWRG4	Active	Production	TSSOP (PW) | 16	2000 | LARGE T&R	Yes	NIPDAU	Level-1-260C-UNLIM	-40 to 85	LVCP23
SN65LVCP23PWRG4.B	Active	Production	TSSOP (PW) | 16	2000 | LARGE T&R	Yes	NIPDAU	Level-1-260C-UNLIM	-40 to 85	LVCP23

(1) **Status:** For more details on status, see our product life cycle.

(2) **Material type:** When designated, preproduction parts are prototypes/experimental devices, and are not yet approved or released for full production. Testing and final process, including without limitation quality assurance, reliability performance testing, and/or process qualification, may not yet be complete, and this item is subject to further changes or possible discontinuation. If available for ordering, purchases will be subject to an additional waiver at checkout, and are intended for early internal evaluation purposes only. These items are sold without warranties of any kind.

(3) **RoHS values:** Yes, No, RoHS Exempt. See the TI RoHS Statement for additional information and value definition.

(4) **Lead finish/Ball material:** Parts may have multiple material finish options. Finish options are separated by a vertical ruled line. Lead finish/Ball material values may wrap to two lines if the finish value exceeds the maximum column width.

(5) **MSL rating/Peak reflow:** The moisture sensitivity level ratings and peak solder (reflow) temperatures. In the event that a part has multiple moisture sensitivity ratings, only the lowest level per JEDEC standards is shown. Refer to the shipping label for the actual reflow temperature that will be used to mount the part to the printed circuit board.

(6) **Part marking:** There may be an additional marking, which relates to the logo, the lot trace code information, or the environmental category of the part.

Multiple part markings will be inside parentheses. Only one part marking contained in parentheses and separated by a "~" will appear on a part. If a line is indented then it is a continuation of the previous line and the two combined represent the entire part marking for that device.

Important Information and Disclaimer: The information provided on this page represents TI's knowledge and belief as of the date that it is provided. TI bases its knowledge and belief on information provided by third parties, and makes no representation or warranty as to the accuracy of such information. Efforts are underway to better integrate information from third parties. TI has taken and continues to take reasonable steps to provide representative and accurate information but may not have conducted destructive testing or chemical analysis on incoming materials and chemicals. TI and TI suppliers consider certain information to be proprietary, and thus CAS numbers and other limited information may not be available for release.

In no event shall TI's liability arising out of such information exceed the total purchase price of the TI part(s) at issue in this document sold by TI to Customer on an annual basis.

TAPE AND REEL INFORMATION

REEL DIMENSIONS

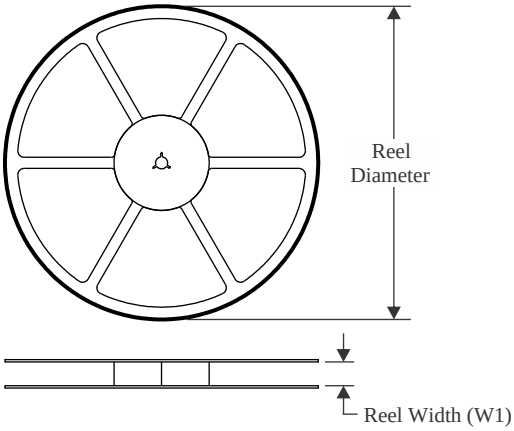

TAPE DIMENSIONS

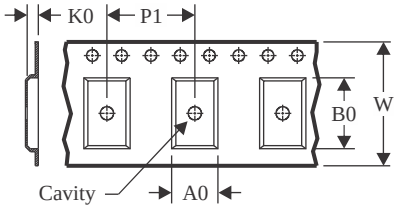

A0	Dimension designed to accommodate the component width
B0	Dimension designed to accommodate the component length
K0	Dimension designed to accommodate the component thickness
W	Overall width of the carrier tape
P1	Pitch between successive cavity centers

QUADRANT ASSIGNMENTS FOR PIN 1 ORIENTATION IN TAPE

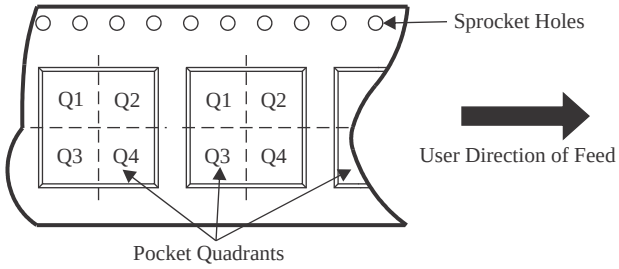

*All dimensions are nominal

Device	Package Type	Package Drawing	Pins	SPQ	Reel Diameter (mm)	Reel Width W1 (mm)	A0 (mm)	B0 (mm)	K0 (mm)	P1 (mm)	W (mm)	Pin1 Quadrant
SN65LVCP23PWR	TSSOP	PW	16	2000	330.0	12.4	6.9	5.6	1.6	8.0	12.0	Q1
SN65LVCP23PWRG4	TSSOP	PW	16	2000	330.0	12.4	6.9	5.6	1.6	8.0	12.0	Q1

TAPE AND REEL BOX DIMENSIONS

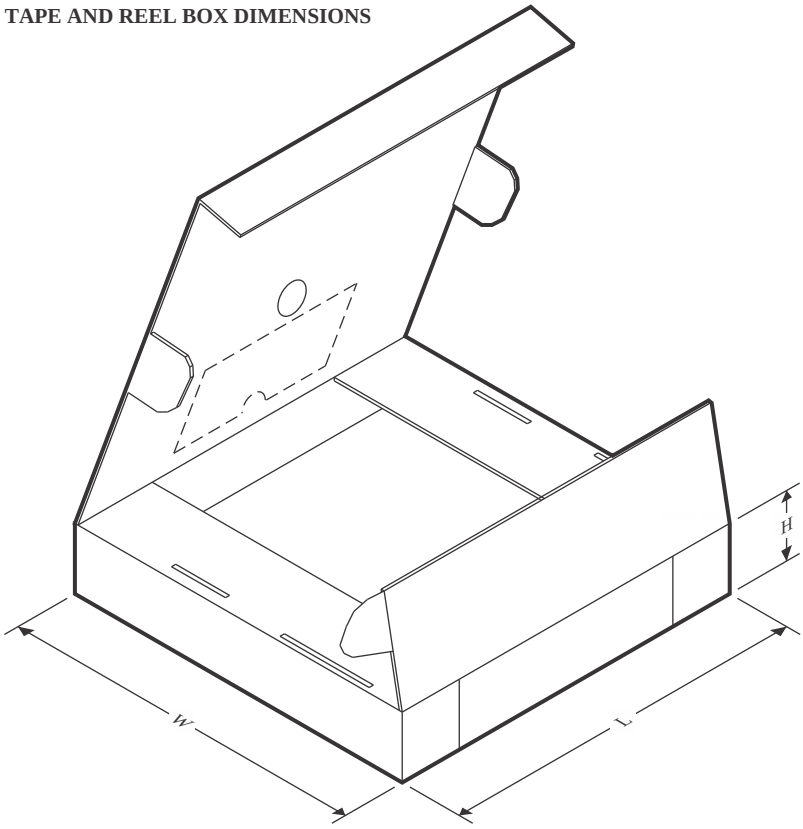

*All dimensions are nominal

Device	Package Type	Package Drawing	Pins	SPQ	Length (mm)	Width (mm)	Height (mm)
SN65LVCP23PWR	TSSOP	PW	16	2000	350.0	350.0	43.0
SN65LVCP23PWRG4	TSSOP	PW	16	2000	350.0	350.0	43.0

TUBE

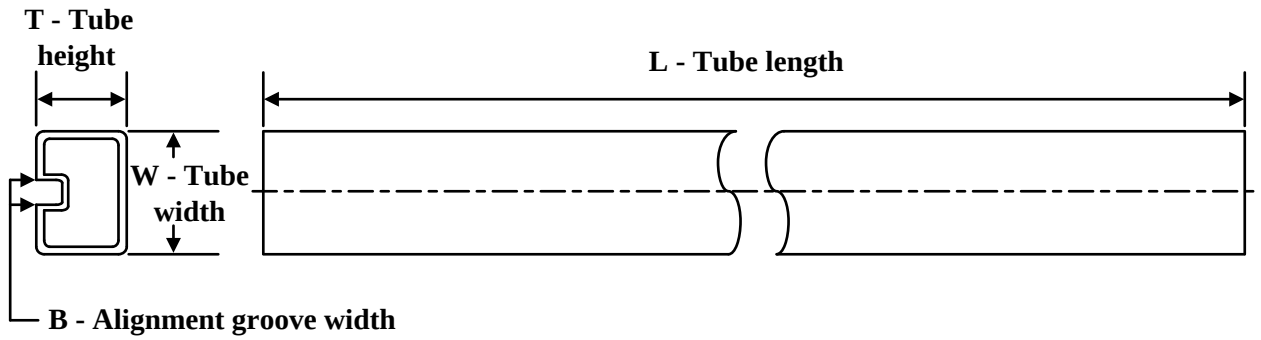

*All dimensions are nominal

Device	Package Name	Package Type	Pins	SPQ	L (mm)	W (mm)	T (µm)	B (mm)
SN65LVCP23D	D	SOIC	16	40	505.46	6.76	3810	4
SN65LVCP23D.B	D	SOIC	16	40	505.46	6.76	3810	4
SN65LVCP23PW	PW	TSSOP	16	90	530	10.2	3600	3.5
SN65LVCP23PW.B	PW	TSSOP	16	90	530	10.2	3600	3.5

PACKAGE OUTLINE

PW0016A

TSSOP - 1.2 mm max height

SMALL OUTLINE PACKAGE

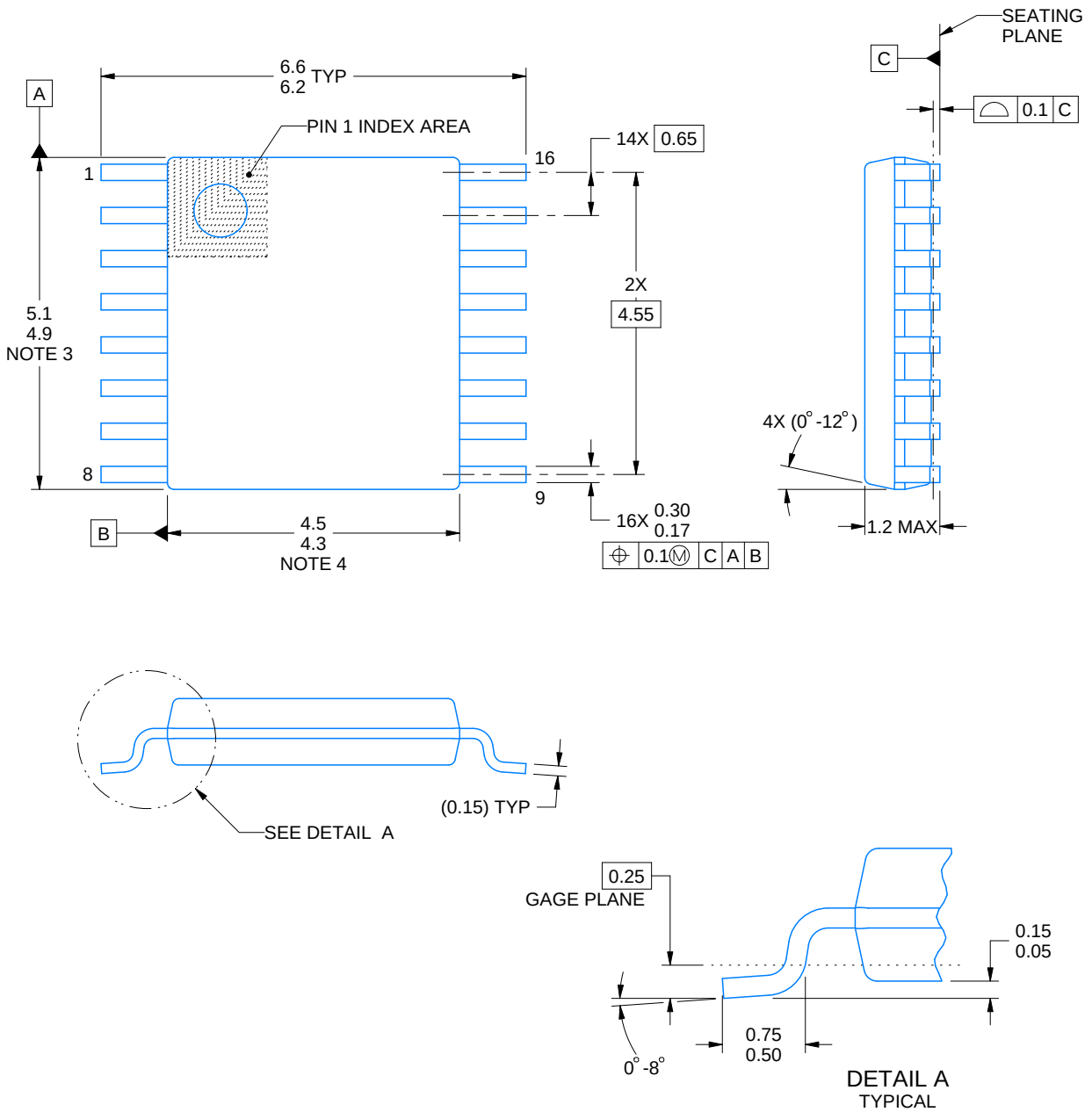

NOTES:

1. All linear dimensions are in millimeters. Any dimensions in parenthesis are for reference only. Dimensioning and tolerancing per ASME Y14.5M.
2. This drawing is subject to change without notice.
3. This dimension does not include mold flash, protrusions, or gate burrs. Mold flash, protrusions, or gate burrs shall not exceed 0.15 mm per side.
4. This dimension does not include interlead flash. Interlead flash shall not exceed 0.25 mm per side.
5. Reference JEDEC registration MO-153.

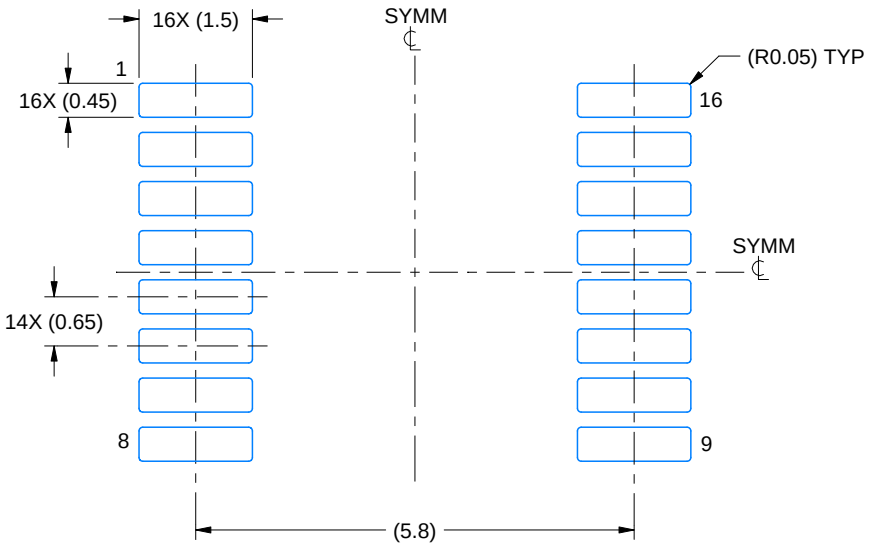

LAND PATTERN EXAMPLE
EXPOSED METAL SHOWN
SCALE: 10X



SOLDER MASK DETAILS

4220204/B 12/2023

NOTES: (continued)

6. Publication IPC-7351 may have alternate designs.
7. Solder mask tolerances between and around signal pads can vary based on board fabrication site.

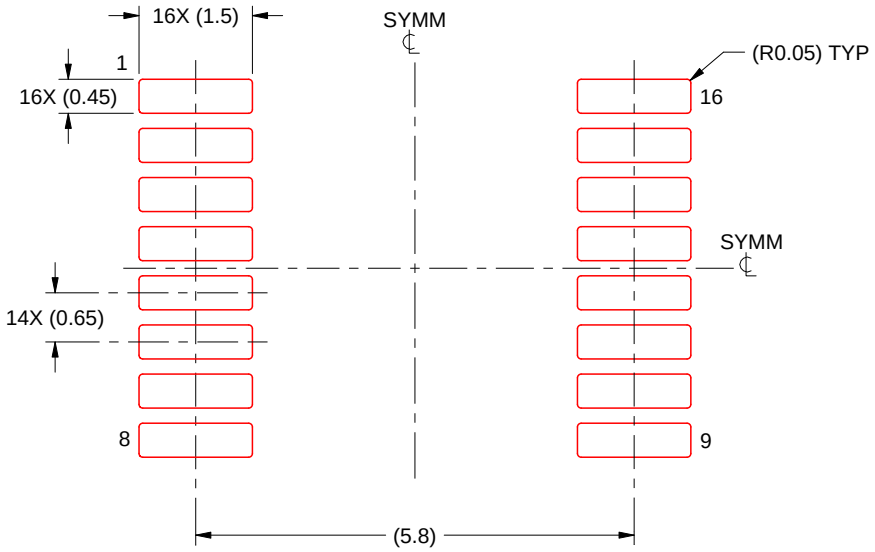

SOLDER PASTE EXAMPLE
BASED ON 0.125 mm THICK STENCIL
SCALE: 10X

4220204/B 12/2023

NOTES: (continued)

8. Laser cutting apertures with trapezoidal walls and rounded corners may offer better paste release. IPC-7525 may have alternate design recommendations.
9. Board assembly site may have different recommendations for stencil design.

D (R–PDSO–G16) PLASTIC SMALL OUTLINE

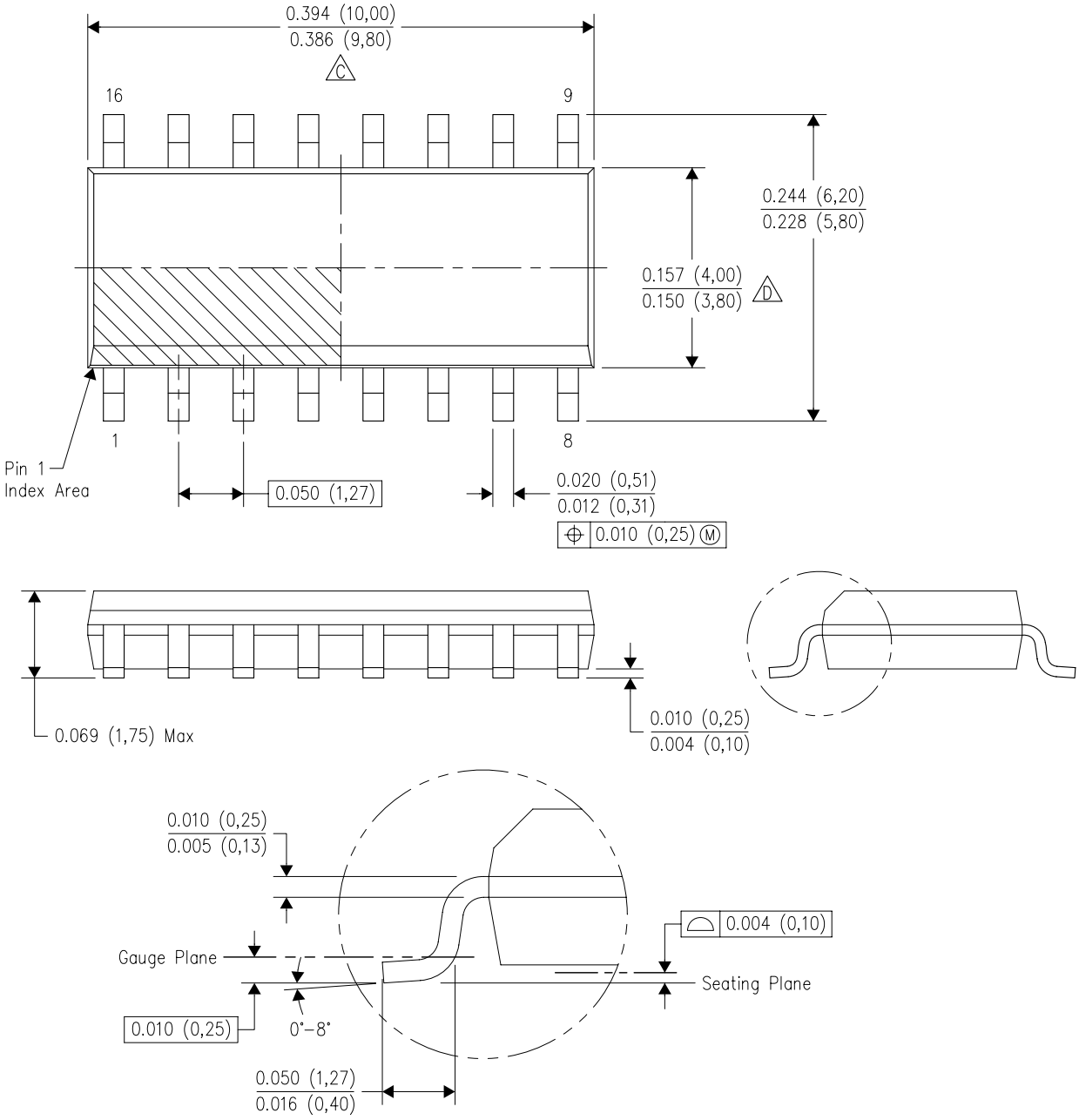

NOTES:
A. All linear dimensions are in inches (millimeters).
B. This drawing is subject to change without notice.
C. Body length does not include mold flash, protrusions, or gate burrs. Mold flash, protrusions, or gate burrs shall not exceed 0.006 (0,15) each side.
D. Body width does not include interlead flash. Interlead flash shall not exceed 0.017 (0,43) each side.
E. Reference JEDEC MS–012 variation AC.

IMPORTANT NOTICE AND DISCLAIMER

TI PROVIDES TECHNICAL AND RELIABILITY DATA (INCLUDING DATA SHEETS), DESIGN RESOURCES (INCLUDING REFERENCE DESIGNS), APPLICATION OR OTHER DESIGN ADVICE, WEB TOOLS, SAFETY INFORMATION, AND OTHER RESOURCES “AS IS” AND WITH ALL FAULTS, AND DISCLAIMS ALL WARRANTIES, EXPRESS AND IMPLIED, INCLUDING WITHOUT LIMITATION ANY IMPLIED WARRANTIES OF MERCHANTABILITY, FITNESS FOR A PARTICULAR PURPOSE OR NON-INFRINGEMENT OF THIRD PARTY INTELLECTUAL PROPERTY RIGHTS.

These resources are intended for skilled developers designing with TI products. You are solely responsible for (1) selecting the appropriate TI products for your application, (2) designing, validating and testing your application, and (3) ensuring your application meets applicable standards, and any other safety, security, regulatory or other requirements.

These resources are subject to change without notice. TI grants you permission to use these resources only for development of an application that uses the TI products described in the resource. Other reproduction and display of these resources is prohibited. No license is granted to any other TI intellectual property right or to any third party intellectual property right. TI disclaims responsibility for, and you will fully indemnify TI and its representatives against, any claims, damages, costs, losses, and liabilities arising out of your use of these resources.

TI’s products are provided subject to TI’s Terms of Sale or other applicable terms available either on ti.com or provided in conjunction with such TI products. TI’s provision of these resources does not expand or otherwise alter TI’s applicable warranties or warranty disclaimers for TI products.

TI objects to and rejects any additional or different terms you may have proposed.

Mailing Address: Texas Instruments, Post Office Box 655303, Dallas, Texas 75265
Copyright © 2025, Texas Instruments Incorporated