LOW-POWER DUAL 2-INPUT POSITIVE-NAND GATE

Check for Samples: SN74AUP2G00

FEATURES

- **Available in the Texas Instruments NanoStar™ Package**
- **Low Static-Power Consumption (I_{CC} = 0.9 μA Maximum)**
- **Low Dynamic-Power Consumption (C_{pd} = 4.3 pF Typ at 3.3 V)**
- **Low Input Capacitance (C_i = 1.5 pF Typical)**
- **Low Noise – Overshoot and Undershoot <10% of V_{CC}**
- **I_{off} Supports Partial-Power-Down Mode Operation**
- **Wide Operating V_{CC} Range of 0.8 V to 3.6 V**
- **Optimized for 3.3-V Operation**
- **3.6-V I/O Tolerant to Support Mixed-Mode Signal Operation**
- **t_{pd} = 5.9 ns Maximum at 3.3 V**
- **Suitable for Point-to-Point Applications**
- **Latch-Up Performance Exceeds 100 mA Per JESD 78, Class II**
- **ESD Performance Tested Per JESD 22**
  - **2000-V Human-Body Model (A114-B, Class II)**
  - **1000-V Charged-Device Model (C101)**

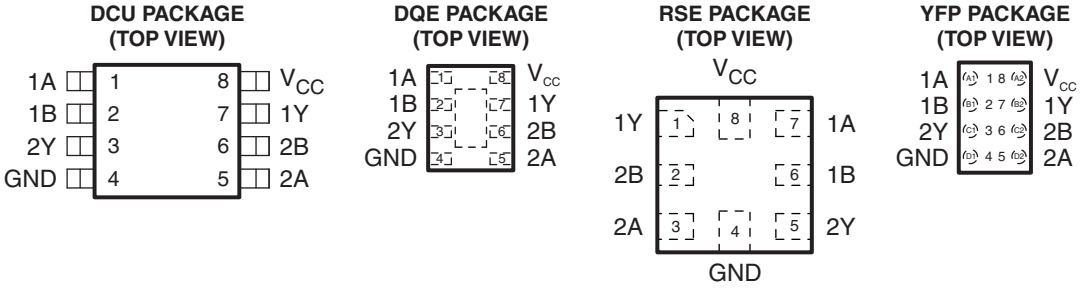

See mechanical drawings for dimensions.

DESCRIPTION/ORDERING INFORMATION

The AUP family is TI's premier solution to the industry's low-power needs in battery-powered portable applications. This family ensures a very low static- and dynamic-power consumption across the entire V_{CC} range of 0.8 V to 3.6 V, resulting in increased battery life (see Figure 1). This product also maintains excellent signal integrity (see the very low undershoot and overshoot characteristics shown in Figure 2).

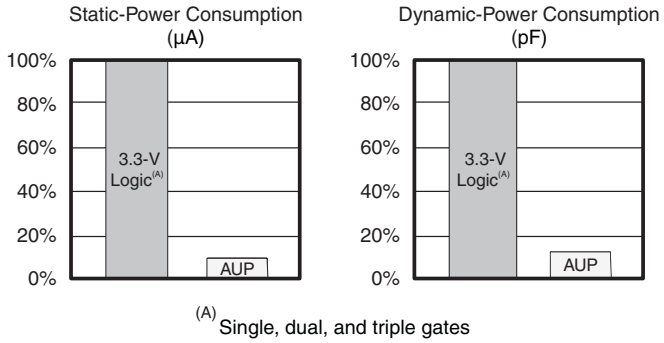

Figure 1. AUP – The Lowest-Power Family

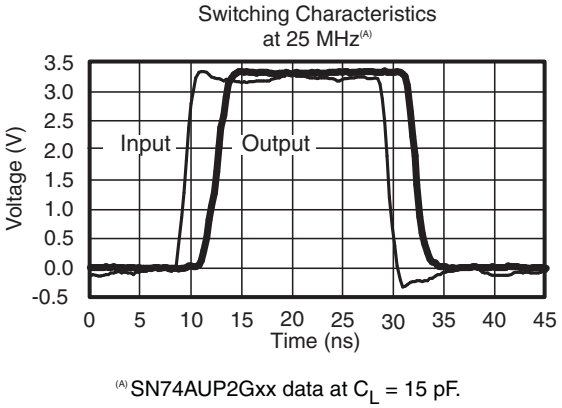

Figure 2. Excellent Signal Integrity

Please be aware that an important notice concerning availability, standard warranty, and use in critical applications of Texas Instruments semiconductor products and disclaimers thereto appears at the end of this data sheet.

PRODUCTION DATA information is current as of publication date. Products conform to specifications per the terms of the Texas Instruments standard warranty. Production processing does not necessarily include testing of all parameters.

Copyright © 2009–2010, Texas Instruments Incorporated

The SN74AUP2G00 performs the Boolean function $Y = \overline{A \bullet B}$ or $Y = \overline{A} + \overline{B}$ in positive logic.

NanoStar™ package technology is a major breakthrough in IC packaging concepts, using the die as the package.

This device is fully specified for partial-power-down applications using I_{off}. The I_{off} circuitry disables the outputs, preventing damaging current backflow through the device when it is powered down.

ORDERING INFORMATION

T_A	PACKAGE(1) (2)		ORDERABLE PART NUMBER	TOP-SIDE MARKING(3)
–40°C to 85°C	NanoStar™ – WCSP (DSBGA) 0.23-mm Large Bump – YFP (Pb-free)	Reel of 3000	SN74AUP2G00YFPR	_ _ _ H A _
	uQFN – DQE	Reel of 5000	SN74AUP2G00DQER	PN
	QFN – RSE	Reel of 5000	SN74AUP2G00RSER	PN
	SSOP – DCU	Reel of 3000	SN74AUP2G00DCUR	H00_

(1) Package drawings, thermal data, and symbolization are available at www.ti.com/packaging.
(2) For the most current package and ordering information, see the Package Option Addendum at the end of this document, or see the TI website at www.ti.com.
(3) DCU: The actual top-side marking has one additional character that designates the wafer fab/assembly site.
YFP: The actual top-side marking has three preceding characters to denote year, month, and sequence code, and one following character to designate the wafer fab/assembly site. Pin 1 identifier indicates solder-bump composition (1 = SnPb, • = Pb-free).

FUNCTION TABLE

INPUTS		OUTPUT
A	B	Y
L	L	H
L	X	H
X	L	H
H	H	L

LOGIC DIAGRAM (POSITIVE LOGIC)

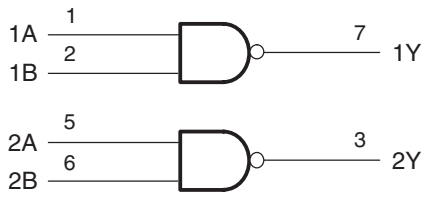

Pin number shown are for DCU and DQE packages.

Copyright © 2009–2010, Texas Instruments Incorporated

ABSOLUTE MAXIMUM RATINGS(1)

over operating free-air temperature range (unless otherwise noted)

			MIN	MAX	UNIT
V_{CC}	Supply voltage range		–0.5	4.6	V
V_I	Input voltage range(2)		–0.5	4.6	V
V_O	Voltage range applied to any output in the high-impedance or power-off state(2)		–0.5	4.6	V
V_O	Output voltage range in the high or low state(2)		–0.5	V_{CC} + 0.5	V
I_{IK}	Input clamp current	V_I < 0		–50	mA
I_{OK}	Output clamp current	V_O < 0		–50	mA
I_O	Continuous output current			±20	mA
	Continuous current through V_{CC} or GND			±50	mA
θ_{JA}	Package thermal impedance(3)	DCU package		220	°C/W
		DQE package		261	
		RSE package		253	
		YFP package		132	
T_{stg}	Storage temperature range		–65	150	°C

(1) Stresses beyond those listed under "absolute maximum ratings" may cause permanent damage to the device. These are stress ratings only, and functional operation of the device at these or any other conditions beyond those indicated under "recommended operating conditions" is not implied. Exposure to absolute-maximum-rated conditions for extended periods may affect device reliability.
(2) The input negative-voltage and output voltage ratings may be exceeded if the input and output current ratings are observed.
(3) The package thermal impedance is calculated in accordance with JESD 51-7.

Copyright © 2009–2010, Texas Instruments Incorporated

RECOMMENDED OPERATING CONDITIONS(1)

			MIN	MAX	UNIT
V_{CC}	Supply voltage		0.8	3.6	V
V_{IH}	High-level input voltage	V_{CC} = 0.8 V	V_{CC}		V
		V_{CC} = 1.1 V to 1.95 V	0.65 × V_{CC}		
		V_{CC} = 2.3 V to 2.7 V	1.6		
		V_{CC} = 3 V to 3.6 V	2		
V_{IL}	Low-level input voltage	V_{CC} = 0.8 V		0	V
		V_{CC} = 1.1 V to 1.95 V		0.35 × V_{CC}	
		V_{CC} = 2.3 V to 2.7 V		0.7	
		V_{CC} = 3 V to 3.6 V		0.9	
V_I	Input voltage		0	3.6	V
V_O	Output voltage		0	V_{CC}	V
I_{OH}	High-level output current	V_{CC} = 0.8 V		–20	μA
		V_{CC} = 1.1 V		–1.1	mA
		V_{CC} = 1.4 V		–1.7	
		V_{CC} = 1.65		–1.9	
		V_{CC} = 2.3 V		–3.1	
		V_{CC} = 3 V		–4	
I_{OL}	Low-level output current	V_{CC} = 0.8 V		20	μA
		V_{CC} = 1.1 V		1.1	mA
		V_{CC} = 1.4 V		1.7	
		V_{CC} = 1.65 V		1.9	
		V_{CC} = 2.3 V		3.1	
		V_{CC} = 3 V		4	
Δt/Δv	Input transition rise or fall rate	V_{CC} = 0.8 V to 3.6 V		200	ns/V
T_A	Operating free-air temperature		–40	85	°C

(1) All unused inputs of the device must be held at V_{CC} or GND to ensure proper device operation. See the TI application report *Implications of Slow or Floating CMOS Inputs*, literature number SCBA004.

Copyright © 2009–2010, Texas Instruments Incorporated

ELECTRICAL CHARACTERISTICS

over recommended operating free-air temperature range (unless otherwise noted)

PARAMETER	TEST CONDITIONS	V_{CC}	T_A = 25°C			T_A = –40°C to 85°C		UNIT
			MIN	TYP	MAX	MIN	MAX	
V_{OH}	I_{OH} = –20 μA	0.8 V to 3.6 V	V_{CC} – 0.1			V_{CC} – 0.1		V
	I_{OH} = –1.1 mA	1.1 V	0.75 × V_{CC}			0.7 × V_{CC}		
	I_{OH} = –1.7 mA	1.4 V	1.11			1.03		
	I_{OH} = –1.9 mA	1.65 V	1.32			1.3		
	I_{OH} = –2.3 mA	2.3 V	2.05			1.97		
	I_{OH} = –3.1 mA		1.9			1.85		
	I_{OH} = –2.7 mA	3 V	2.72			2.67		
	I_{OH} = –4 mA		2.6			2.55		
V_{OL}	I_{OL} = 20 μA	0.8 V to 3.6 V			0.1		0.1	V
	I_{OL} = 1.1 mA	1.1 V			0.3 × V_{CC}		0.3 × V_{CC}	
	I_{OL} = 1.7 mA	1.4 V			0.31		0.37	
	I_{OL} = 1.9 mA	1.65 V			0.31		0.35	
	I_{OL} = 2.3 mA	2.3 V			0.31		0.33	
	I_{OL} = 3.1 mA				0.44		0.45	
	I_{OL} = 2.7 mA	3 V			0.31		0.33	
	I_{OL} = 4 mA				0.44		0.45	
I_I A or B input	V_I = GND to 3.6 V	0 V to 3.6 V			0.1		0.5	μA
I_{off}	V_I or V_O = 0 V to 3.6 V	0 V			0.2		0.6	μA
ΔI_{off}	V_I or V_O = 0 V to 3.6 V	0 V to 0.2 V			0.2		0.6	μA
I_{CC}	V_I = GND or (V_{CC} to 3.6 V), I_O = 0	0.8 V to 3.6 V			0.5		0.9	μA
ΔI_{CC}	V_I = V_{CC} – 0.6 V(1), I_O = 0	3.3 V			40		50	μA
C_i	V_I = V_{CC} or GND	0 V		1.5				pF
		3.6 V		1.5				
C_o	V_O = GND	0 V		3				pF

(1) One input at V_{CC} – 0.6 V, other input at V_{CC} or GND

SWITCHING CHARACTERISTICS

over recommended operating free-air temperature range, C_L = 5 pF (unless otherwise noted) (see Figure 3 and Figure 4)

PARAMETER	FROM (INPUT)	TO (OUTPUT)	V_{CC}	T_A = 25°C			T_A = –40°C to 85°C		UNIT
				MIN	TYP	MAX	MIN	MAX	
t_{pd}	A or B	Y	0.8 V		19.8				ns
			1.2 V ± 0.1 V	2.6	7.8	18.8	2.1	19.8	
			1.5 V ± 0.1 V	1.4	5.4	11.8	0.9	13.9	
			1.8 V ± 0.15 V	1	4.3	9	0.5	11.1	
			2.5 V ± 0.2 V	1	3	5.9	0.5	7.8	
			3.3 V ± 0.3 V	1	2.4	4.9	0.5	5.9	

Copyright © 2009–2010, Texas Instruments Incorporated

SWITCHING CHARACTERISTICS

over recommended operating free-air temperature range, C_L = 10 pF (unless otherwise noted) (see Figure 3 and Figure 4)

PARAMETER	FROM (INPUT)	TO (OUTPUT)	V_{CC}	T_A = 25°C			T_A = –40°C to 85°C		UNIT
				MIN	TYP	MAX	MIN	MAX	
t_{pd}	A or B	Y	0.8 V		23.1				ns
			1.2 V ± 0.1 V	1.5	8.9	21.1	1	22	
			1.5 V ± 0.1 V	1	6.3	13.2	0.5	15.1	
			1.8 V ± 0.15 V	1	5	10.1	0.5	12.2	
			2.5 V ± 0.2 V	1	3.6	7.4	0.5	9	
			3.3 V ± 0.3 V	1	2.9	5.2	0.5	6.5	

SWITCHING CHARACTERISTICS

over recommended operating free-air temperature range, C_L = 15 pF (unless otherwise noted) (see Figure 3 and Figure 4)

PARAMETER	FROM (INPUT)	TO (OUTPUT)	V_{CC}	T_A = 25°C			T_A = –40°C to 85°C		UNIT
				MIN	TYP	MAX	MIN	MAX	
t_{pd}	A or B	Y	0.8 V		24.7				ns
			1.2 V ± 0.1 V	3.6	9.8	21.7	3.1	22.7	
			1.5 V ± 0.1 V	2.3	4.6	14	1.8	15.7	
			1.8 V ± 0.15 V	1.6	5.5	10.6	1.1	12.6	
			2.5 V ± 0.2 V	1	4	7	0.5	8.9	
			3.3 V ± 0.3 V	1	3.3	5.6	0.5	6.9	

SWITCHING CHARACTERISTICS

over recommended operating free-air temperature range, C_L = 30 pF (unless otherwise noted) (see Figure 3 and Figure 4)

PARAMETER	FROM (INPUT)	TO (OUTPUT)	V_{CC}	T_A = 25°C			T_A = –40°C to 85°C		UNIT
				MIN	TYP	MAX	MIN	MAX	
t_{pd}	A or B	Y	0.8 V		31.8				ns
			1.2 V ± 0.1 V	4.9	12.6	26.3	4.4	27	
			1.5 V ± 0.1 V	3.4	9	16.6	2.9	18.3	
			1.8 V ± 0.15 V	2.5	7.3	12.9	2	14.8	
			2.5 V ± 0.2 V	1.8	5.4	8.8	1.3	10.5	
			3.3 V ± 0.3 V	1.5	4.5	6.7	1	8.2	

OPERATING CHARACTERISTICS

T_A = 25°C

PARAMETER		TEST CONDITIONS	V_{CC}	TYP	UNIT
C_{pd}	Power dissipation capacitance	f = 10 MHz	0.8 V	4	pF
			1.2 V ± 0.1 V	4	
			1.5 V ± 0.1 V	4	
			1.8 V ± 0.15 V	4	
			2.5 V ± 0.2 V	4.1	
			3.3 V ± 0.3 V	4.3	

Copyright © 2009–2010, Texas Instruments Incorporated

PARAMETER MEASUREMENT INFORMATION
(Propagation Delays, Setup and Hold Times, and Pulse Width)

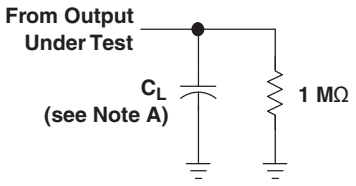

LOAD CIRCUIT

	V_{CC} = 0.8 V	V_{CC} = 1.2 V ± 0.1 V	V_{CC} = 1.5 V ± 0.1 V	V_{CC} = 1.8 V ± 0.15 V	V_{CC} = 2.5 V ± 0.2 V	V_{CC} = 3.3 V ± 0.3 V
C_L	5, 10, 15, 30 pF	5, 10, 15, 30 pF	5, 10, 15, 30 pF	5, 10, 15, 30 pF	5, 10, 15, 30 pF	5, 10, 15, 30 pF
V_M	$V_{CC}/2$	$V_{CC}/2$	$V_{CC}/2$	$V_{CC}/2$	$V_{CC}/2$	$V_{CC}/2$
V_I	V_{CC}	V_{CC}	V_{CC}	V_{CC}	V_{CC}	V_{CC}

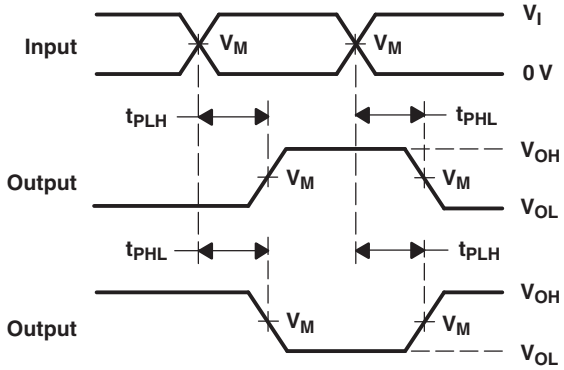

VOLTAGE WAVEFORMS
PROPAGATION DELAY TIMES
INVERTING AND NONINVERTING OUTPUTS

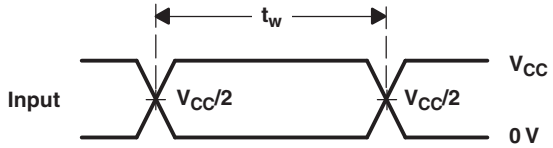

VOLTAGE WAVEFORMS
PULSE DURATION

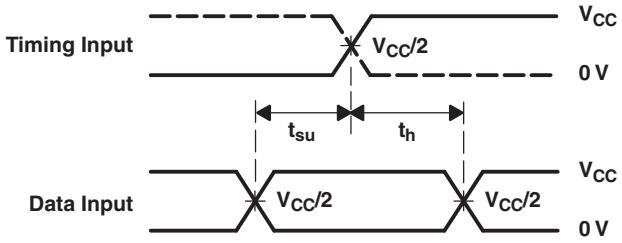

VOLTAGE WAVEFORMS
SETUP AND HOLD TIMES

A. C_L includes probe and jig capacitance.

B. Waveform 1 is for an output with internal conditions such that the output is low, except when disabled by the output control. Waveform 2 is for an output with internal conditions such that the output is high, except when disabled by the output control.

C. All input pulses are supplied by generators having the following characteristics: PRR ≤ 10 MHz, Z_O = 50 Ω, for propagation delays t_r/t_f = 3 ns, for setup and hold times and pulse width t_r/t_f = 1.2 ns.

D. The outputs are measured one at a time, with one transition per measurement.

E. t_{PLH} and t_{PHL} are the same as t_{pd}.

F. All parameters and waveforms are not applicable to all devices.

Figure 3. Load Circuit and Voltage Waveforms

Copyright © 2009–2010, Texas Instruments Incorporated

PARAMETER MEASUREMENT INFORMATION
(Enable and Disable Times)

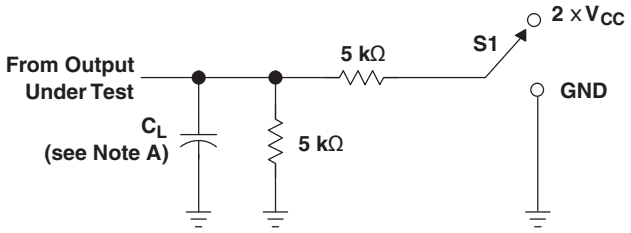

TEST	S1
t_{PLZ}/t_{PZL} t_{PHZ}/t_{PZH}	2 × V_{CC} GND

LOAD CIRCUIT

	V_{CC} = 0.8 V	V_{CC} = 1.2 V ± 0.1 V	V_{CC} = 1.5 V ± 0.1 V	V_{CC} = 1.8 V ± 0.15 V	V_{CC} = 2.5 V ± 0.2 V	V_{CC} = 3.3 V ± 0.3 V
C_L	5, 10, 15, 30 pF	5, 10, 15, 30 pF	5, 10, 15, 30 pF	5, 10, 15, 30 pF	5, 10, 15, 30 pF	5, 10, 15, 30 pF
V_M	$V_{CC}/2$	$V_{CC}/2$	$V_{CC}/2$	$V_{CC}/2$	$V_{CC}/2$	$V_{CC}/2$
V_I	V_{CC}	V_{CC}	V_{CC}	V_{CC}	V_{CC}	V_{CC}
V_Δ	0.1 V	0.1 V	0.1 V	0.15 V	0.15 V	0.3 V

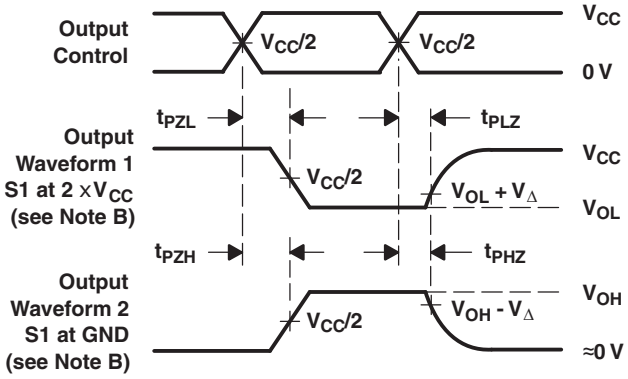

VOLTAGE WAVEFORMS
ENABLE AND DISABLE TIMES
LOW- AND HIGH-LEVEL ENABLING

A. C_L includes probe and jig capacitance.

B. Waveform 1 is for an output with internal conditions such that the output is low, except when disabled by the output control. Waveform 2 is for an output with internal conditions such that the output is high, except when disabled by the output control.

C. All input pulses are supplied by generators having the following characteristics: PRR ≤ 10 MHz, Z_O = 50 Ω, t_r/t_f = 3 ns.

D. The outputs are measured one at a time, with one transition per measurement.

E. t_{PLZ} and t_{PHZ} are the same as t_{dis}.

F. t_{PLH} and t_{PHL} are the same as t_{pd}.

G. All parameters and waveforms are not applicable to all devices.

Figure 4. Load Circuit and Voltage Waveforms

Copyright © 2009–2010, Texas Instruments Incorporated

PACKAGING INFORMATION

Orderable Device	Status (1)	Package Type	Package Drawing	Pins	Package Qty	Eco Plan (2)	Lead finish/ Ball material (6)	MSL Peak Temp (3)	Op Temp (°C)	Device Marking (4/5)	Samples
SN74AUP2G00DCUR	ACTIVE	VSSOP	DCU	8	3000	RoHS & Green	NIPDAU	Level-1-260C-UNLIM	-40 to 85	H00R	Samples
SN74AUP2G00DQER	ACTIVE	X2SON	DQE	8	5000	RoHS & Green	NIPDAUAG	Level-1-260C-UNLIM	-40 to 85	PN	Samples
SN74AUP2G00RSER	ACTIVE	UQFN	RSE	8	5000	RoHS & Green	NIPDAUAG	Level-1-260C-UNLIM	-40 to 85	PN	Samples
SN74AUP2G00YFPR	ACTIVE	DSBGA	YFP	8	3000	RoHS & Green	SNAGCU	Level-1-260C-UNLIM	-40 to 85	HAN	Samples

(1) The marketing status values are defined as follows:
ACTIVE: Product device recommended for new designs.
LIFEBUY: TI has announced that the device will be discontinued, and a lifetime-buy period is in effect.
NRND: Not recommended for new designs. Device is in production to support existing customers, but TI does not recommend using this part in a new design.
PREVIEW: Device has been announced but is not in production. Samples may or may not be available.
OBSOLETE: TI has discontinued the production of the device.

(2) **RoHS:** TI defines "RoHS" to mean semiconductor products that are compliant with the current EU RoHS requirements for all 10 RoHS substances, including the requirement that RoHS substance do not exceed 0.1% by weight in homogeneous materials. Where designed to be soldered at high temperatures, "RoHS" products are suitable for use in specified lead-free processes. TI may reference these types of products as "Pb-Free".
RoHS Exempt: TI defines "RoHS Exempt" to mean products that contain lead but are compliant with EU RoHS pursuant to a specific EU RoHS exemption.
Green: TI defines "Green" to mean the content of Chlorine (Cl) and Bromine (Br) based flame retardants meet JS709B low halogen requirements of <=1000ppm threshold. Antimony trioxide based flame retardants must also meet the <=1000ppm threshold requirement.

(3) MSL, Peak Temp. - The Moisture Sensitivity Level rating according to the JEDEC industry standard classifications, and peak solder temperature.

(4) There may be additional marking, which relates to the logo, the lot trace code information, or the environmental category on the device.

(5) Multiple Device Markings will be inside parentheses. Only one Device Marking contained in parentheses and separated by a "~" will appear on a device. If a line is indented then it is a continuation of the previous line and the two combined represent the entire Device Marking for that device.

(6) Lead finish/Ball material - Orderable Devices may have multiple material finish options. Finish options are separated by a vertical ruled line. Lead finish/Ball material values may wrap to two lines if the finish value exceeds the maximum column width.

Important Information and Disclaimer: The information provided on this page represents TI's knowledge and belief as of the date that it is provided. TI bases its knowledge and belief on information provided by third parties, and makes no representation or warranty as to the accuracy of such information. Efforts are underway to better integrate information from third parties. TI has taken and

continues to take reasonable steps to provide representative and accurate information but may not have conducted destructive testing or chemical analysis on incoming materials and chemicals. TI and TI suppliers consider certain information to be proprietary, and thus CAS numbers and other limited information may not be available for release.

In no event shall TI's liability arising out of such information exceed the total purchase price of the TI part(s) at issue in this document sold by TI to Customer on an annual basis.

OTHER QUALIFIED VERSIONS OF SN74AUP2G00 :

- Automotive: SN74AUP2G00-Q1

NOTE: Qualified Version Definitions:

- Automotive - Q100 devices qualified for high-reliability automotive applications targeting zero defects

TAPE AND REEL INFORMATION

REEL DIMENSIONS

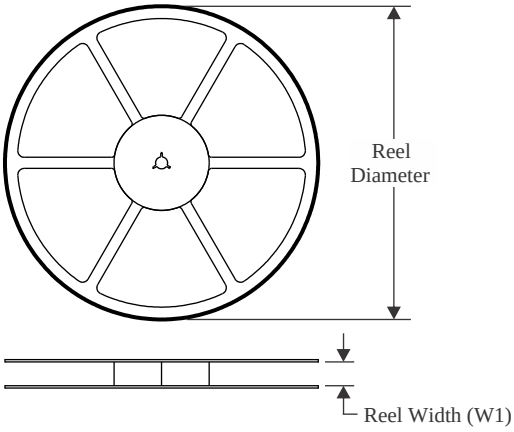

TAPE DIMENSIONS

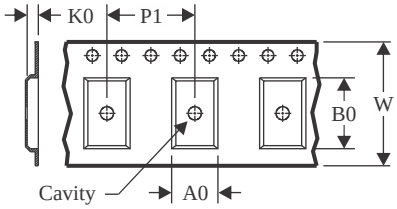

A0	Dimension designed to accommodate the component width
B0	Dimension designed to accommodate the component length
K0	Dimension designed to accommodate the component thickness
W	Overall width of the carrier tape
P1	Pitch between successive cavity centers

QUADRANT ASSIGNMENTS FOR PIN 1 ORIENTATION IN TAPE

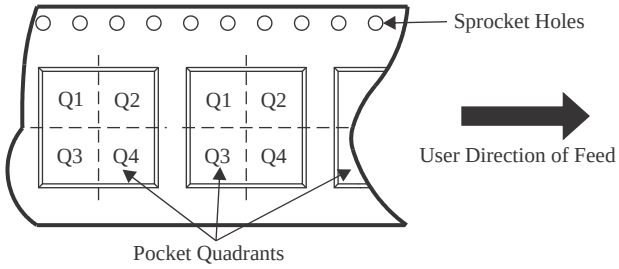

*All dimensions are nominal

Device	Package Type	Package Drawing	Pins	SPQ	Reel Diameter (mm)	Reel Width W1 (mm)	A0 (mm)	B0 (mm)	K0 (mm)	P1 (mm)	W (mm)	Pin1 Quadrant
SN74AUP2G00DCUR	VSSOP	DCU	8	3000	180.0	8.4	2.25	3.35	1.05	4.0	8.0	Q3
SN74AUP2G00DQER	X2SON	DQE	8	5000	180.0	8.4	1.2	1.6	0.55	4.0	8.0	Q1
SN74AUP2G00RSER	UQFN	RSE	8	5000	180.0	8.4	1.7	1.7	0.7	4.0	8.0	Q2
SN74AUP2G00YFPR	DSBGA	YFP	8	3000	178.0	9.2	0.9	1.75	0.6	4.0	8.0	Q1

TAPE AND REEL BOX DIMENSIONS

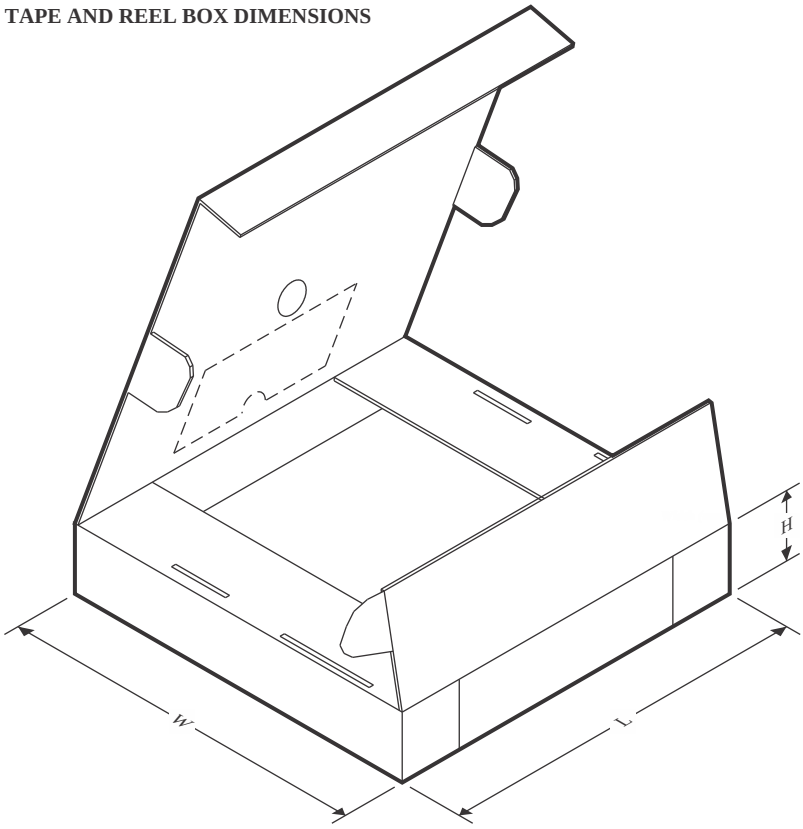

*All dimensions are nominal

Device	Package Type	Package Drawing	Pins	SPQ	Length (mm)	Width (mm)	Height (mm)
SN74AUP2G00DCUR	VSSOP	DCU	8	3000	202.0	201.0	28.0
SN74AUP2G00DQER	X2SON	DQE	8	5000	202.0	201.0	28.0
SN74AUP2G00RSER	UQFN	RSE	8	5000	202.0	201.0	28.0
SN74AUP2G00YFPR	DSBGA	YFP	8	3000	220.0	220.0	35.0

DCU0008A



PACKAGE OUTLINE

VSSOP - 0.9 mm max height

SMALL OUTLINE PACKAGE

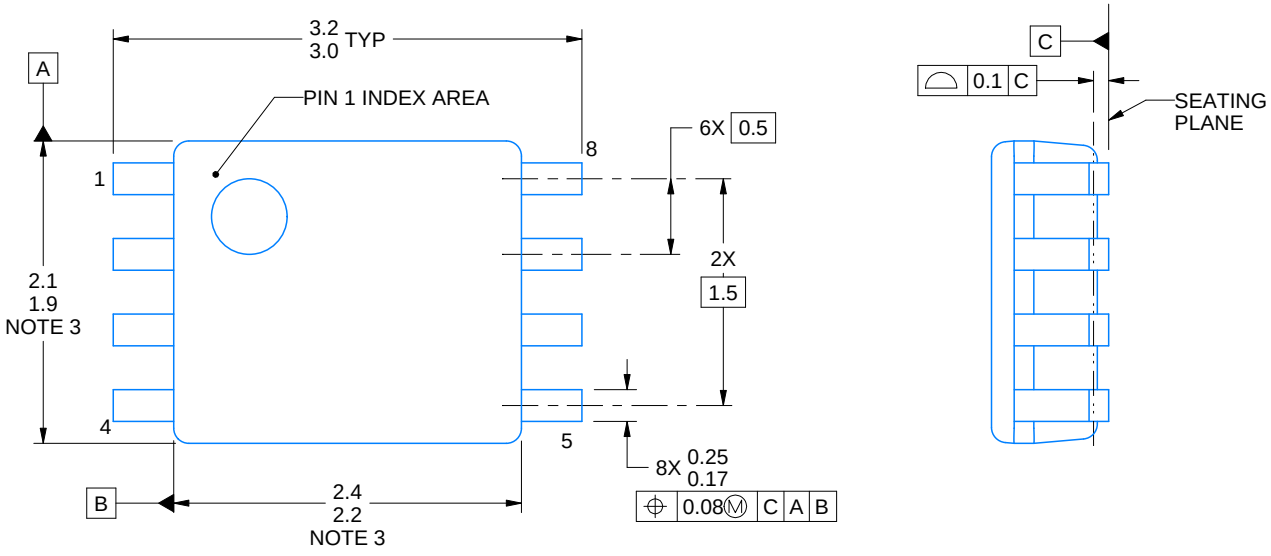

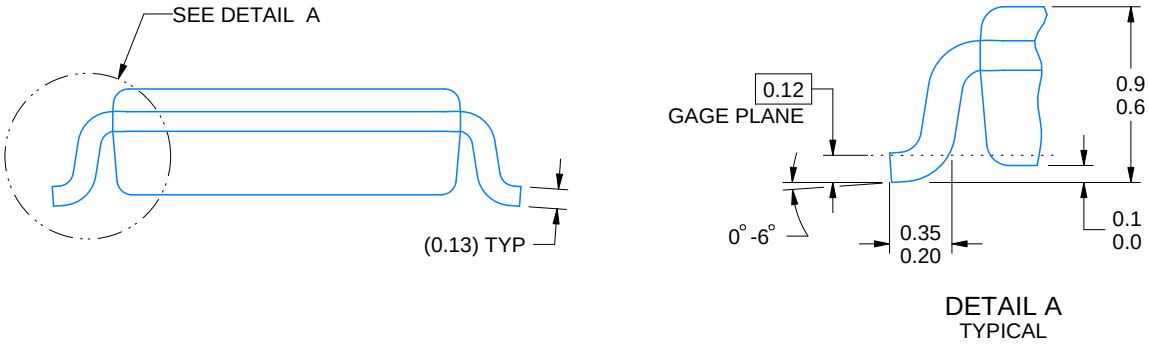

4225266/A 09/2014

NOTES:

1. All linear dimensions are in millimeters. Any dimensions in parenthesis are for reference only. Dimensioning and tolerancing per ASME Y14.5M.
2. This drawing is subject to change without notice.
3. This dimension does not include mold flash, protrusions, or gate burrs. Mold flash, protrusions, or gate burrs shall not exceed 0.15 mm per side.
4. Reference JEDEC registration MO-187 variation CA.

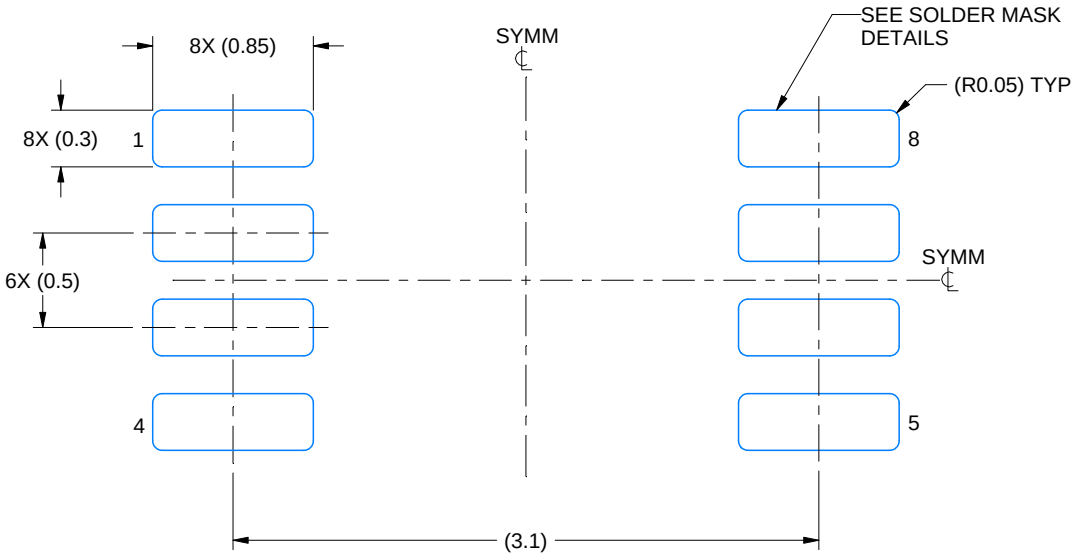

LAND PATTERN EXAMPLE
EXPOSED METAL SHOWN
SCALE: 25X

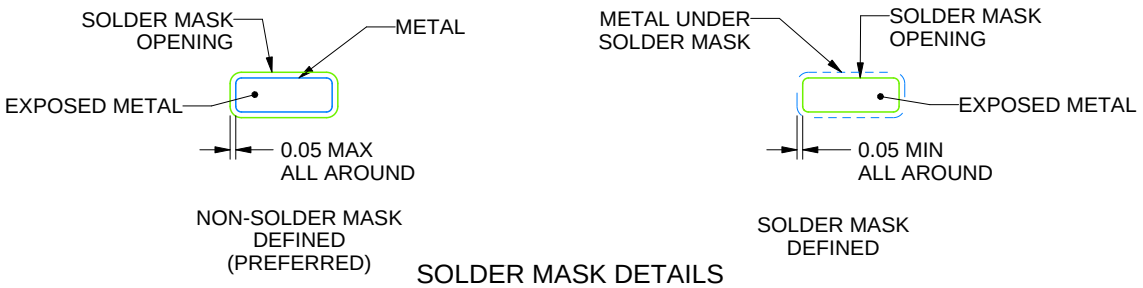

SOLDER MASK DETAILS

4225266/A 09/2014

NOTES: (continued)

5. Publication IPC-7351 may have alternate designs.
6. Solder mask tolerances between and around signal pads can vary based on board fabrication site.

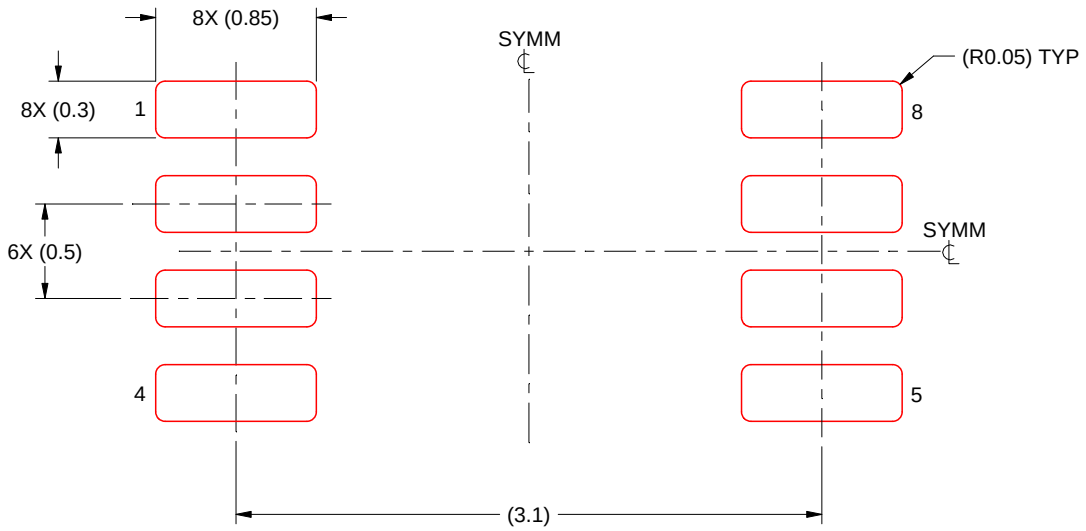

SOLDER PASTE EXAMPLE
BASED ON 0.125 mm THICK STENCIL
SCALE: 25X

4225266/A 09/2014

NOTES: (continued)

7. Laser cutting apertures with trapezoidal walls and rounded corners may offer better paste release. IPC-7525 may have alternate design recommendations.
8. Board assembly site may have different recommendations for stencil design.

PACKAGE OUTLINE

DQE0008A

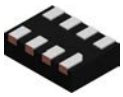

X2SON - 0.4 mm max height

PLASTIC SMALL OUTLINE - NO LEAD

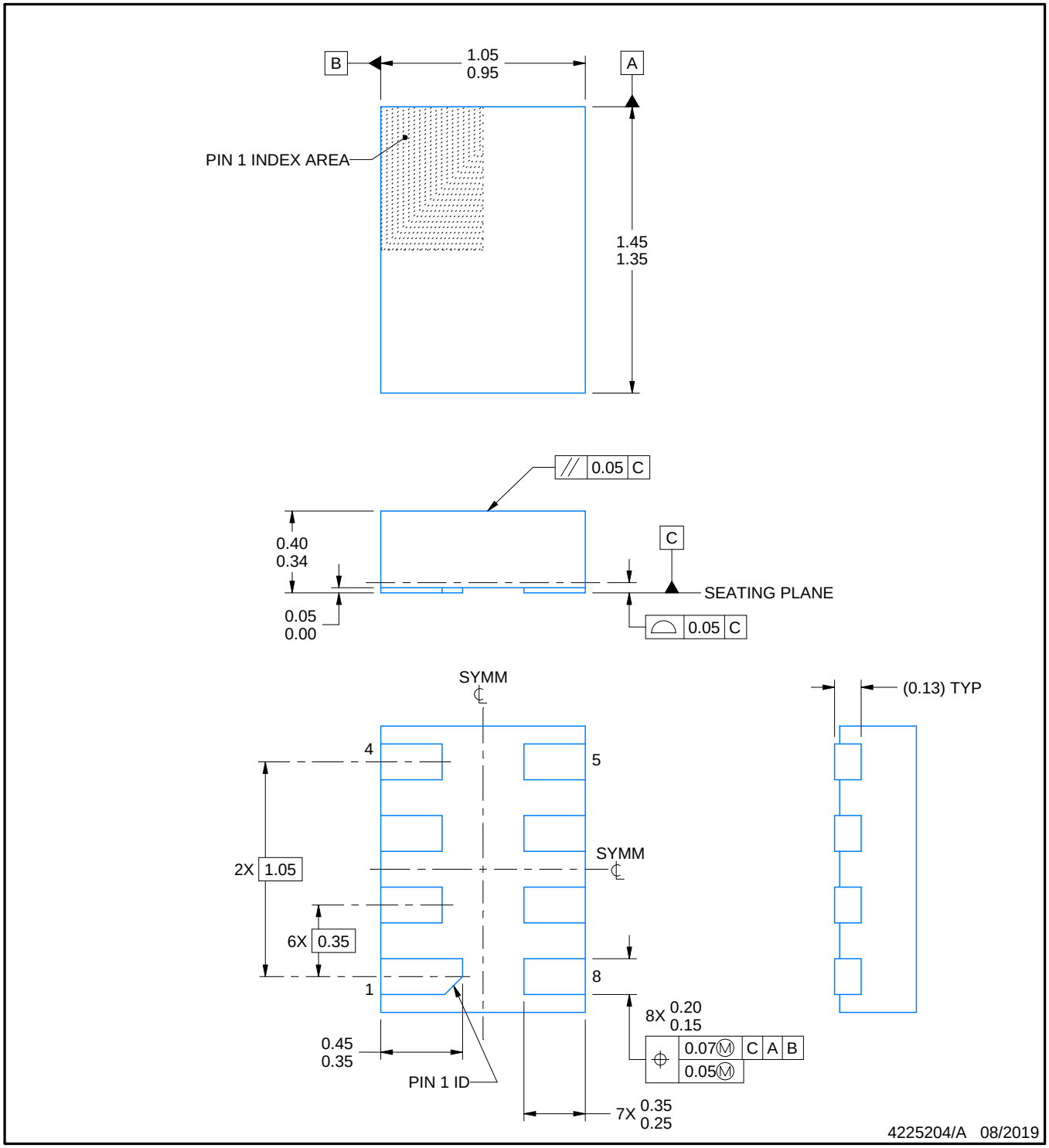

NOTES:

1. All linear dimensions are in millimeters. Any dimensions in parenthesis are for reference only. Dimensioning and tolerancing per ASME Y14.5M.
2. This drawing is subject to change without notice.
3. This package complies to JEDEC MO-287 variation X2EAF.

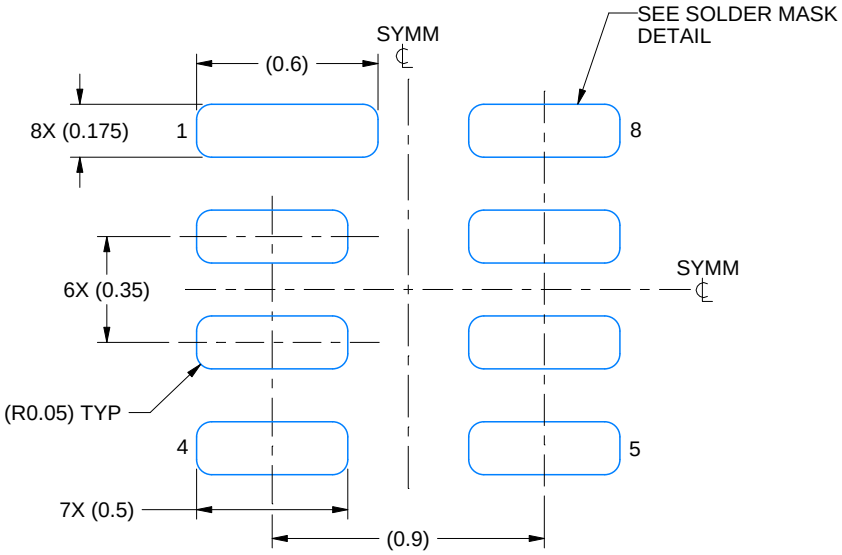

LAND PATTERN EXAMPLE
EXPOSED METAL SHOWN
SCALE: 40X

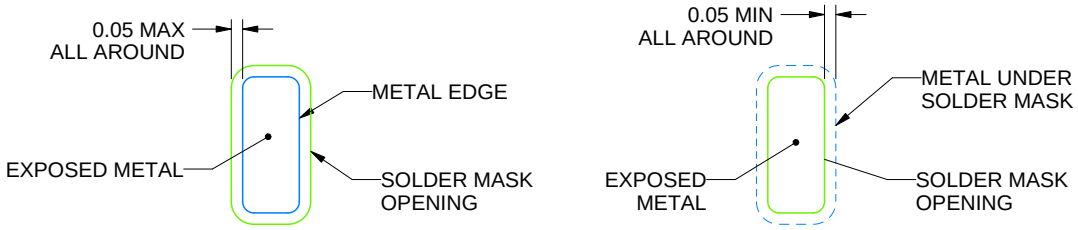

SOLDER MASK DETAILS

4225204/A 08/2019

NOTES: (continued)

4. This package is designed to be soldered to a thermal pad on the board. For more information, see Texas Instruments literature number SLUA271 (www.ti.com/lit/slua271).

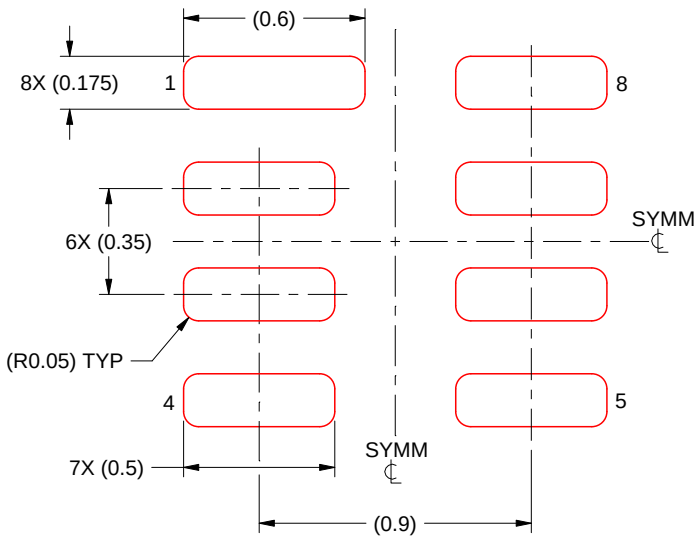

SOLDER PASTE EXAMPLE
BASED ON 0.075 MM THICK STENCIL
SCALE: 40X

4225204/A 08/2019

NOTES: (continued)

5. Laser cutting apertures with trapezoidal walls and rounded corners may offer better paste release. IPC-7525 may have alternate design recommendations.

YFP0008

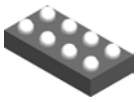

PACKAGE OUTLINE

DSBGA - 0.5 mm max height

DIE SIZE BALL GRID ARRAY

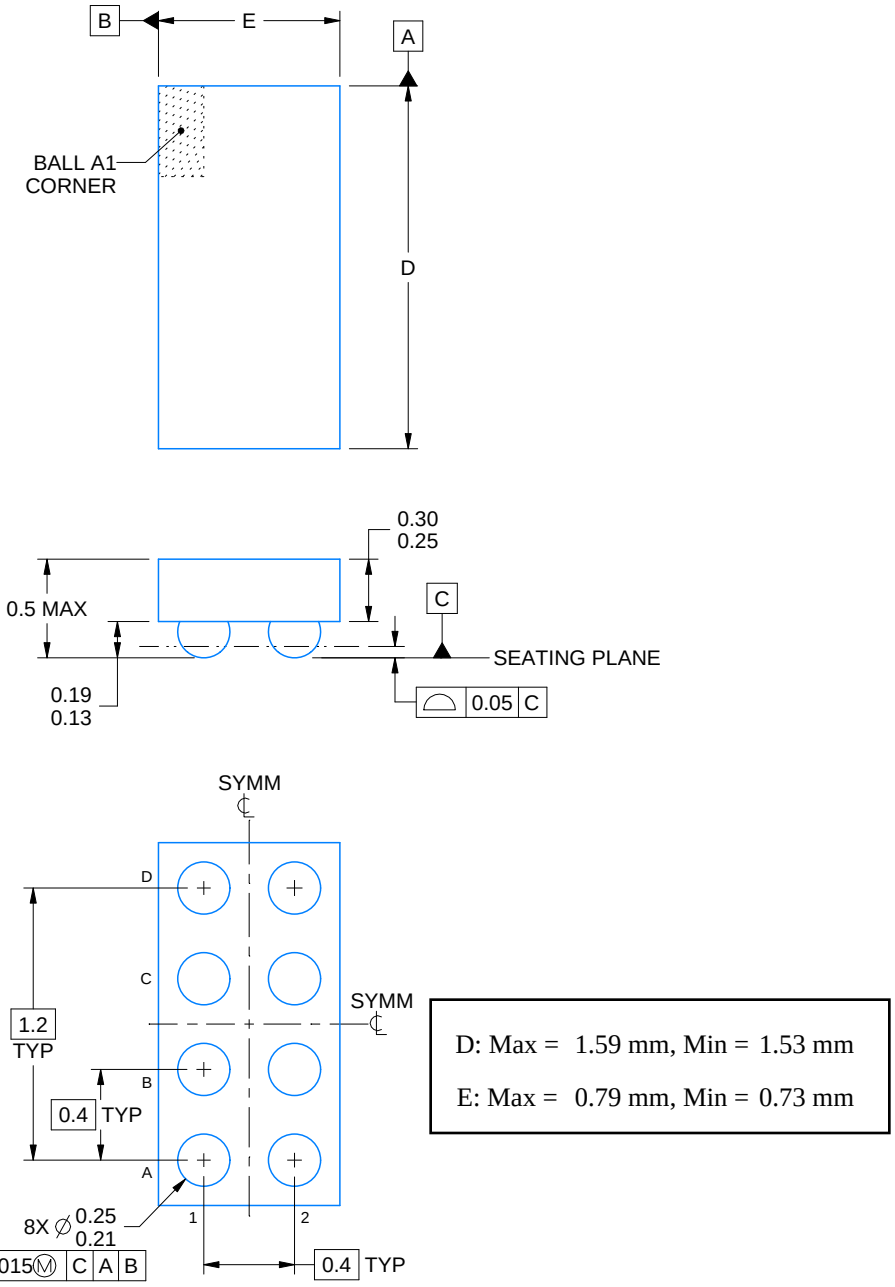

4225242/A 08/2019

NOTES:

1. All linear dimensions are in millimeters. Any dimensions in parenthesis are for reference only. Dimensioning and tolerancing per ASME Y14.5M.
2. This drawing is subject to change without notice.

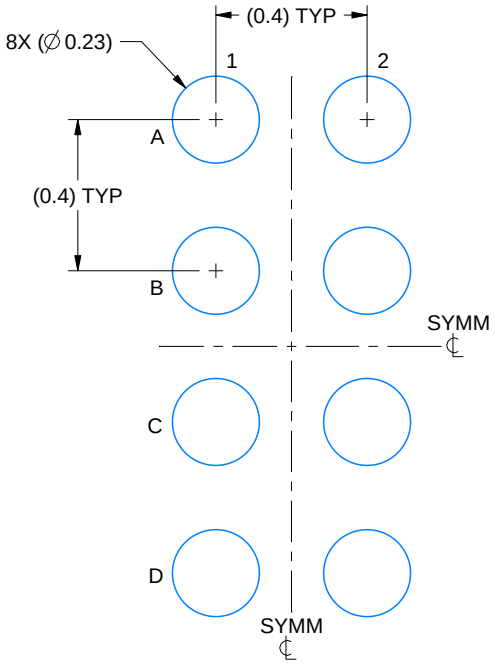

LAND PATTERN EXAMPLE
EXPOSED METAL SHOWN
SCALE: 50X

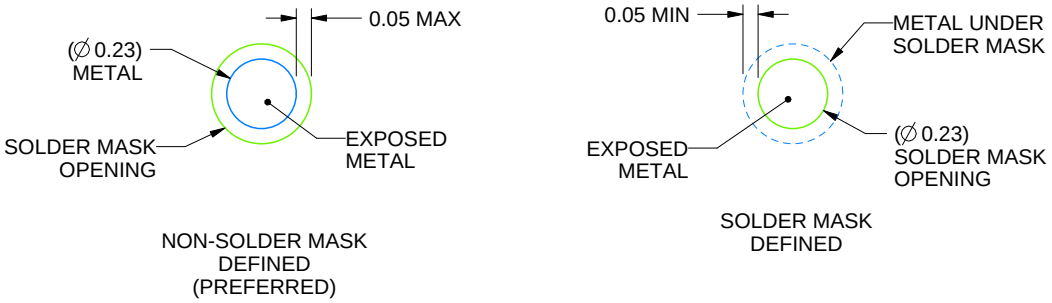

SOLDER MASK DETAILS
NOT TO SCALE

4225242/A 08/2019

NOTES: (continued)

3. Final dimensions may vary due to manufacturing tolerance considerations and also routing constraints.
   See Texas Instruments Literature No. SNVA009 (www.ti.com/lit/snva009).

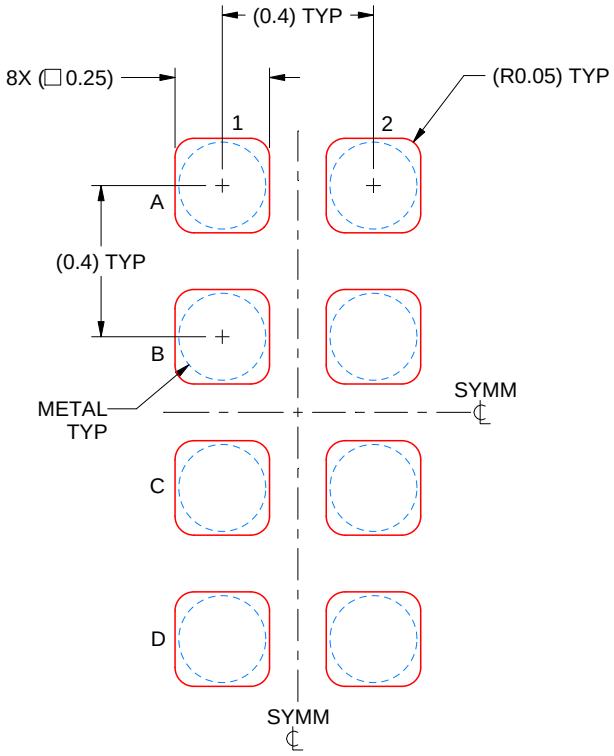

SOLDER PASTE EXAMPLE
BASED ON 0.1 mm THICK STENCIL
SCALE: 50X

4225242/A 08/2019

NOTES: (continued)

4. Laser cutting apertures with trapezoidal walls and rounded corners may offer better paste release.

RSE0008A

PACKAGE OUTLINE

UQFN - 0.6 mm max height

PLASTIC QUAD FLATPACK - NO LEAD

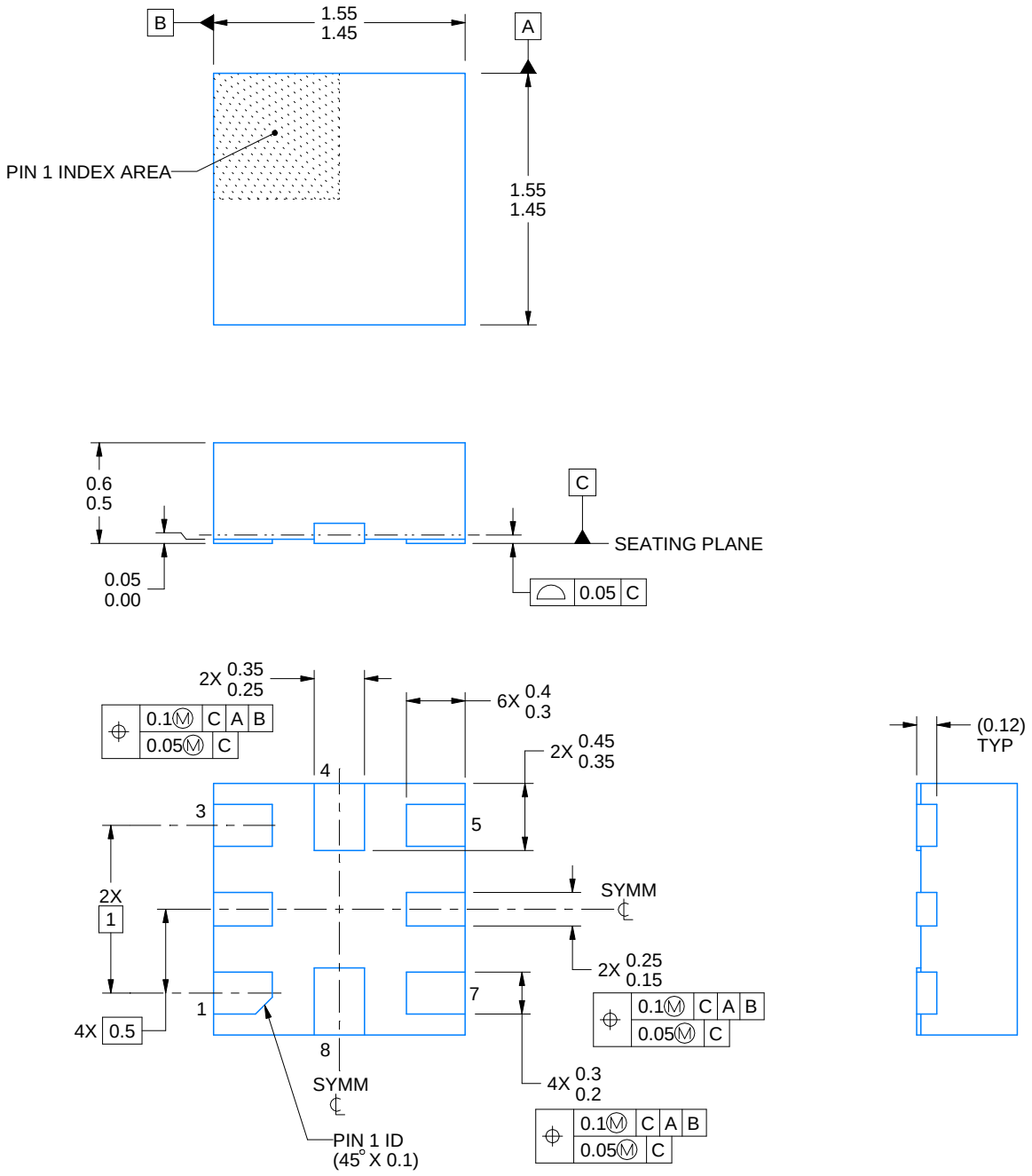

NOTES:

1. All linear dimensions are in millimeters. Any dimensions in parenthesis are for reference only. Dimensioning and tolerancing per ASME Y14.5M.
2. This drawing is subject to change without notice.

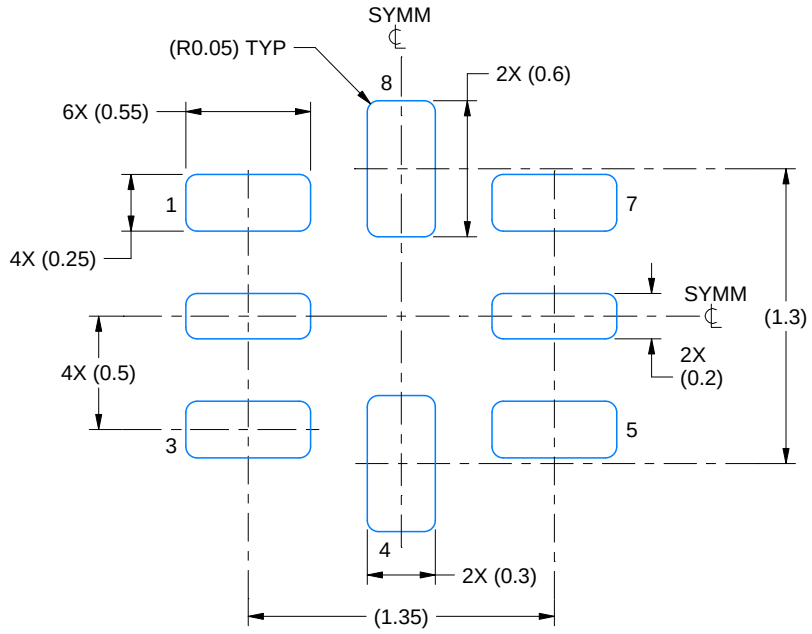

LAND PATTERN EXAMPLE
SCALE:30X

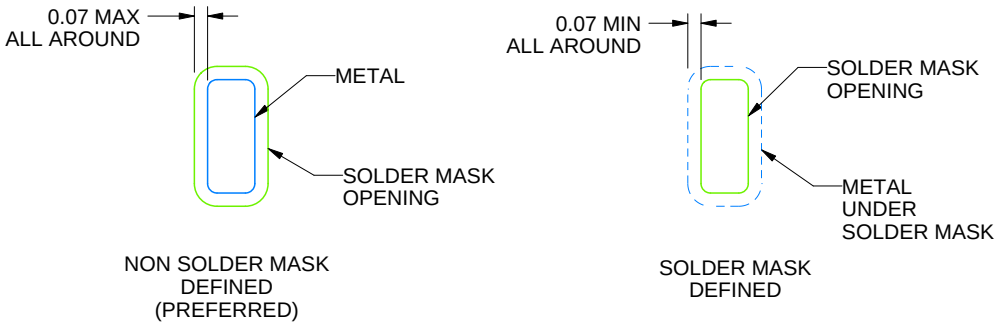

SOLDER MASK DETAILS
NOT TO SCALE

4220323/B 03/2018

NOTES: (continued)

3. For more information, see Texas Instruments literature number SLUA271 (www.ti.com/lit/slua271).

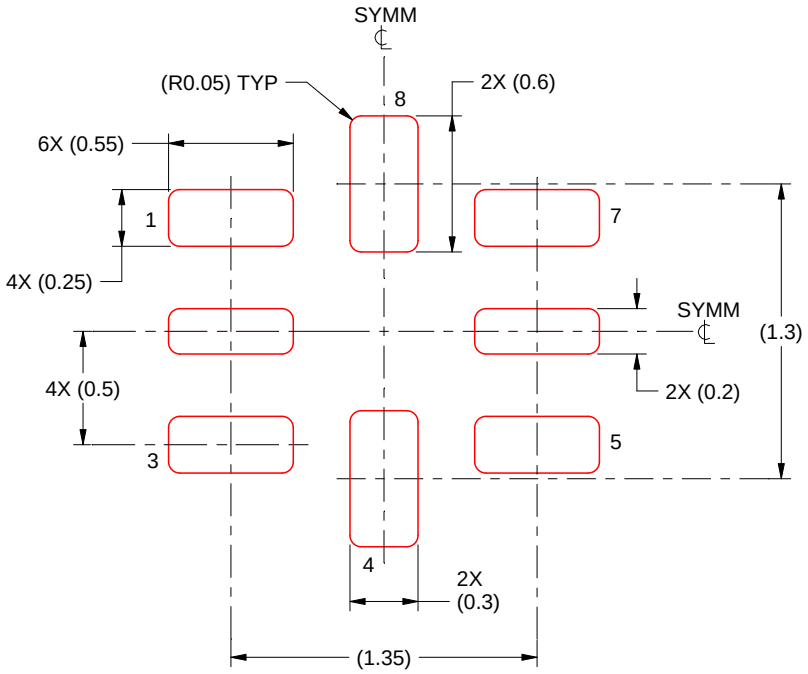

SOLDER PASTE EXAMPLE
BASED ON 0.1 mm THICKNESS
SCALE: 30X

4220323/B 03/2018

NOTES: (continued)

5. Laser cutting apertures with trapezoidal walls and rounded corners may offer better paste release. IPC-7525 may have alternate design recommendations.

IMPORTANT NOTICE AND DISCLAIMER

TI PROVIDES TECHNICAL AND RELIABILITY DATA (INCLUDING DATA SHEETS), DESIGN RESOURCES (INCLUDING REFERENCE DESIGNS), APPLICATION OR OTHER DESIGN ADVICE, WEB TOOLS, SAFETY INFORMATION, AND OTHER RESOURCES “AS IS” AND WITH ALL FAULTS, AND DISCLAIMS ALL WARRANTIES, EXPRESS AND IMPLIED, INCLUDING WITHOUT LIMITATION ANY IMPLIED WARRANTIES OF MERCHANTABILITY, FITNESS FOR A PARTICULAR PURPOSE OR NON-INFRINGEMENT OF THIRD PARTY INTELLECTUAL PROPERTY RIGHTS.

These resources are intended for skilled developers designing with TI products. You are solely responsible for (1) selecting the appropriate TI products for your application, (2) designing, validating and testing your application, and (3) ensuring your application meets applicable standards, and any other safety, security, regulatory or other requirements.

These resources are subject to change without notice. TI grants you permission to use these resources only for development of an application that uses the TI products described in the resource. Other reproduction and display of these resources is prohibited. No license is granted to any other TI intellectual property right or to any third party intellectual property right. TI disclaims responsibility for, and you will fully indemnify TI and its representatives against, any claims, damages, costs, losses, and liabilities arising out of your use of these resources.

TI’s products are provided subject to TI’s Terms of Sale or other applicable terms available either on ti.com or provided in conjunction with such TI products. TI’s provision of these resources does not expand or otherwise alter TI’s applicable warranties or warranty disclaimers for TI products.

TI objects to and rejects any additional or different terms you may have proposed.

Mailing Address: Texas Instruments, Post Office Box 655303, Dallas, Texas 75265
Copyright © 2024, Texas Instruments Incorporated