- **Undershoot Protection for Off-Isolation on A and B Ports Up To −2 V**
- **B-Port Outputs Are Precharged by Bias Voltage (BIASV) to Minimize Signal Distortion During Live Insertion and Hot-Plugging**
- **Supports PCI Hot Plug**
- **Bidirectional Data Flow, With Near-Zero Propagation Delay**
- **Low ON-State Resistance (r_{on}) Characteristics (r_{on} = 3 Ω Typical)**
- **Low Input/Output Capacitance Minimizes Loading and Signal Distortion ($C_{io(OFF)}$ = 5.5 pF Typical)**
- **Data and Control Inputs Provide Undershoot Clamp Diodes**
- **Low Power Consumption (I_{CC} = 3 μA Max)**
- **V_{CC} Operating Range From 4 V to 5.5 V**
- **Data I/Os Support 0 to 5-V Signaling Levels (0.8-V, 1.2-V, 1.5-V, 1.8-V, 2.5-V, 3.3-V, 5-V)**
- **Control Inputs Can be Driven by TTL or 5-V/3.3-V CMOS Outputs**
- **I_{off} Supports Partial-Power-Down Mode Operation**
- **Latch-Up Performance Exceeds 100 mA Per JESD 78, Class II**
- **ESD Performance Tested Per JESD 22**
  - **2000-V Human-Body Model (A114-B, Class II)**
  - **1000-V Charged-Device Model (C101)**
- **Supports Both Digital and Analog Applications: PCI Interface, Memory Interleaving, Bus Isolation, Low-Distortion Signal Gating**

DB, DBQ, DGV, DW, OR PW PACKAGE
(TOP VIEW)

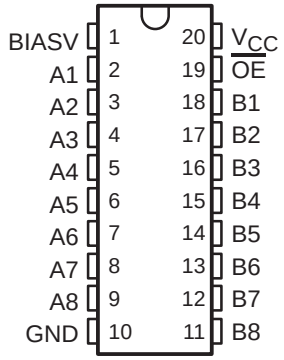

RGY PACKAGE
(TOP VIEW)

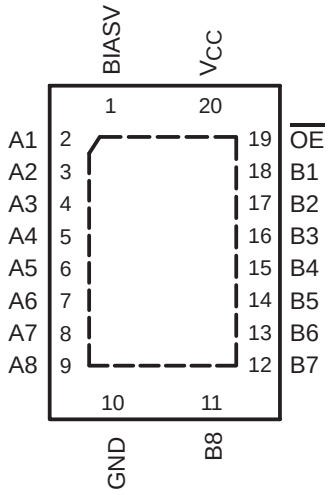

description/ordering information

The SN74CBT6845C is a high-speed TTL-compatible FET bus switch with low ON-state resistance (r_{on}), allowing for minimal propagation delay. Active Undershoot-Protection Circuitry on the A and B ports of the SN74CBT6845C provides protection for undershoot up to −2 V by sensing an undershoot event and ensuring that the switch remains in the proper OFF state. The device also precharges the B port to a user-selectable bias voltage (BIASV) to minimize live-insertion noise.

Please be aware that an important notice concerning availability, standard warranty, and use in critical applications of Texas Instruments semiconductor products and disclaimers thereto appears at the end of this data sheet.

PRODUCTION DATA information is current as of publication date. Products conform to specifications per the terms of Texas Instruments standard warranty. Production processing does not necessarily include testing of all parameters.

Copyright © 2003, Texas Instruments Incorporated

description/ordering information (continued)

The SN74CBT6845C is an 8-bit bus switch with a single output-enable ($\overline{OE}$) input. When $\overline{OE}$ is low, the 8-bit bus switch is ON, and the A port is connected to the B port, allowing bidirectional data flow between ports. When $\overline{OE}$ is high, the 8-bit bus switch is OFF, and a high-impedance state exists between the A and B ports. The B port is precharged to BIASV through the equivalent of a 10-kΩ resistor when $\overline{OE}$ is high, or if the device is powered down (V_{CC} = 0 V).

During insertion (or removal) of a card into (or from) an active bus, the card's output voltage may be close to GND. When the connector pins make contact, the card's parasitic capacitance tries to force the bus signal to GND, creating a possible glitch on the active bus. This glitching effect can be reduced by using a bus switch with precharged bias voltage (BIASV) of the bus switch equal to the input threshold voltage level of the receivers on the active bus. This method will ensure that any glitch produced by insertion (or removal) of the card will not cross the input threshold region of the receivers on the active bus, minimizing the effects of live-insertion noise.

This device is fully specified for partial-power-down applications using I_{off}. The I_{off} feature ensures that damaging current will not backflow through the device when it is powered down. The device has isolation during power off.

To ensure the high-impedance state during power up or power down, $\overline{OE}$ should be tied to V_{CC} through a pullup resistor; the minimum value of the resistor is determined by the current-sinking capability of the driver.

ORDERING INFORMATION

T_A	PACKAGE†		ORDERABLE PART NUMBER	TOP-SIDE MARKING
−40°C to 85°C	QFN − RGY	Tape and reel	SN74CBT6845CRGYR	CT6845C
	SOIC − DW	Tube	SN74CBT6845CDW	CBT6845C
		Tape and reel	SN74CBT6845CDWR	
	SSOP − DB	Tube	SN74CBT6845CDB	CT6845C
		Tape and reel	SN74CBT6845CDBR	
	SSOP (QSOP) − DBQ	Tape and reel	SN74CBT6845CDBQR	CBT6845C
	TSSOP − PW	Tube	SN74CBT6845CPW	CT6845C
		Tape and reel	SN74CBT6845CPWR	
	TVSOP − DGV	Tape and reel	SN74CBT6845CDGVR	CT6845C

† Package drawings, standard packing quantities, thermal data, symbolization, and PCB design guidelines are available at www.ti.com/sc/package.

FUNCTION TABLE

INPUT $\overline{OE}$	INPUT/OUTPUT A	FUNCTION
L	B	A port = B port
H	Z	Disconnect B port = BIASV

logic diagram (positive logic)

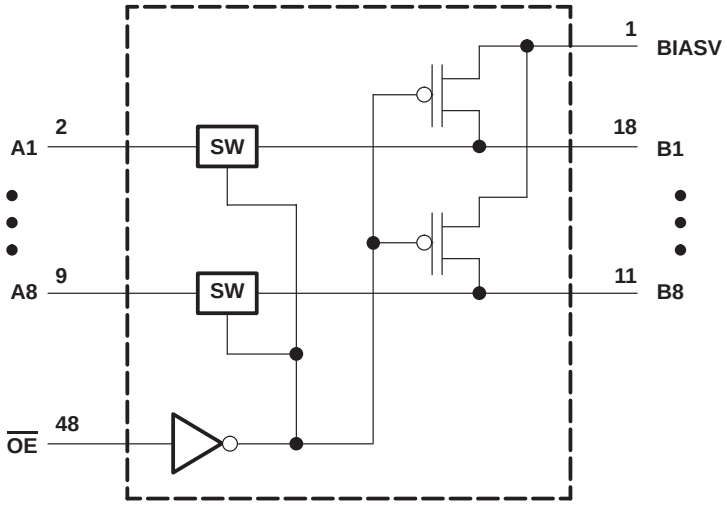

simplified schematic, each FET switch (SW)

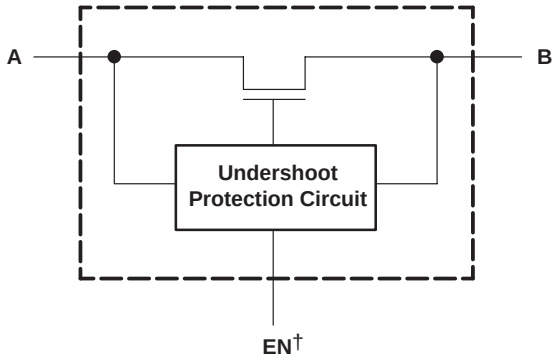

† EN is the internal enable signal applied to the switch.

absolute maximum ratings over operating free-air temperature range (unless otherwise noted)†

Supply voltage range, V_{CC} . . . . . −0.5 V to 7 V
Bias supply voltage range, BIASV . . . . . −0.5 V to 7 V
Control input voltage range, V_{IN} (see Notes 1 and 2) . . . . . −0.5 V to 7 V
Switch I/O voltage range, $V_{I/O}$ (see Notes 1, 2, and 3) . . . . . −0.5 V to 7 V
Control input clamp current, I_{IK} (V_{IN} < 0) . . . . . −50 mA
I/O port clamp current, $I_{I/OK}$ ($V_{I/O}$ < 0) . . . . . −50 mA
ON-state switch current, $I_{I/O}$ (see Note 4) . . . . . ±128 mA
Continuous current through V_{CC} or GND terminals . . . . . ±100 mA
Package thermal impedance, θ_{JA} (see Note 5): DB package . . . . . 70°C/W
(see Note 5): DBQ package . . . . . 68°C/W
(see Note 5): DGV package . . . . . 92°C/W
(see Note 5): DW package . . . . . 58°C/W
(see Note 5): PW package . . . . . 83°C/W
(see Note 6): RGY package . . . . . 37°C/W
Storage temperature range, T_{stg} . . . . . −65°C to 150°C

† Stresses beyond those listed under “absolute maximum ratings” may cause permanent damage to the device. These are stress ratings only, and functional operation of the device at these or any other conditions beyond those indicated under “recommended operating conditions” is not implied. Exposure to absolute-maximum-rated conditions for extended periods may affect device reliability.

NOTES: 1. All voltages are with respect to ground unless otherwise specified.
2. The input and output voltage ratings may be exceeded if the input and output clamp-current ratings are observed.
3. V_I and V_O are used to denote specific conditions for $V_{I/O}$.
4. I_I and I_O are used to denote specific conditions for $I_{I/O}$.
5. The package thermal impedance is calculated in accordance with JESD 51-7.
6. The package thermal impedance is calculated in accordance with JESD 51-5.

recommended operating conditions (see Note 7)

		MIN	MAX	UNIT
V_{CC}	Supply voltage	4	5.5	V
BIASV	Bias supply voltage	0	V_{CC}	V
V_{IH}	High-level control input voltage	2	5.5	V
V_{IL}	Low-level control input voltage	0	0.8	V
$V_{I/O}$	Data input/output voltage	0	5.5	V
T_A	Operating free-air temperature	−40	85	°C

NOTE 7: All unused control inputs of the device must be held at V_{CC} or GND to ensure proper device operation. Refer to the TI application report, *Implications of Slow or Floating CMOS Inputs*, literature number SCBA004. BIASV is a supply voltage, not a control input.

electrical characteristics over recommended operating free-air temperature range (unless otherwise noted)

PARAMETER		TEST CONDITIONS			MIN	TYP†	MAX	UNIT
V_{IK}	Control inputs	V_{CC} = 4.5 V,	I_{IN} = −18 mA				−1.8	V
V_{IKU}	Data inputs	V_{CC} = 5 V,	0 mA > I_I ≥ −50 mA, V_{IN} = V_{CC} or GND,	Switch OFF			−2	V
$V_{O(USP)}$‡		V_{CC} = BIASV = 5 V,	I_I = −10 mA, V_{IN} = V_{CC} or GND,	Switch OFF	3			V
V_O	B port	V_{CC} = 0 V,	BIASV = V_X,	I_O = 0	V_X −0.1		V_X	V
I_{IN}	Control inputs	V_{CC} = 5.5 V,	V_{IN} = V_{CC} or GND				±1	µA
I_O	B port	V_{CC} = 4.5 V,	BIASV = 2.4 V, V_O = 0,	Switch OFF, V_{IN} = V_{CC} or GND		0.25		mA
I_{OZ}§		V_{CC} = 5.5 V,	V_O = 0 to 5.5 V, V_I = 0,	Switch OFF, V_{IN} = V_{CC} or GND			±10	µA
I_{off}		V_{CC} = 0,	V_O = 0 to 5.5 V,	V_I = 0			10	µA
I_{CC}		V_{CC} = 5.5 V,	$I_{I/O}$ = 0, V_{IN} = V_{CC} or GND,	Switch ON or OFF			3	µA
ΔI_{CC}¶	Control inputs	V_{CC} = 5.5 V,	One input at 3.4 V,	Other inputs at V_{CC} or GND			2.5	mA
C_{in}	Control inputs	V_{IN} = 3 V or 0				4		pF
$C_{io(OFF)}$	A port	$V_{I/O}$ = 3 V or 0,	Switch OFF,	V_{IN} = V_{CC} or GND		5.5		pF
$C_{io(ON)}$		$V_{I/O}$ = 3 V or 0,	Switch ON,	V_{IN} = V_{CC} or GND		13.5		pF
r_{on}#		V_{CC} = 4 V, TYP at V_{CC} = 4 V	V_I = 2.4 V,	I_O = −15 mA		8	12	Ω
		V_{CC} = 4.5 V	V_I = 0	I_O = 64 mA		3	6	Ω
				I_O = 30 mA		3	6	Ω
			V_I = 2.4 V,	I_O = −15 mA		5	10	Ω

V_{IN} and I_{IN} refer to control inputs. V_I, V_O, I_I, and I_O refer to data pins.
† All typical values are at V_{CC} = 5 V (unless otherwise noted), T_A = 25°C.
‡ $V_{O(USP)}$ = A-port undershoot static protection.
§ For I/O ports, the parameter I_{OZ} includes the input leakage current.
¶ This is the increase in supply current for each input that is at the specified voltage level, rather than V_{CC} or GND.
# Measured by the voltage drop between the A and B terminals at the indicated current through the switch. ON-state resistance is determined by the lower of the voltages of the two (A or B) terminals.

switching characteristics over recommended operating free-air temperature range (unless otherwise noted) (see Figure 1)

PARAMETER	TEST CONDITIONS	FROM (INPUT)	TO (OUTPUT)	V_{CC} = 4 V		V_{CC} = 5 V ± 0.5 V		UNIT
				MIN	MAX	MIN	MAX	
t_{pd}‖		A or B	B or A		0.24		0.15	ns
t_{PZH}	BIASV = GND	$\overline{OE}$	A or B		5.2	1.5	4.8	ns
t_{PZL}	BIASV = 3 V				5.2	1.5	4.8	
t_{PHZ}	BIASV = GND	$\overline{OE}$	A or B		4.9	1.5	5.3	ns
t_{PLZ}	BIASV = 3 V				4.9	1.5	5.3	

‖ The propagation delay is the calculated RC time constant of the typical ON-state resistance of the switch and the specified load capacitance, when driven by an ideal voltage source (zero output impedance).

PARAMETER MEASUREMENT INFORMATION

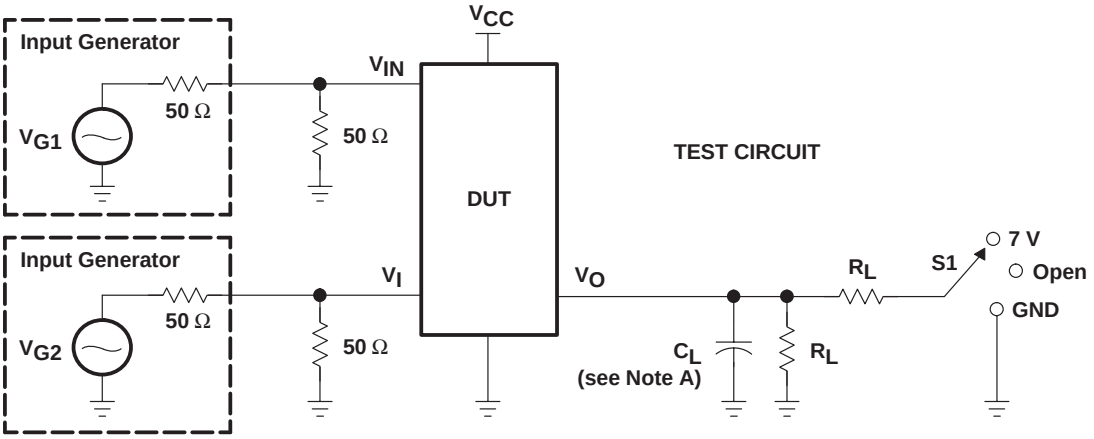

TEST	V_{CC}	S1	R_L	V_I	C_L	V_Δ
$t_{pd(s)}$	5 V ± 0.5 V	Open	500 Ω	V_{CC} or GND	50 pF	
	4 V	Open	500 Ω	V_{CC} or GND	50 pF	
t_{PLZ}/t_{PZL}	5 V ± 0.5 V	7 V	500 Ω	GND	50 pF	0.3 V
	4 V	7 V	500 Ω	GND	50 pF	0.3 V
t_{PHZ}/t_{PZH}	5 V ± 0.5 V	Open	500 Ω	V_{CC}	50 pF	0.3 V
	4 V	Open	500 Ω	V_{CC}	50 pF	0.3 V

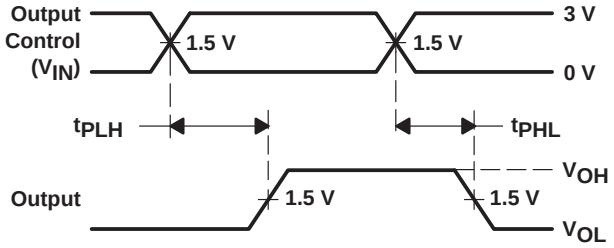

VOLTAGE WAVEFORMS
PROPAGATION DELAY TIMES ($t_{pd(s)}$)

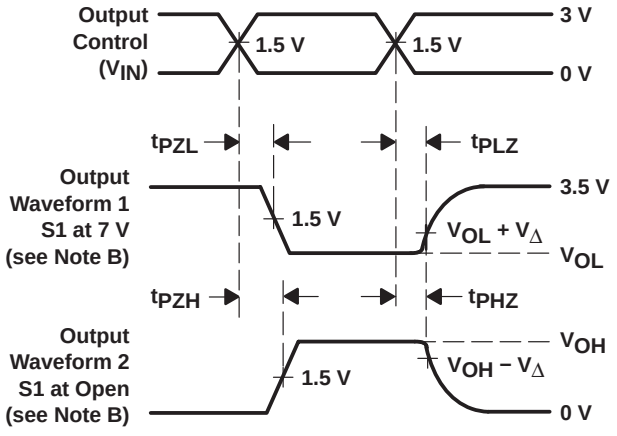

VOLTAGE WAVEFORMS
ENABLE AND DISABLE TIMES

NOTES: A. C_L includes probe and jig capacitance.
B. Waveform 1 is for an output with internal conditions such that the output is low except when disabled by the output control. Waveform 2 is for an output with internal conditions such that the output is high except when disabled by the output control.
C. All input pulses are supplied by generators having the following characteristics: PRR ≤ 10 MHz, Z_O = 50 Ω, t_r ≤ 2.5 ns, t_f ≤ 2.5 ns.
D. The outputs are measured one at a time with one transition per measurement.
E. t_{PLZ} and t_{PHZ} are the same as t_{dis}.
F. t_{PZL} and t_{PZH} are the same as t_{en}.
G. t_{PLH} and t_{PHL} are the same as $t_{pd(s)}$. The tpd propagation delay is the calculated RC time constant of the typical ON-state resistance of the switch and the specified load capacitance, when driven by an ideal voltage source (zero output impedance).
H. All parameters and waveforms are not applicable to all devices.

Figure 1. Test Circuit and Voltage Waveforms

PACKAGING INFORMATION

Orderable part number	Status (1)	Material type (2)	Package | Pins	Package qty | Carrier	RoHS (3)	Lead finish/ Ball material (4)	MSL rating/ Peak reflow (5)	Op temp (°C)	Part marking (6)
SN74CBT6845CPW	Active	Production	TSSOP (PW) | 20	70 | TUBE	Yes	NIPDAU	Level-1-260C-UNLIM	-40 to 85	CT6845C
SN74CBT6845CPW.B	Active	Production	TSSOP (PW) | 20	70 | TUBE	Yes	NIPDAU	Level-1-260C-UNLIM	-40 to 85	CT6845C
SN74CBT6845CPWR	Active	Production	TSSOP (PW) | 20	2000 | LARGE T&R	Yes	NIPDAU	Level-1-260C-UNLIM	-40 to 85	CT6845C
SN74CBT6845CPWR.B	Active	Production	TSSOP (PW) | 20	2000 | LARGE T&R	Yes	NIPDAU	Level-1-260C-UNLIM	-40 to 85	CT6845C
SN74CBT6845CRGYR	Active	Production	VQFN (RGY) | 20	3000 | LARGE T&R	Yes	NIPDAU	Level-2-260C-1 YEAR	-40 to 85	CT6845C
SN74CBT6845CRGYR.B	Active	Production	VQFN (RGY) | 20	3000 | LARGE T&R	Yes	NIPDAU	Level-2-260C-1 YEAR	-40 to 85	CT6845C

(1) **Status:** For more details on status, see our product life cycle.

(2) **Material type:** When designated, preproduction parts are prototypes/experimental devices, and are not yet approved or released for full production. Testing and final process, including without limitation quality assurance, reliability performance testing, and/or process qualification, may not yet be complete, and this item is subject to further changes or possible discontinuation. If available for ordering, purchases will be subject to an additional waiver at checkout, and are intended for early internal evaluation purposes only. These items are sold without warranties of any kind.

(3) **RoHS values:** Yes, No, RoHS Exempt. See the TI RoHS Statement for additional information and value definition.

(4) **Lead finish/Ball material:** Parts may have multiple material finish options. Finish options are separated by a vertical ruled line. Lead finish/Ball material values may wrap to two lines if the finish value exceeds the maximum column width.

(5) **MSL rating/Peak reflow:** The moisture sensitivity level ratings and peak solder (reflow) temperatures. In the event that a part has multiple moisture sensitivity ratings, only the lowest level per JEDEC standards is shown. Refer to the shipping label for the actual reflow temperature that will be used to mount the part to the printed circuit board.

(6) **Part marking:** There may be an additional marking, which relates to the logo, the lot trace code information, or the environmental category of the part.

Multiple part markings will be inside parentheses. Only one part marking contained in parentheses and separated by a "~" will appear on a part. If a line is indented then it is a continuation of the previous line and the two combined represent the entire part marking for that device.

Important Information and Disclaimer: The information provided on this page represents TI's knowledge and belief as of the date that it is provided. TI bases its knowledge and belief on information provided by third parties, and makes no representation or warranty as to the accuracy of such information. Efforts are underway to better integrate information from third parties. TI has taken and continues to take reasonable steps to provide representative and accurate information but may not have conducted destructive testing or chemical analysis on incoming materials and chemicals. TI and TI suppliers consider certain information to be proprietary, and thus CAS numbers and other limited information may not be available for release.

In no event shall TI's liability arising out of such information exceed the total purchase price of the TI part(s) at issue in this document sold by TI to Customer on an annual basis.

TAPE AND REEL INFORMATION

REEL DIMENSIONS

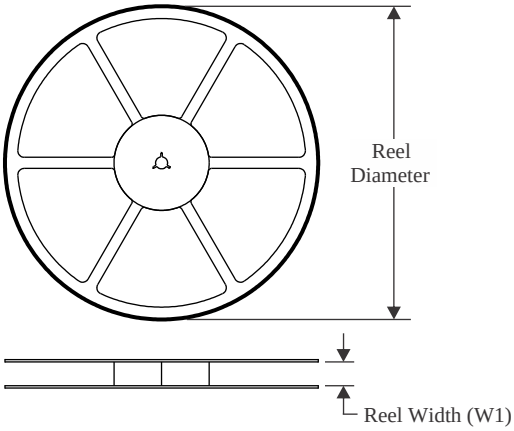

TAPE DIMENSIONS

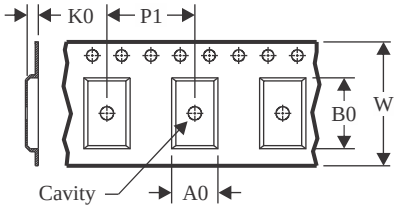

A0	Dimension designed to accommodate the component width
B0	Dimension designed to accommodate the component length
K0	Dimension designed to accommodate the component thickness
W	Overall width of the carrier tape
P1	Pitch between successive cavity centers

QUADRANT ASSIGNMENTS FOR PIN 1 ORIENTATION IN TAPE

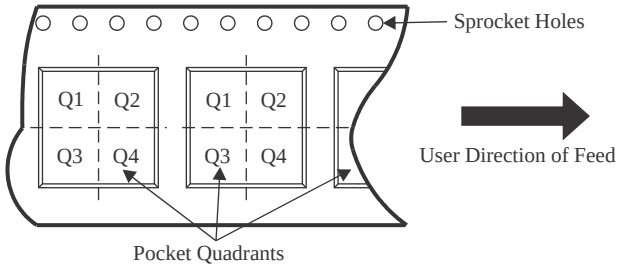

*All dimensions are nominal

Device	Package Type	Package Drawing	Pins	SPQ	Reel Diameter (mm)	Reel Width W1 (mm)	A0 (mm)	B0 (mm)	K0 (mm)	P1 (mm)	W (mm)	Pin1 Quadrant
SN74CBT6845CPWR	TSSOP	PW	20	2000	330.0	16.4	6.95	7.0	1.4	8.0	16.0	Q1
SN74CBT6845CRGYR	VQFN	RGY	20	3000	330.0	12.4	3.71	4.71	1.1	8.0	12.0	Q1

TAPE AND REEL BOX DIMENSIONS

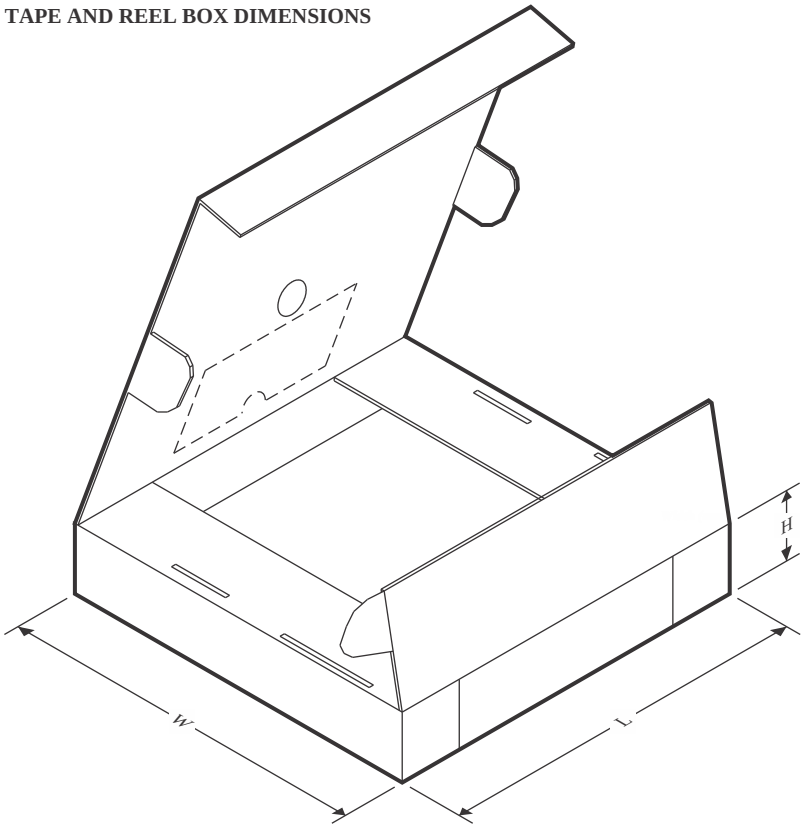

*All dimensions are nominal

Device	Package Type	Package Drawing	Pins	SPQ	Length (mm)	Width (mm)	Height (mm)
SN74CBT6845CPWR	TSSOP	PW	20	2000	353.0	353.0	32.0
SN74CBT6845CRGYR	VQFN	RGY	20	3000	353.0	353.0	32.0

TUBE

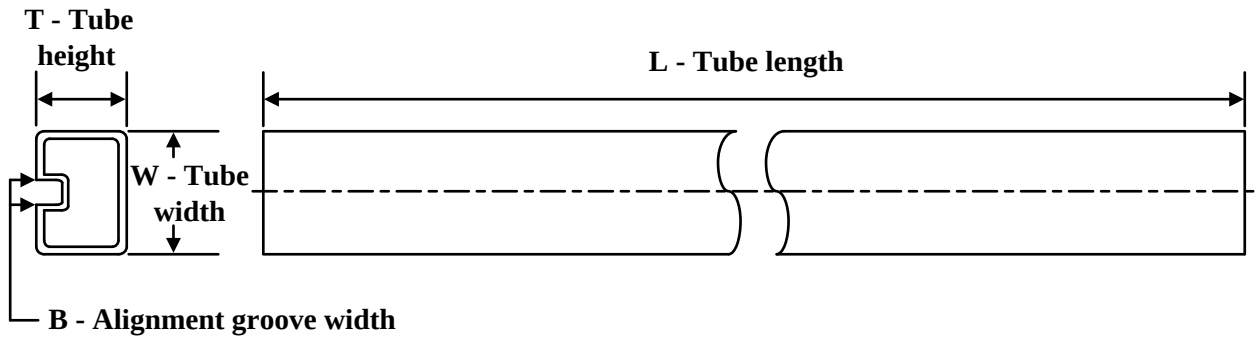

*All dimensions are nominal

Device	Package Name	Package Type	Pins	SPQ	L (mm)	W (mm)	T (µm)	B (mm)
SN74CBT6845CPW	PW	TSSOP	20	70	530	10.2	3600	3.5
SN74CBT6845CPW.B	PW	TSSOP	20	70	530	10.2	3600	3.5

PACKAGE OUTLINE

PW0020A

TSSOP - 1.2 mm max height

SMALL OUTLINE PACKAGE

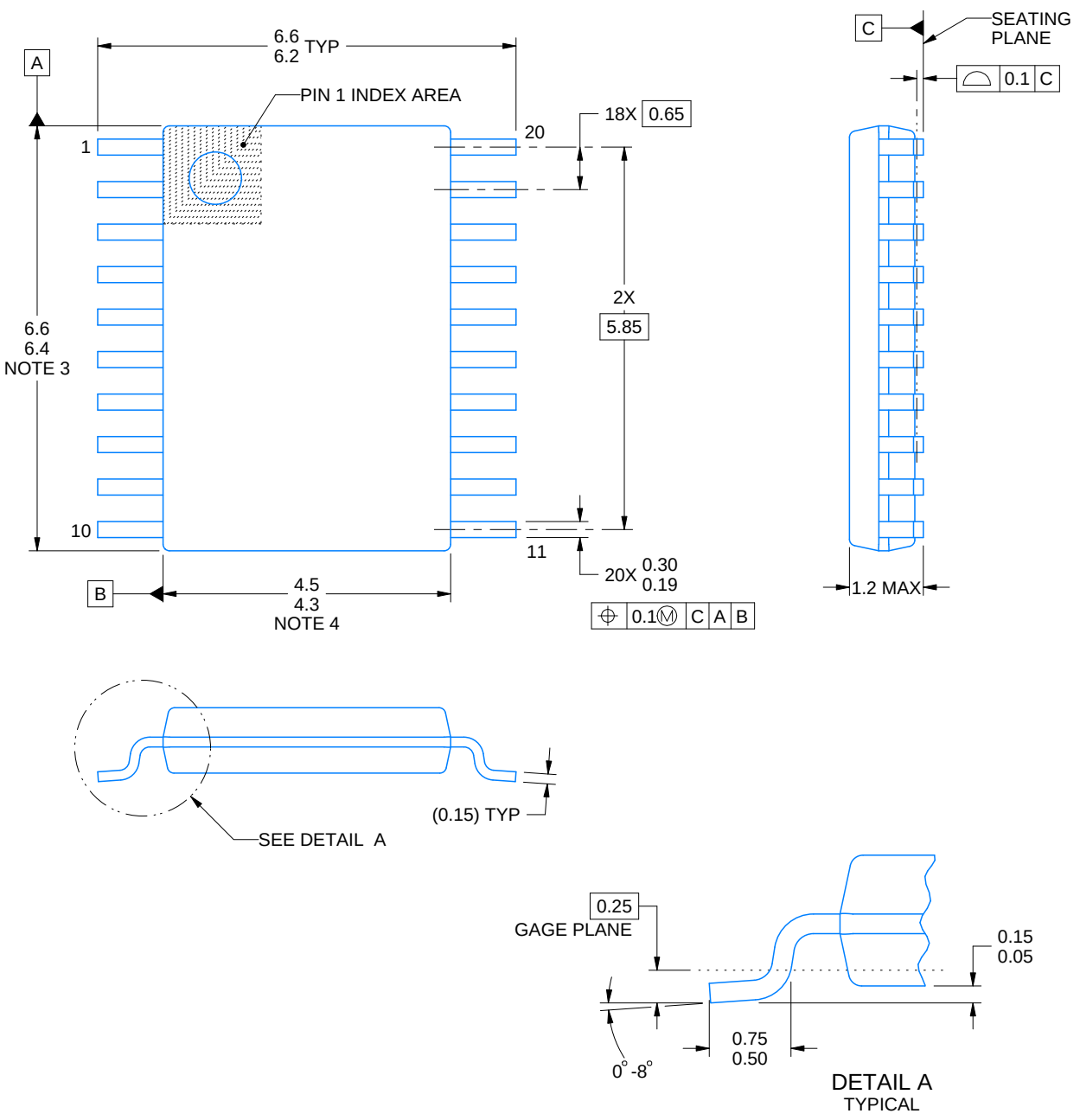

NOTES:

1. All linear dimensions are in millimeters. Any dimensions in parenthesis are for reference only. Dimensioning and tolerancing per ASME Y14.5M.
2. This drawing is subject to change without notice.
3. This dimension does not include mold flash, protrusions, or gate burrs. Mold flash, protrusions, or gate burrs shall not exceed 0.15 mm per side.
4. This dimension does not include interlead flash. Interlead flash shall not exceed 0.25 mm per side.
5. Reference JEDEC registration MO-153.

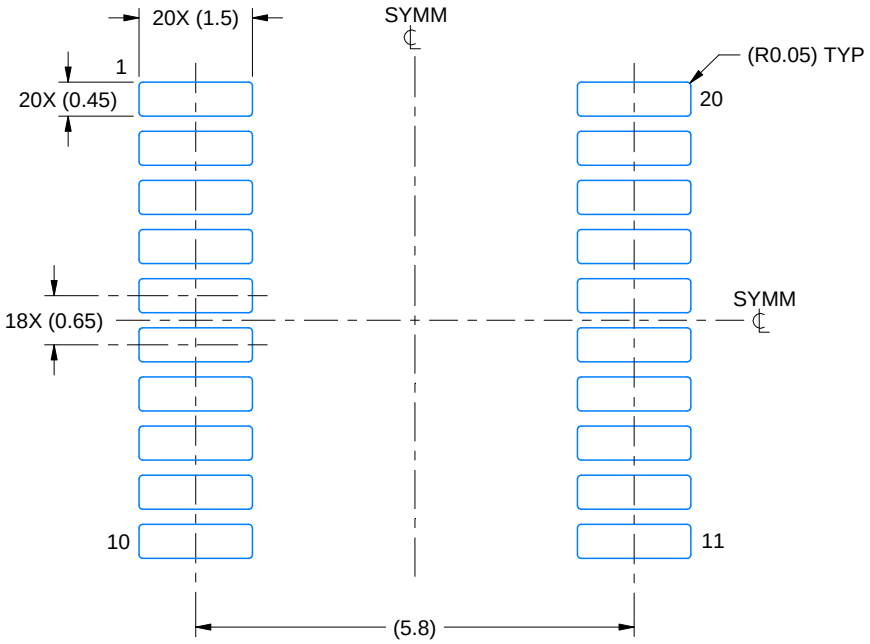

LAND PATTERN EXAMPLE
EXPOSED METAL SHOWN
SCALE: 10X



SOLDER MASK DETAILS

4220206/A 02/2017

NOTES: (continued)

6. Publication IPC-7351 may have alternate designs.
7. Solder mask tolerances between and around signal pads can vary based on board fabrication site.

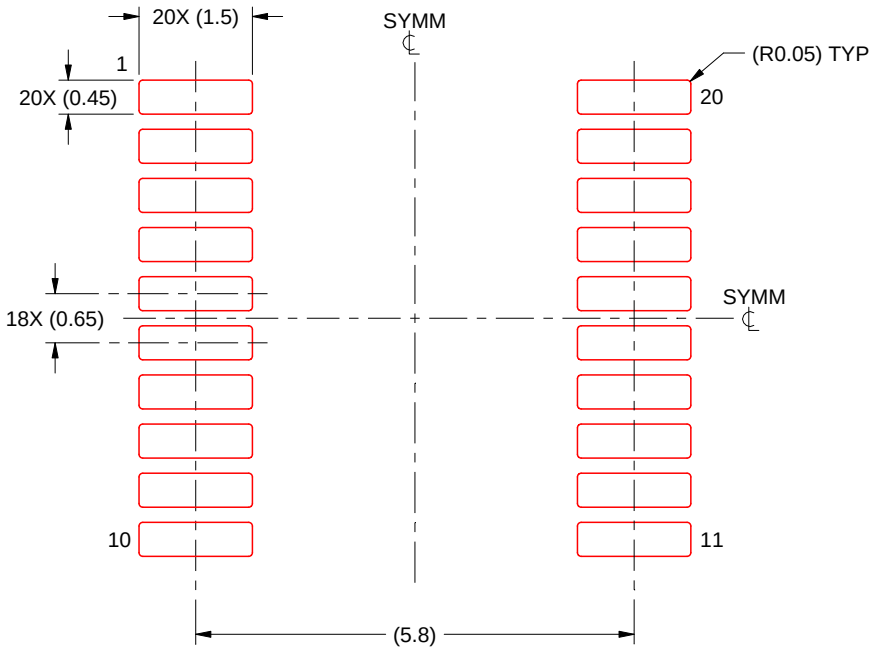

SOLDER PASTE EXAMPLE
BASED ON 0.125 mm THICK STENCIL
SCALE: 10X

4220206/A 02/2017

NOTES: (continued)

8. Laser cutting apertures with trapezoidal walls and rounded corners may offer better paste release. IPC-7525 may have alternate design recommendations.
9. Board assembly site may have different recommendations for stencil design.

GENERIC PACKAGE VIEW

RGY 20

VQFN - 1 mm max height

3.5 x 4.5, 0.5 mm pitch

PLASTIC QUAD FGLATPACK - NO LEAD

This image is a representation of the package family, actual package may vary.
Refer to the product data sheet for package details.

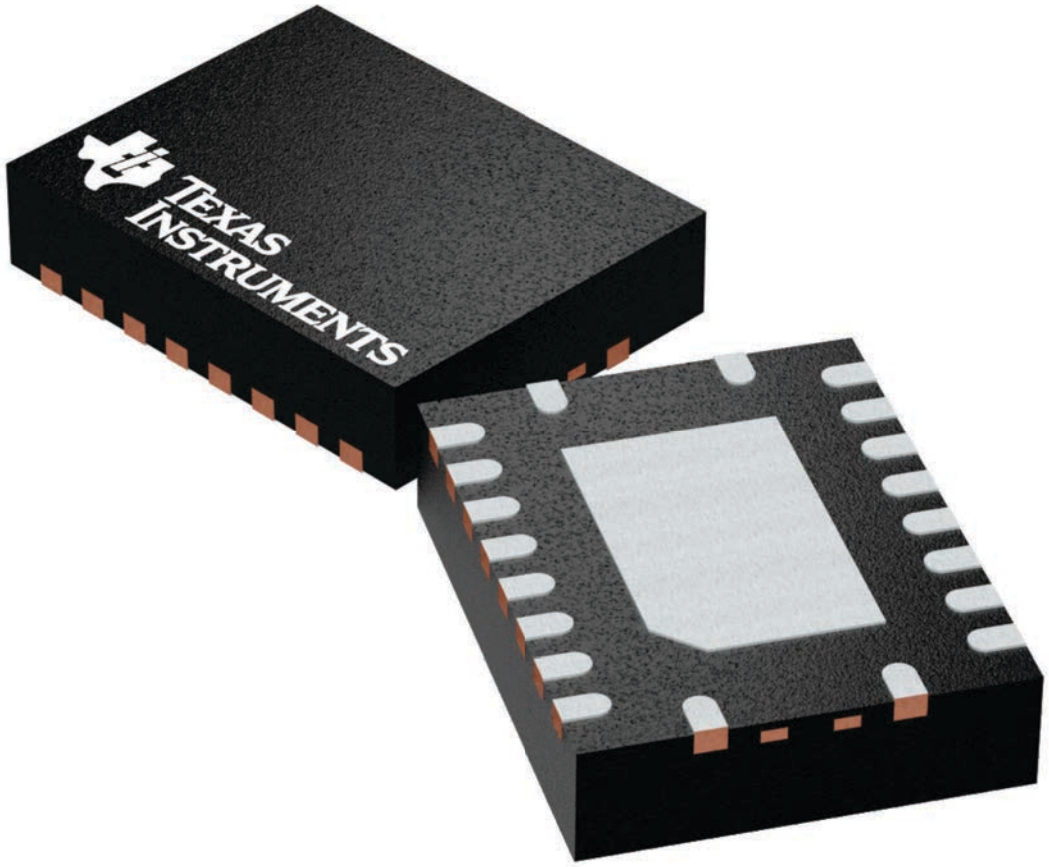

4225264/A

PACKAGE OUTLINE

RGY0020A

VQFN - 1 mm max height

PLASTIC QUAD FLATPACK - NO LEAD

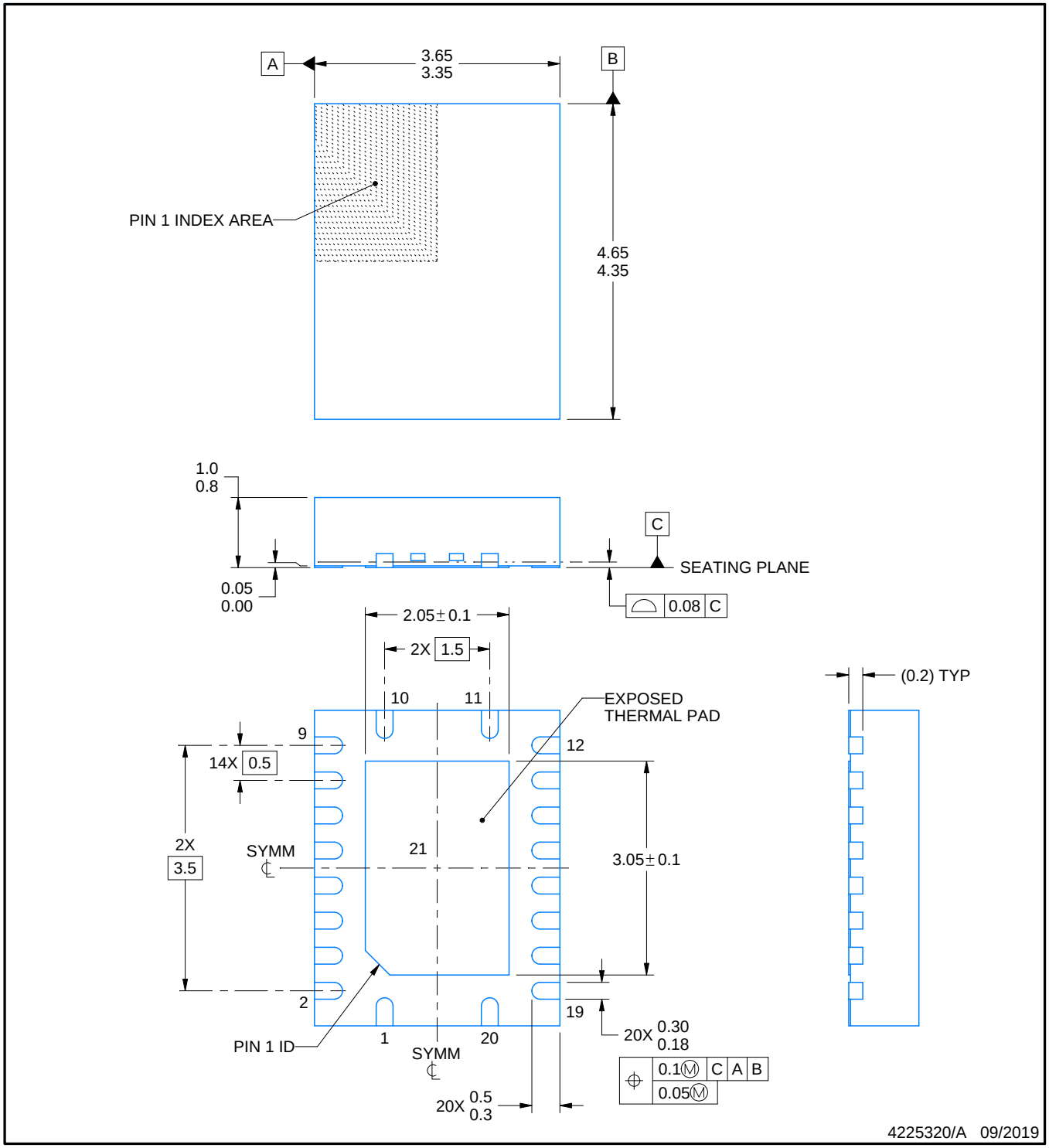

NOTES:

1. All linear dimensions are in millimeters. Any dimensions in parenthesis are for reference only. Dimensioning and tolerancing per ASME Y14.5M.
2. This drawing is subject to change without notice.
3. The package thermal pad must be soldered to the printed circuit board for thermal and mechanical performance.

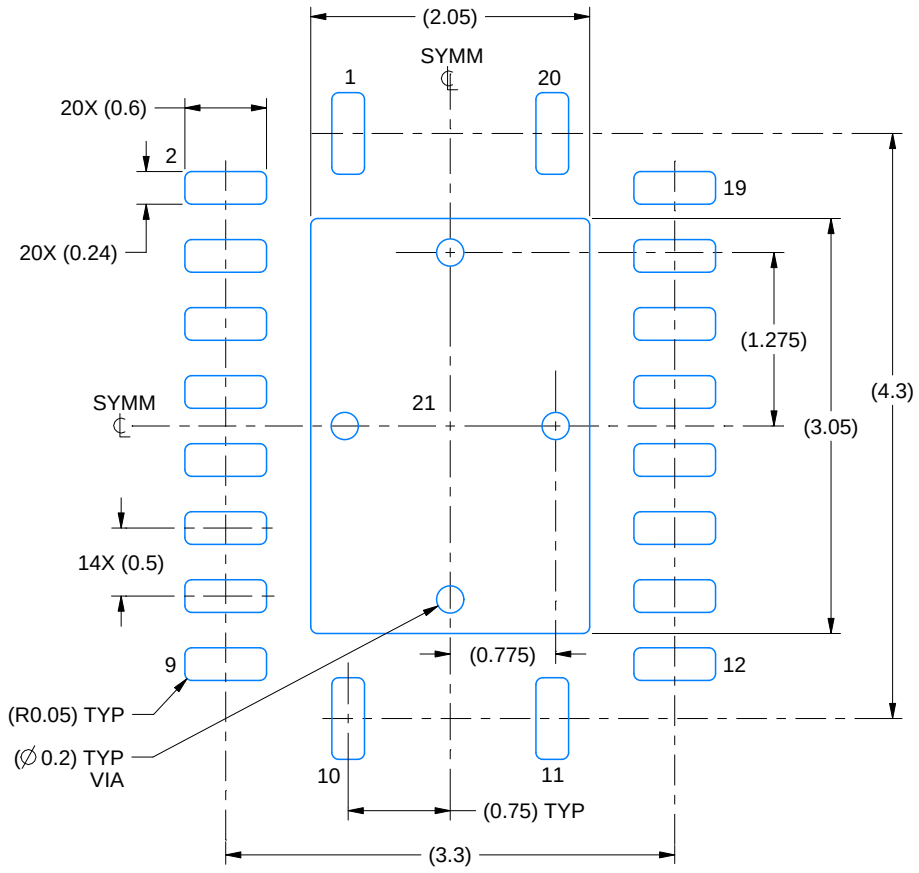

LAND PATTERN EXAMPLE
EXPOSED METAL SHOWN
SCALE:18X

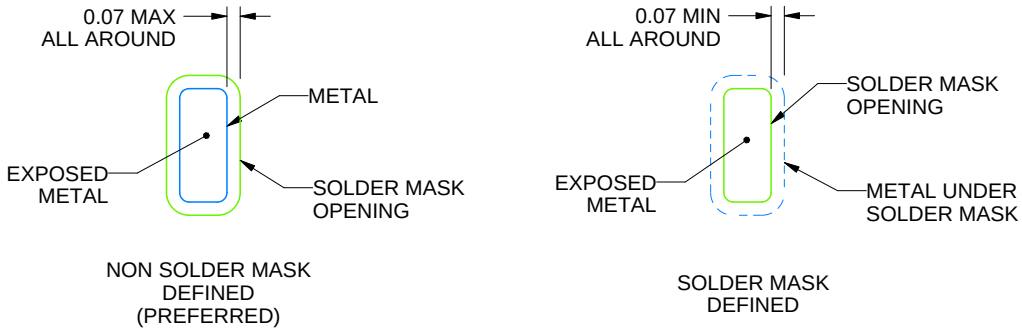

SOLDER MASK DETAILS

4225320/A 09/2019

NOTES: (continued)

4. This package is designed to be soldered to a thermal pad on the board. For more information, see Texas Instruments literature number SLUA271 (www.ti.com/lit/slua271).
5. Vias are optional depending on application, refer to device data sheet. If any vias are implemented, refer to their locations shown on this view. It is recommended that vias under paste be filled, plugged or tented.

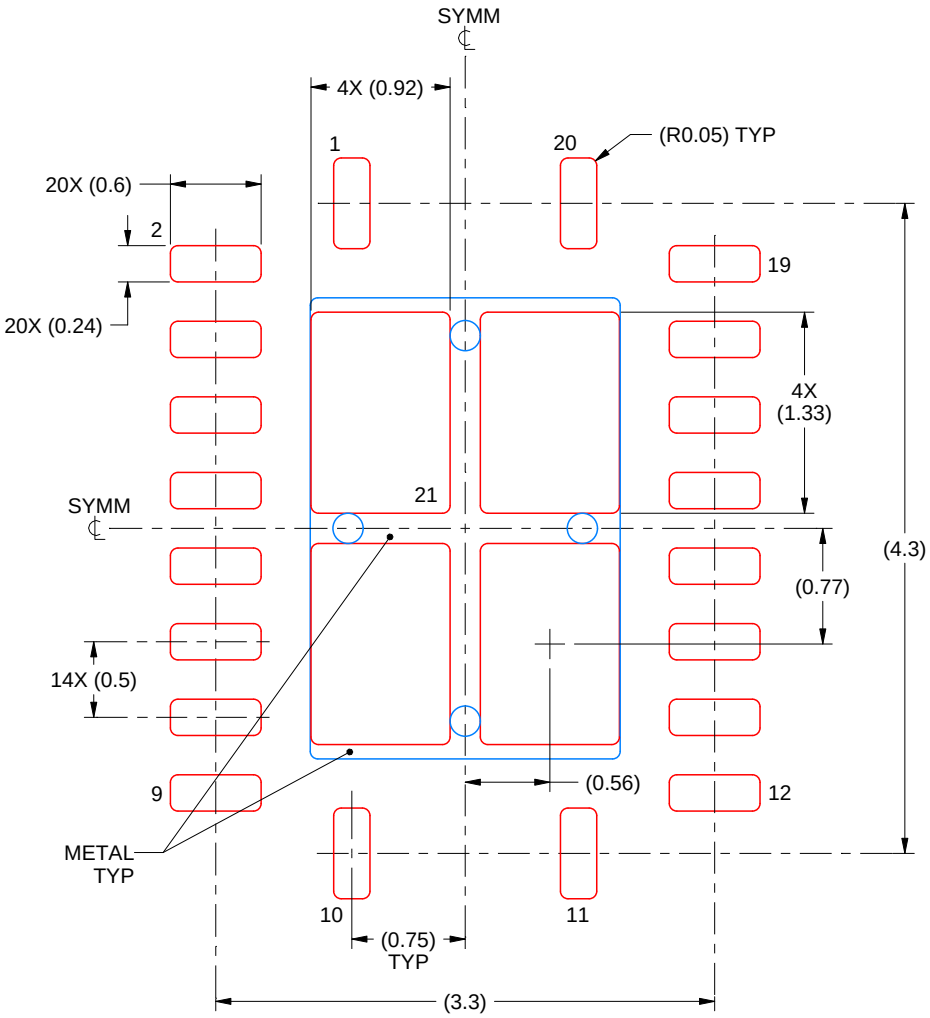

SOLDER PASTE EXAMPLE
BASED ON 0.125 mm THICK STENCIL

EXPOSED PAD 21
78% PRINTED SOLDER COVERAGE BY AREA UNDER PACKAGE
SCALE:20X

4225320/A 09/2019

NOTES: (continued)

6. Laser cutting apertures with trapezoidal walls and rounded corners may offer better paste release. IPC-7525 may have alternate design recommendations.

IMPORTANT NOTICE AND DISCLAIMER

TI PROVIDES TECHNICAL AND RELIABILITY DATA (INCLUDING DATA SHEETS), DESIGN RESOURCES (INCLUDING REFERENCE DESIGNS), APPLICATION OR OTHER DESIGN ADVICE, WEB TOOLS, SAFETY INFORMATION, AND OTHER RESOURCES “AS IS” AND WITH ALL FAULTS, AND DISCLAIMS ALL WARRANTIES, EXPRESS AND IMPLIED, INCLUDING WITHOUT LIMITATION ANY IMPLIED WARRANTIES OF MERCHANTABILITY, FITNESS FOR A PARTICULAR PURPOSE OR NON-INFRINGEMENT OF THIRD PARTY INTELLECTUAL PROPERTY RIGHTS.

These resources are intended for skilled developers designing with TI products. You are solely responsible for (1) selecting the appropriate TI products for your application, (2) designing, validating and testing your application, and (3) ensuring your application meets applicable standards, and any other safety, security, regulatory or other requirements.

These resources are subject to change without notice. TI grants you permission to use these resources only for development of an application that uses the TI products described in the resource. Other reproduction and display of these resources is prohibited. No license is granted to any other TI intellectual property right or to any third party intellectual property right. TI disclaims responsibility for, and you will fully indemnify TI and its representatives against, any claims, damages, costs, losses, and liabilities arising out of your use of these resources.

TI’s products are provided subject to TI’s Terms of Sale or other applicable terms available either on ti.com or provided in conjunction with such TI products. TI’s provision of these resources does not expand or otherwise alter TI’s applicable warranties or warranty disclaimers for TI products.

TI objects to and rejects any additional or different terms you may have proposed.

Mailing Address: Texas Instruments, Post Office Box 655303, Dallas, Texas 75265
Copyright © 2025, Texas Instruments Incorporated