- **21:3 Data Channel Compression at up to 196 Million Bytes per Second Throughput**
- **Suited for SVGA, XGA, or SXGA Data Transmission From Controller to Display With Very Low EMI**
- **21 Data Channels Plus Clock In Low-Voltage TTL Inputs and 3 Data Channels Plus Clock Out Low-Voltage Differential Signaling (LVDS) Outputs**
- **Operates From a Single 3.3-V Supply and 89 mW (Typ)**
- **Ultralow-Power 3.3-V CMOS Version of the SN75LVDS84. Power Consumption About One Third of the ’LVDS84**
- **Packaged in Thin Shrink Small-Outline Package (TSSOP) With 20 Mil Terminal Pitch**
- **Consumes Less Than 0.54 mW When Disabled**
- **Wide Phase-Lock Input Frequency Range: 31 MHz to 75 MHz**
- **No External Components Required for PLL**
- **Outputs Meet or Exceed the Requirements of ANSI EIA/TIA-644 Standard**
- **SSC Tracking Capability of 3% Center Spread at 50-kHz Modulation Frequency**
- **Improved Replacement for SN75LVDS84 and NSC’s DS90CF363A 3-V Device**
- **Available in Q-Temp Automotive**
  High Reliability Automotive Applications
  Configuration Control / Print Support
  Qualification to Automotive Standards

DGG PACKAGE
(TOP VIEW)

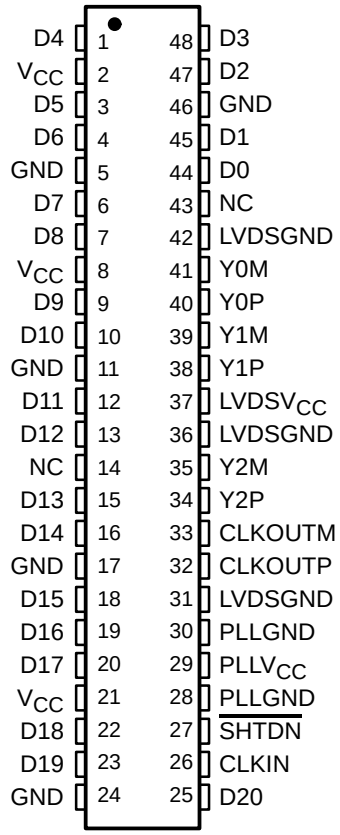

NC – Not Connected

description

The SN75LVDS84A and SN65LVDS84AQ FlatLink transmitters contains three 7-bit parallel-load serial-out shift registers, and four low-voltage differential signaling (LVDS) line drivers in a single integrated circuit. These functions allow 21 bits of single-ended LVTTL data to be synchronously transmitted over 3 balanced-pair conductors for receipt by a compatible receiver, such as the SN75LVDS82 or SN75LVDS86/86A.

When transmitting, data bits D0 – D20 are each loaded into registers of the ’LVDS84A upon the falling edge. The internal PLL is frequency-locked to CLKIN and then used to unload the data registers in 7-bit slices. The three serial streams and a phase-locked clock (CLKOUT) are then output to LVDS output drivers. The frequency of CLKOUT is the same as the input clock, CLKIN.

Please be aware that an important notice concerning availability, standard warranty, and use in critical applications of Texas Instruments semiconductor products and disclaimers thereto appears at the end of this data sheet.

FlatLink is a trademark of Texas Instruments.

PRODUCTION DATA information is current as of publication date. Products conform to specifications per the terms of Texas Instruments standard warranty. Production processing does not necessarily include testing of all parameters.

Copyright © 2001, Texas Instruments Incorporated

description (continued)

The 'LVDS84A requires no external components and little or no control. The data bus appears the same at the input to the transmitter and output of the receiver with the data transmission transparent to the user(s). The only user intervention is the possible use of the shutdown/clear ($\overline{\text{SHTDN}}$) active-low input to inhibit the clock and shut off the LVDS output drivers for lower power consumption. A low-level on this signal clears all internal registers to a low level.

The SN75LVDS84A is characterized for operation over ambient free-air temperatures of 0°C to 70°C. The SN65LVDS84AQ is characterized for operation over the full Automotive temperature range of –40°C to 125°C.

functional block diagram

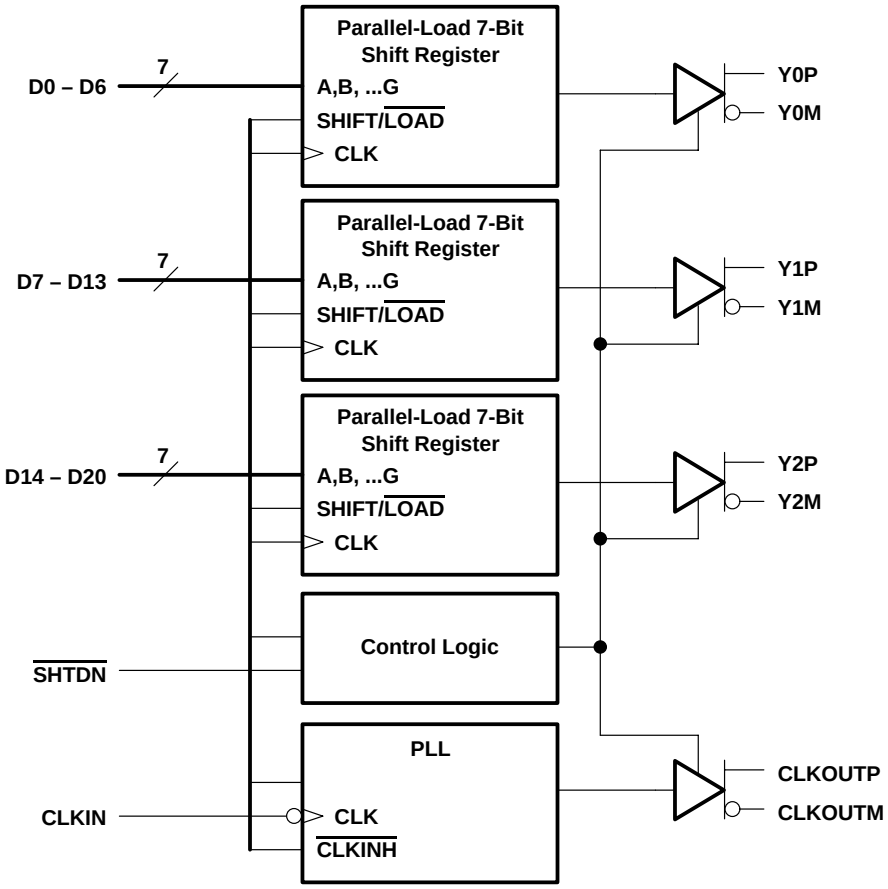

schematics of input and output

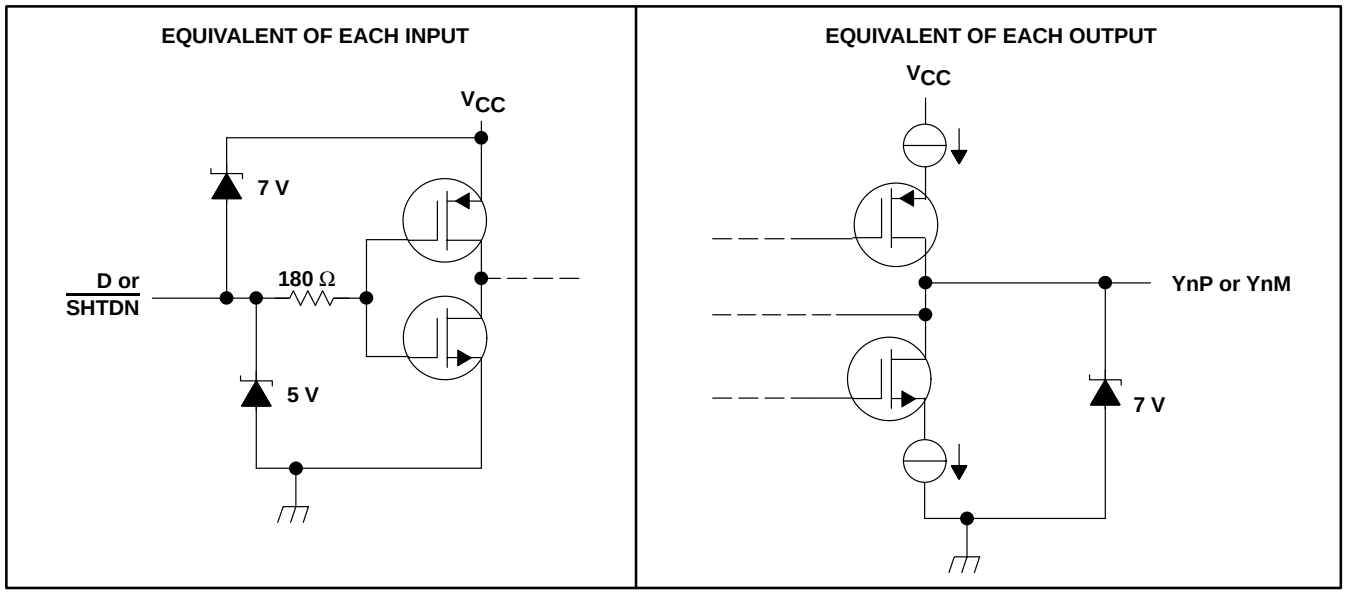

absolute maximum ratings over operating free-air temperature (unless otherwise noted)†

Supply voltage range, V_{CC} (see Note 1) . . . . . –0.5 V to 4 V
Input and output voltage ranges, V_I, V_O (all terminals) . . . . . –0.5 V to V_{CC} + 0.5 V
Continuous total power dissipation . . . . . See Dissipation Rating Table
Operating virtual junction temperature range, T_J . . . . . –40°C to 150°C
Electrostatic discharge: ESD machine model . . . . . 200 V
ESD human-body model . . . . . 6000 V
ESD charged-device model . . . . . 1500 V
Storage temperature range, T_{stg} . . . . . –65°C to 150°C
Lead temperature 1,6 mm (1/16 inch) from case for 10 seconds . . . . . 260°C

† Stresses beyond those listed under “absolute maximum ratings” may cause permanent damage to the device. These are stress ratings only, and functional operation of the device at these or any other conditions beyond those indicated under “recommended operating conditions” is not implied. Exposure to absolute-maximum-rated conditions for extended periods may affect device reliability.

NOTE 1: All voltage values are with respect to the GND terminals.

DISSIPATION RATING TABLE

PACKAGE	$T_A \le 25°C$ POWER RATING	DERATING FACTOR‡ ABOVE $T_A = 25°C$	$T_A = 70°C$ POWER RATING	$T_A = 125°C$ POWER RATING
DGG	1637 mW	13.1 mW/°C	1048 mW	327 mW

‡ This is the inverse of the junction-to-ambient thermal resistance when board mounted and with no air flow.

recommended operating conditions

		MIN	NOM	MAX	UNIT
Supply voltage, V_{CC}		3	3.3	3.6	V
High-level input voltage, V_{IH}		2			V
Low-level input voltage, V_{IL}				0.8	V
Differential load impedance, Z_L		90		132	Ω
Operating free-air temperature, T_A	SN75LVDS84A	0		70	°C
	SN65LVDS84AQ	–40		125	

timing requirements

		MIN	NOM	MAX	UNIT
t_c	Input clock period	13.3	t_c	32.4	ns
t_w	Pulse duration, high-level input clock	$0.4t_c$		$0.6t_c$	ns
t_t	Transition time, input signal			5	ns
t_{su}	Setup time, data, D0 – D20 valid before CLKIN↓ (see Figure 2)	3			ns
t_h	Hold time, data, D0 – D20 valid after CLKIN↓ (see Figure 2)	1.5			ns

electrical characteristics over recommended operating conditions (unless otherwise noted)

PARAMETER		TEST CONDITIONS		MIN	TYP†	MAX	UNIT
V_{IT}	Input threshold voltage				1.4		V
$\|V_{OD}\|$	Differential steady-state output voltage magnitude	R_L = 100 Ω, See Figure 3		247		454	mV
$\Delta\|V_{OD}\|$	Change in the steady-state differential output voltage magnitude between opposite binary states					50	mV
$V_{OC(SS)}$	Steady-state common-mode output voltage	R_L = 100 Ω, See Figure 3		1.125		1.375	V
$V_{OC(PP)}$	Peak-to-peak common-mode output voltage				80	150	mV
I_{IH}	High-level input current	$V_{IH} = V_{CC}$	SN75LVDS84A			20	µA
			SN65LVDS84AQ			25	
I_{IL}	Low-level input current	V_{IL} = 0				±10	µA
I_{OS}	Short-circuit output current	$V_{O(Yn)}$ = 0			–6	±24	mA
		V_{OD} = 0			–6	±12	mA
I_{OZ}	High-impedance output current	V_O = 0 to V_{CC}				±10	µA
$I_{CC(AVG)}$	Quiescent supply current (average)	Disabled, All inputs at GND	SN75LVDS84A		15	150	µA
			SN65LVDS84AQ		15	170	
		Enabled, R_L = 100 Ω (4 places) Gray-scale pattern (see Figure 4)	f = 65 MHz		27	35	mA
			f = 75 MHz		30	38	
		Enabled, R_L = 100 Ω, (4 places) Worst-case pattern (see Figure 5)	f = 65 MHz		28	36	
			f = 75 MHz		31	39	
C_I	Input capacitance				2		pF

† All typical values are at V_{CC} = 3.3 V, T_A = 25°C.

switching characteristics over recommended operating conditions (unless otherwise noted)

PARAMETER		TEST CONDITIONS	MIN	TYP†	MAX	UNIT
t_{d0}	Delay time, CLKOUT↑ to serial bit position 0	t_c = 15.38 ns (± 0.2%), |Input clock jitter| < 50 ps‡, See Figure 6	−0.2		0.2	ns
t_{d1}	Delay time, CLKOUT↑ to serial bit position 1		$\frac{1}{7}t_c$ − 0.2		$\frac{1}{7}t_c$ + 0.2	
t_{d2}	Delay time, CLKOUT↑ to serial bit position 2		$\frac{2}{7}t_c$ − 0.2		$\frac{2}{7}t_c$ + 0.2	
t_{d3}	Delay time, CLKOUT↑ to serial bit position 3		$\frac{3}{7}t_c$ − 0.2		$\frac{3}{7}t_c$ + 0.2	
t_{d4}	Delay time, CLKOUT↑ to serial bit position 4		$\frac{4}{7}t_c$ − 0.2		$\frac{4}{7}t_c$ + 0.2	
t_{d5}	Delay time, CLKOUT↑ to serial bit position 5		$\frac{5}{7}t_c$ − 0.2		$\frac{5}{7}t_c$ + 0.2	
t_{d6}	Delay time, CLKOUT↑ to serial bit position 6		$\frac{6}{7}t_c$ − 0.2		$\frac{6}{7}t_c$ + 0.2	
$t_{sk(o)}$	Output skew, $t_n - \frac{n}{7}t_c$		−0.2		0.2	ns
t_{d7}	Delay time, CLKIN↓ to CLKOUT↑	t_c = 15.38 ns (± 0.2%), |Input clock jitter| < 50 ps‡, See Figure 6		2.7		ns
		t_c = 13.33 ns ~ 32.25 ns (± 0.2%), |Input clock jitter| < 50 ps‡, See Figure 6	1		4.5	
$\Delta t_{c(o)}$	Cycle time, output clock jitter§	t_c = 15.38 + 0.308 sin (2π500E3t) ± 0.05 ns, See Figure 7		±62		ps
		t_c = 15.38 + 0.308 sin (2π3E6t) ± 0.05 ns, See Figure 7		±121		
t_w	Pulse duration, high-level output clock			$\frac{4}{7}t_c$		ns
t_t	Transition time, differential output voltage (t_r or t_f)	See Figure 3		700	1500	ps
t_{en}	Enable time, $\overline{SHTDN}$↑ to phase lock (Yn valid)	See Figure 8		1		ms
t_{dis}	Disable time, $\overline{SHTDN}$↓ to off state (CLKOUT low)	See Figure 9		6.5		ns

† All typical values are at V_{CC} = 3.3 V, T_A = 25°C.
‡ |Input clock jitter| is the magnitude of the change in the input clock period.
§ Output clock jitter is the change in the output clock period from one cycle to the next cycle observed over 15000 cycles.

PARAMETER MEASUREMENT INFORMATION

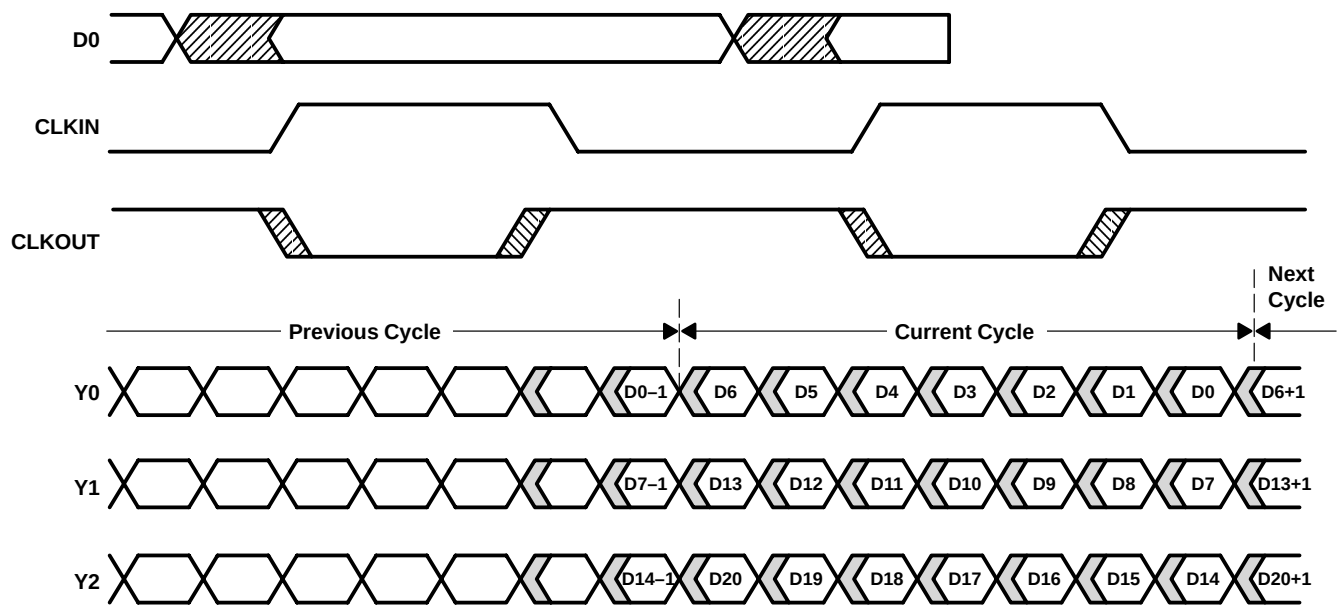

Figure 1. Typical Load and Shift Sequences

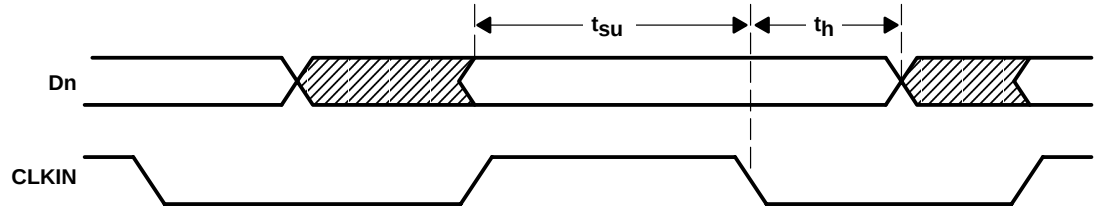

NOTE A: All input timing is defined at 1.4 V on an input signal with a 10%-to-90% rise or fall time of less than 5 ns.

Figure 2. Setup and Hold Time Definition

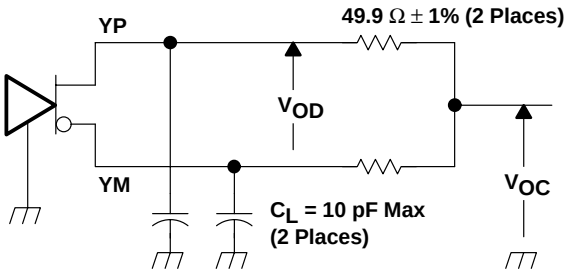

NOTE A: The lumped instrumentation capacitance for any single-ended voltage measurement is less than or equal to 10 pF. When making measurements at YP or YM, the complementary output is similarly loaded.

(a) SCHEMATIC

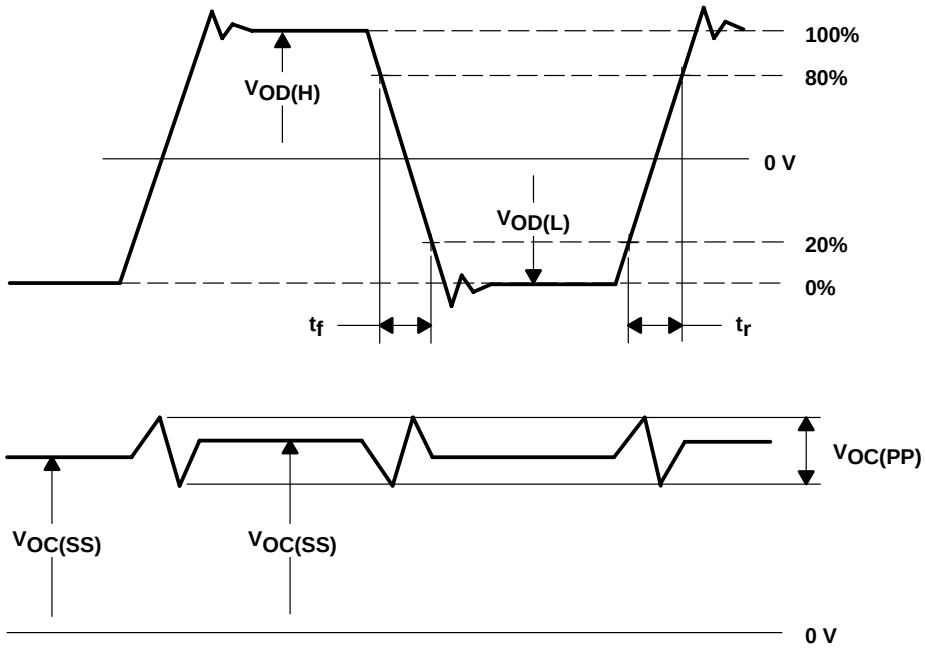

(b) WAVEFORMS

Figure 3. Test Load and Voltage Definitions for LVDS Outputs

PARAMETER MEASUREMENT INFORMATION

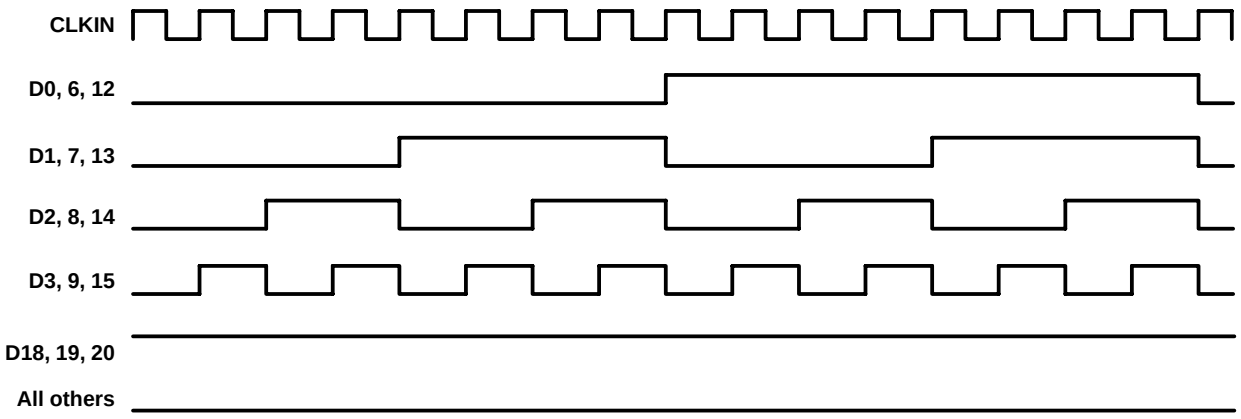

NOTES: A. The 16-grayscale test-pattern test device power consumption for a typical display pattern.
B. V_{IH} = 2 V and V_{IL} = 0.8 V

Figure 4. 16-Grayscale Test-Pattern Waveforms

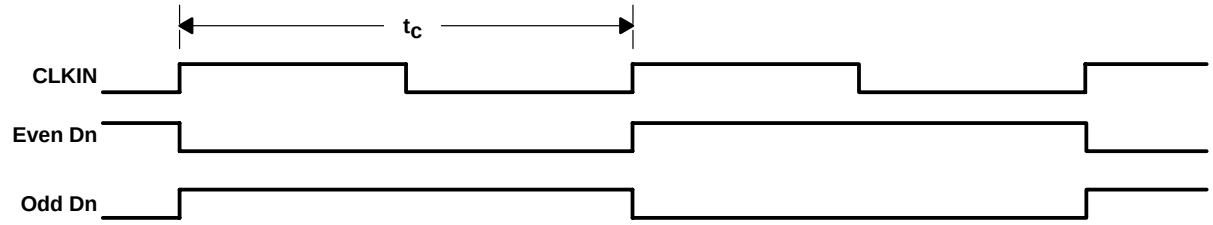

NOTES: A. The worst-case test pattern produces nearly the maximum switching frequency for all of the LVDS outputs.
B. V_{IH} = 2 V and V_{IL} = 0.8 V

Figure 5. Worst-Case Test-Pattern Waveforms

PARAMETER MEASUREMENT INFORMATION

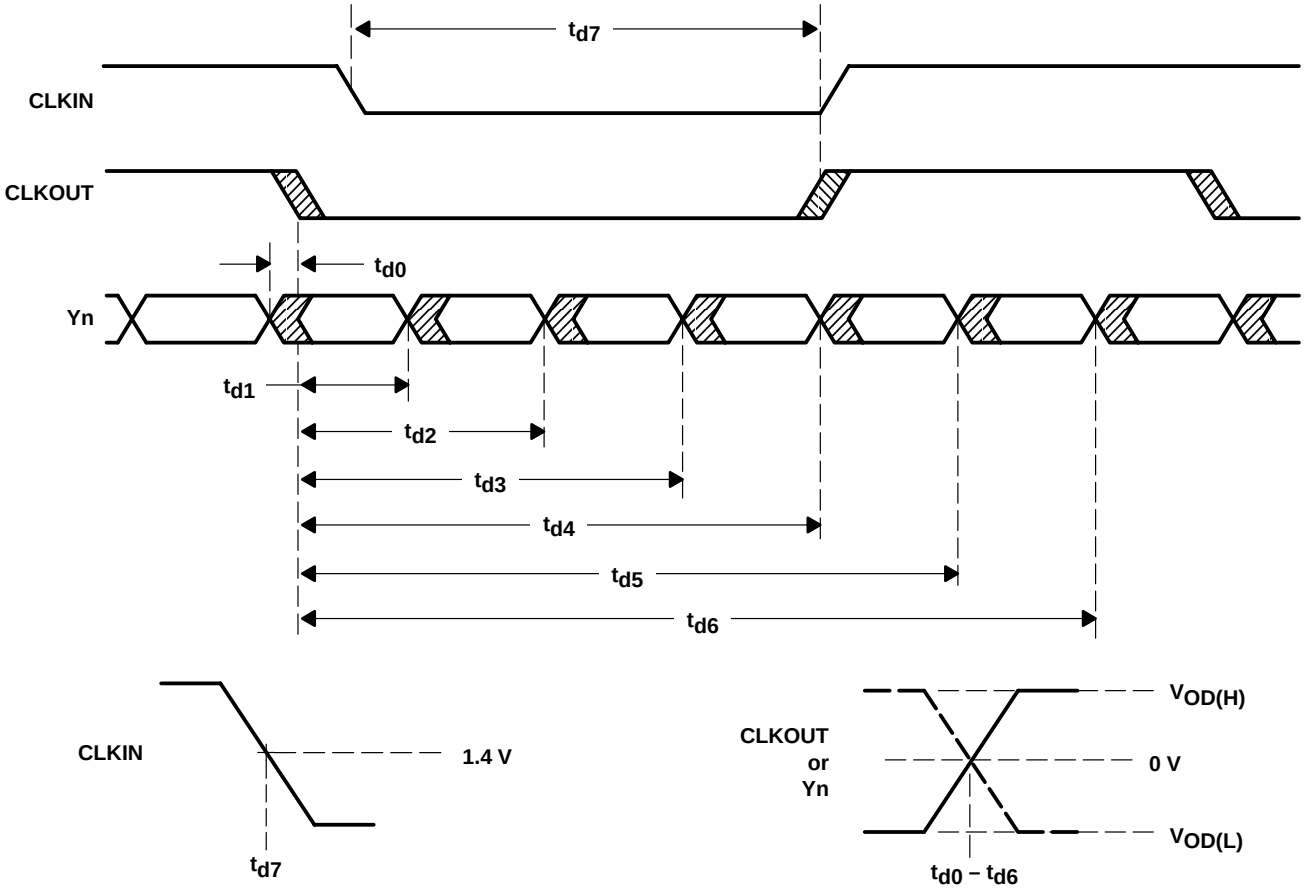

Figure 6. Timing Definitions

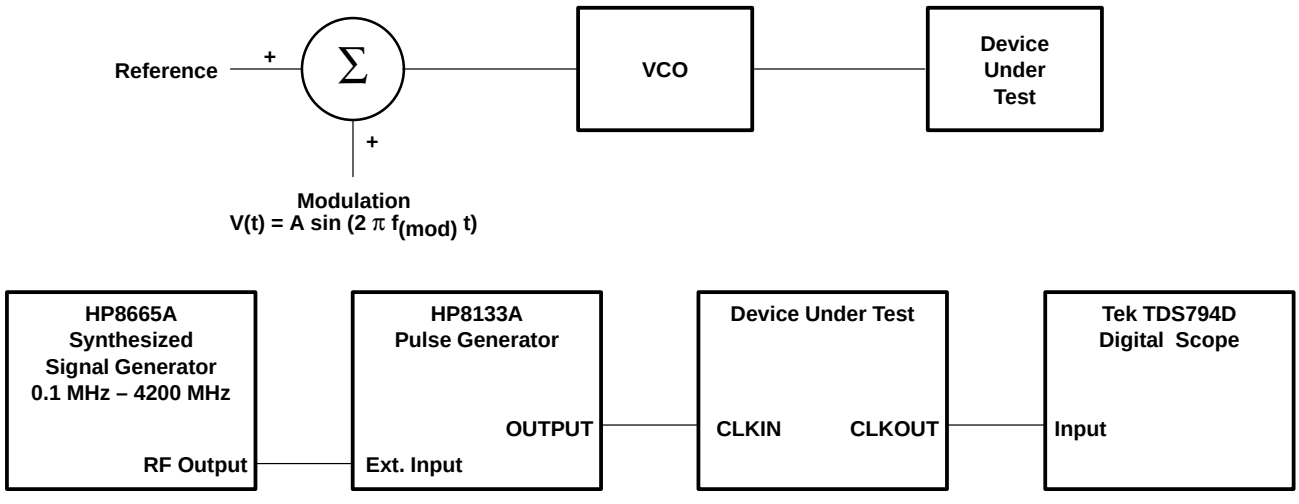

Figure 7. Clock Jitter Test Setup

TYPICAL CHARACTERISTICS

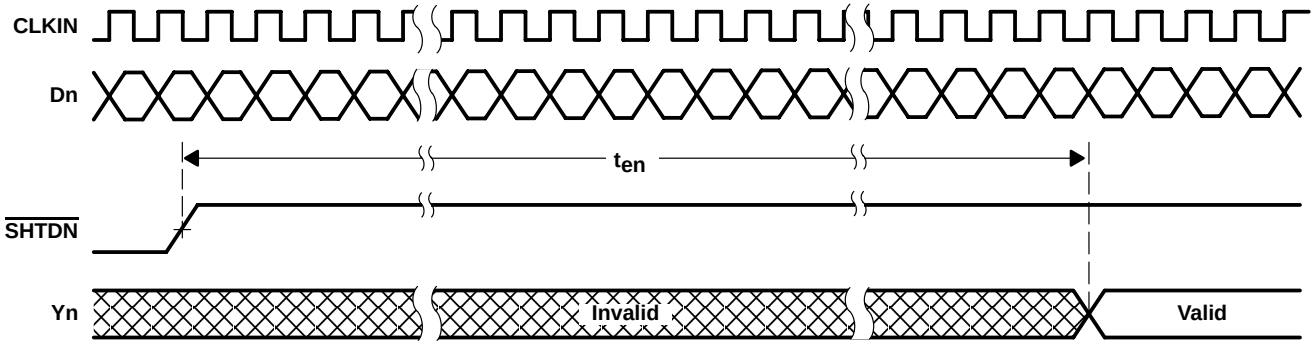

Figure 8. Enable Time Waveforms

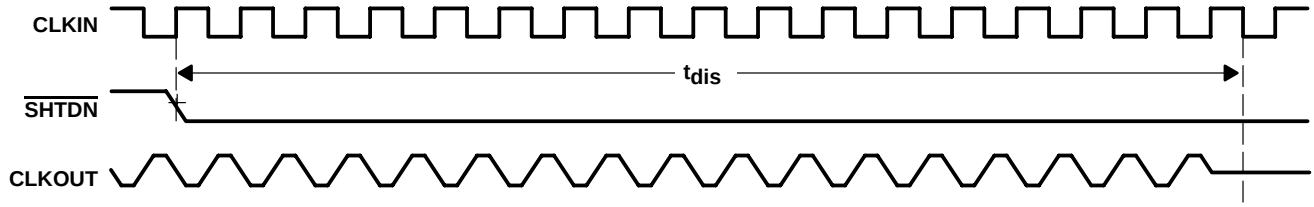

Figure 9. Disable Time Waveforms

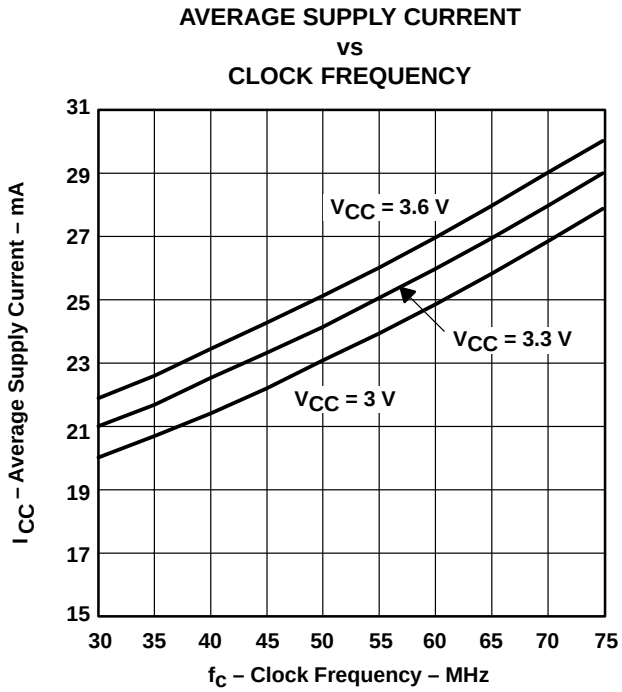

Figure 10. Grayscale Input Pattern

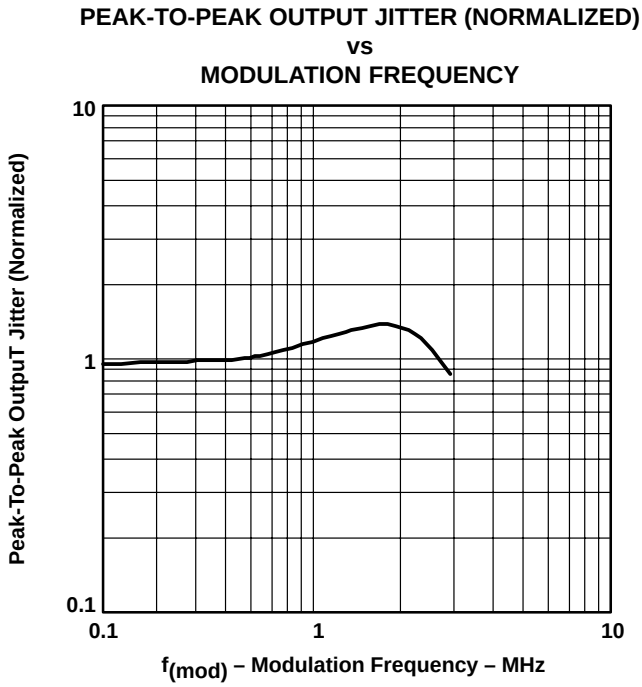

Figure 11. Output Period Jitter vs Modulation Frequency

APPLICATION INFORMATION

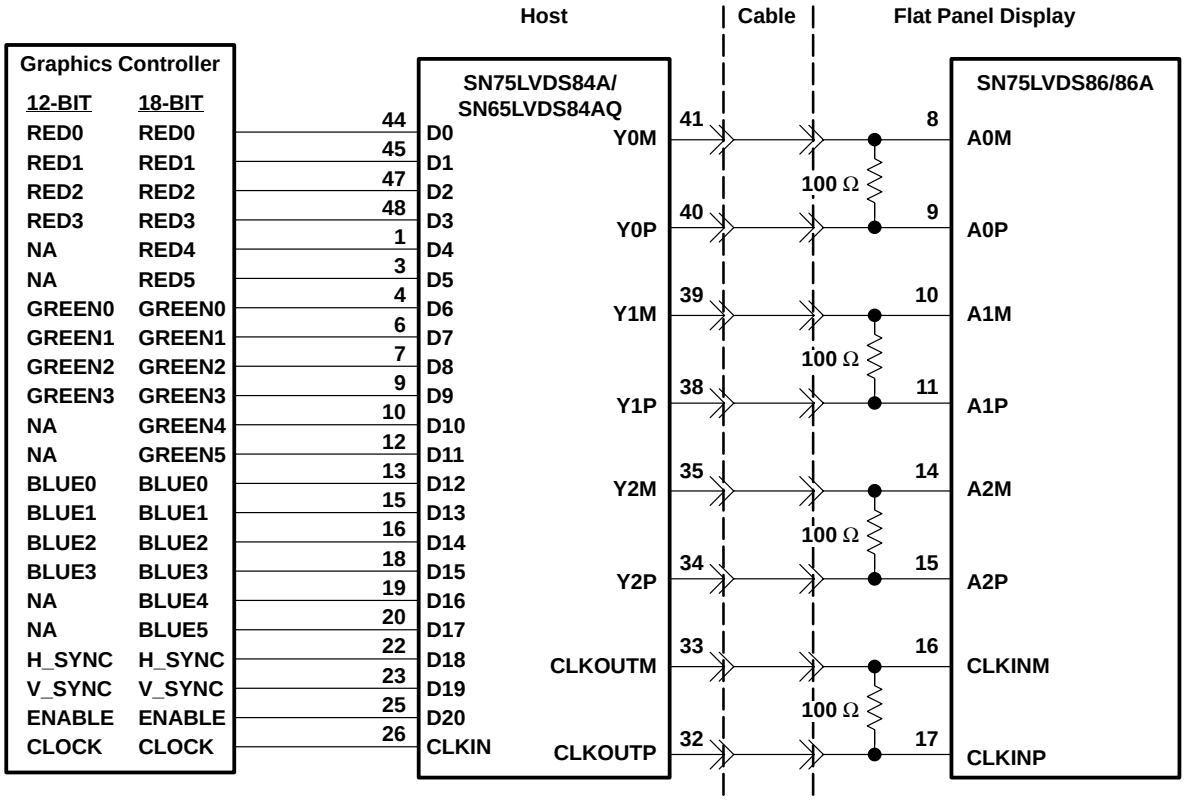

NOTES: A. The five 100-Ω terminating resistors are recommended to be 0603 types.
B. NA – not applicable, these unused inputs should be left open.

Figure 12. Color Host to LCD Panel Application

APPLICATION INFORMATION

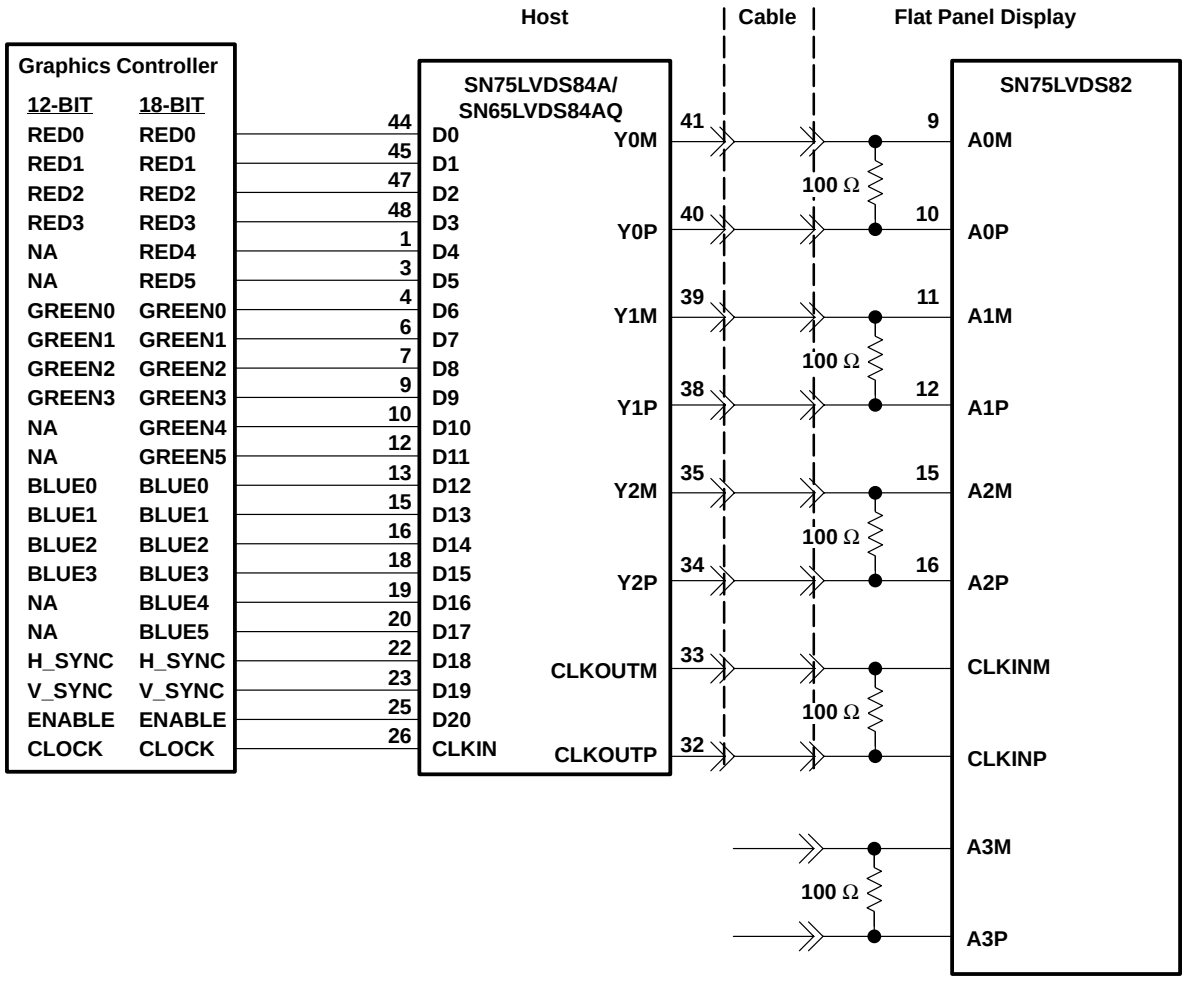

NOTES: A. The four 100-Ω terminating resistors are recommended to be 0603 types.
B. NA – not applicable, these unused inputs should be left open.

Figure 13. 18-Bit Color Host to 24-Bit LCD Display Panel Application

PACKAGING INFORMATION

Orderable part number	Status (1)	Material type (2)	Package | Pins	Package qty | Carrier	RoHS (3)	Lead finish/ Ball material (4)	MSL rating/ Peak reflow (5)	Op temp (°C)	Part marking (6)
SN65LVDS84AQDGG	Active	Production	TSSOP (DGG) | 48	40 | TUBE	Yes	NIPDAU	Level-2-260C-1 YEAR	-40 to 125	65LVDS84AQ
SN65LVDS84AQDGG.A	Active	Production	TSSOP (DGG) | 48	40 | TUBE	Yes	NIPDAU	Level-2-260C-1 YEAR	-40 to 125	65LVDS84AQ
SN65LVDS84AQDGGR	Active	Production	TSSOP (DGG) | 48	2000 | LARGE T&R	Yes	NIPDAU	Level-2-260C-1 YEAR	-40 to 125	65LVDS84AQ
SN65LVDS84AQDGGR.A	Active	Production	TSSOP (DGG) | 48	2000 | LARGE T&R	Yes	NIPDAU	Level-2-260C-1 YEAR	-40 to 125	65LVDS84AQ
SN75LVDS84ADGG	Active	Production	TSSOP (DGG) | 48	40 | TUBE	Yes	NIPDAU	Level-2-260C-1 YEAR	0 to 70	SN75LVDS84A
SN75LVDS84ADGG.A	Active	Production	TSSOP (DGG) | 48	40 | TUBE	Yes	NIPDAU	Level-2-260C-1 YEAR	0 to 70	SN75LVDS84A
SN75LVDS84ADGGR	Active	Production	TSSOP (DGG) | 48	2000 | LARGE T&R	Yes	NIPDAU	Level-2-260C-1 YEAR	0 to 70	SN75LVDS84A
SN75LVDS84ADGGR.A	Active	Production	TSSOP (DGG) | 48	2000 | LARGE T&R	Yes	NIPDAU	Level-2-260C-1 YEAR	0 to 70	SN75LVDS84A
SN75LVDS84ADGGRG4	Active	Production	TSSOP (DGG) | 48	2000 | LARGE T&R	Yes	NIPDAU	Level-2-260C-1 YEAR	0 to 70	SN75LVDS84A
SN75LVDS84ADGGRG4.A	Active	Production	TSSOP (DGG) | 48	2000 | LARGE T&R	Yes	NIPDAU	Level-2-260C-1 YEAR	0 to 70	SN75LVDS84A

(1) **Status:** For more details on status, see our product life cycle.

(2) **Material type:** When designated, preproduction parts are prototypes/experimental devices, and are not yet approved or released for full production. Testing and final process, including without limitation quality assurance, reliability performance testing, and/or process qualification, may not yet be complete, and this item is subject to further changes or possible discontinuation. If available for ordering, purchases will be subject to an additional waiver at checkout, and are intended for early internal evaluation purposes only. These items are sold without warranties of any kind.

(3) **RoHS values:** Yes, No, RoHS Exempt. See the TI RoHS Statement for additional information and value definition.

(4) **Lead finish/Ball material:** Parts may have multiple material finish options. Finish options are separated by a vertical ruled line. Lead finish/Ball material values may wrap to two lines if the finish value exceeds the maximum column width.

(5) **MSL rating/Peak reflow:** The moisture sensitivity level ratings and peak solder (reflow) temperatures. In the event that a part has multiple moisture sensitivity ratings, only the lowest level per JEDEC standards is shown. Refer to the shipping label for the actual reflow temperature that will be used to mount the part to the printed circuit board.

(6) **Part marking:** There may be an additional marking, which relates to the logo, the lot trace code information, or the environmental category of the part.

Multiple part markings will be inside parentheses. Only one part marking contained in parentheses and separated by a "~" will appear on a part. If a line is indented then it is a continuation of the previous line and the two combined represent the entire part marking for that device.

Important Information and Disclaimer: The information provided on this page represents TI's knowledge and belief as of the date that it is provided. TI bases its knowledge and belief on information provided by third parties, and makes no representation or warranty as to the accuracy of such information. Efforts are underway to better integrate information from third parties. TI has taken and continues to take reasonable steps to provide representative

and accurate information but may not have conducted destructive testing or chemical analysis on incoming materials and chemicals. TI and TI suppliers consider certain information to be proprietary, and thus CAS numbers and other limited information may not be available for release.

In no event shall TI's liability arising out of such information exceed the total purchase price of the TI part(s) at issue in this document sold by TI to Customer on an annual basis.

TAPE AND REEL INFORMATION

REEL DIMENSIONS

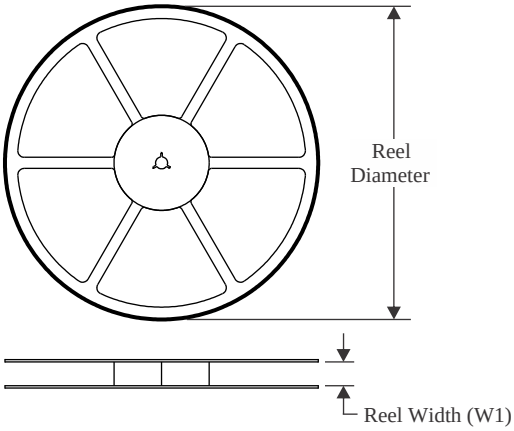

TAPE DIMENSIONS

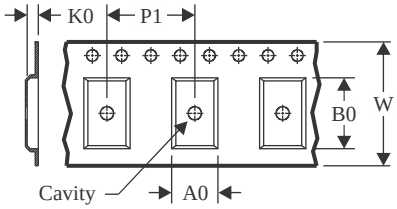

A0	Dimension designed to accommodate the component width
B0	Dimension designed to accommodate the component length
K0	Dimension designed to accommodate the component thickness
W	Overall width of the carrier tape
P1	Pitch between successive cavity centers

QUADRANT ASSIGNMENTS FOR PIN 1 ORIENTATION IN TAPE

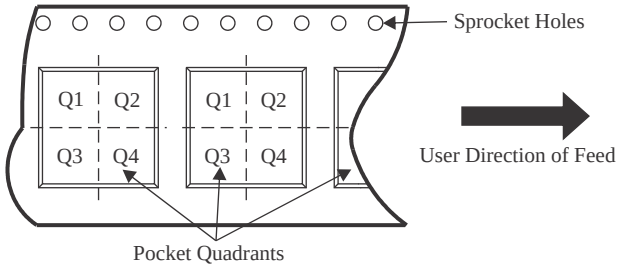

*All dimensions are nominal

Device	Package Type	Package Drawing	Pins	SPQ	Reel Diameter (mm)	Reel Width W1 (mm)	A0 (mm)	B0 (mm)	K0 (mm)	P1 (mm)	W (mm)	Pin1 Quadrant
SN65LVDS84AQDGGR	TSSOP	DGG	48	2000	330.0	24.4	8.6	13.0	1.8	12.0	24.0	Q1
SN75LVDS84ADGGR	TSSOP	DGG	48	2000	330.0	24.4	8.6	13.0	1.8	12.0	24.0	Q1
SN75LVDS84ADGGRG4	TSSOP	DGG	48	2000	330.0	24.4	8.6	13.0	1.8	12.0	24.0	Q1

TAPE AND REEL BOX DIMENSIONS

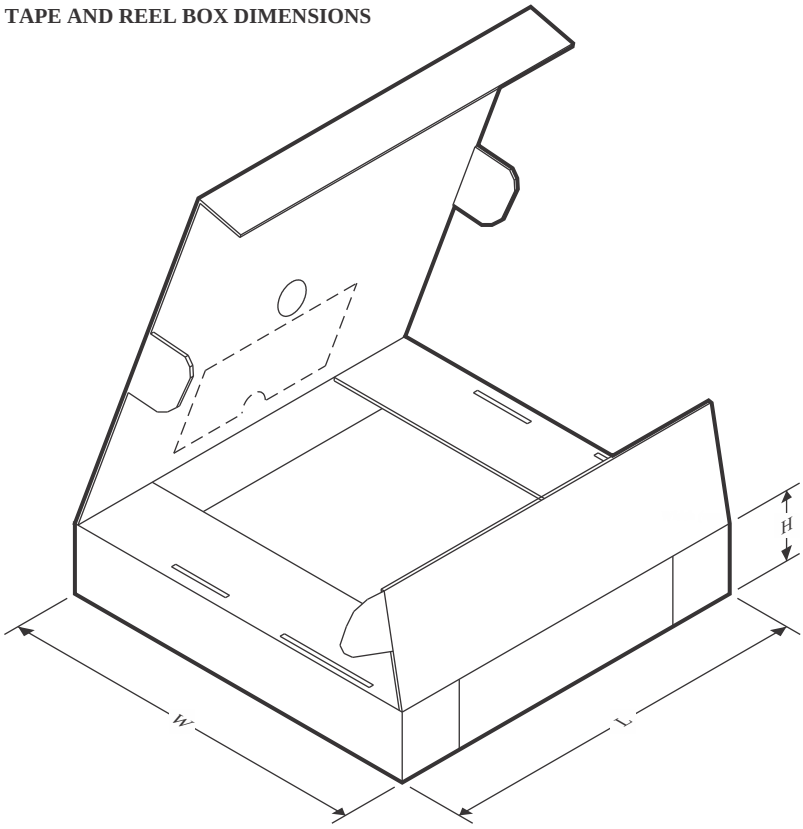

*All dimensions are nominal

Device	Package Type	Package Drawing	Pins	SPQ	Length (mm)	Width (mm)	Height (mm)
SN65LVDS84AQDGGR	TSSOP	DGG	48	2000	350.0	350.0	43.0
SN75LVDS84ADGGR	TSSOP	DGG	48	2000	350.0	350.0	43.0
SN75LVDS84ADGGRG4	TSSOP	DGG	48	2000	350.0	350.0	43.0

TUBE

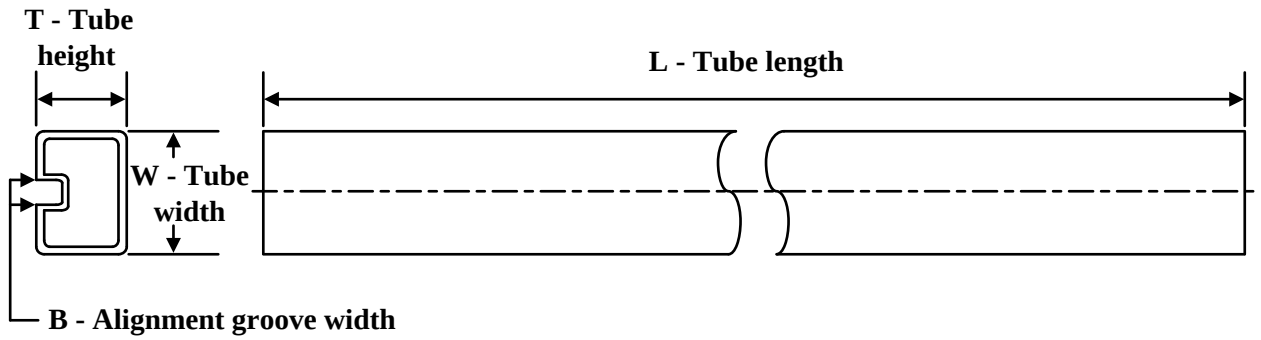

*All dimensions are nominal

Device	Package Name	Package Type	Pins	SPQ	L (mm)	W (mm)	T (µm)	B (mm)
SN65LVDS84AQDGG	DGG	TSSOP	48	40	530	11.89	3600	4.9
SN65LVDS84AQDGG.A	DGG	TSSOP	48	40	530	11.89	3600	4.9
SN75LVDS84ADGG	DGG	TSSOP	48	40	530	11.89	3600	4.9
SN75LVDS84ADGG.A	DGG	TSSOP	48	40	530	11.89	3600	4.9

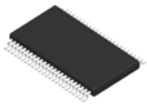

PACKAGE OUTLINE

DGG0048A

TSSOP - 1.2 mm max height

SMALL OUTLINE PACKAGE

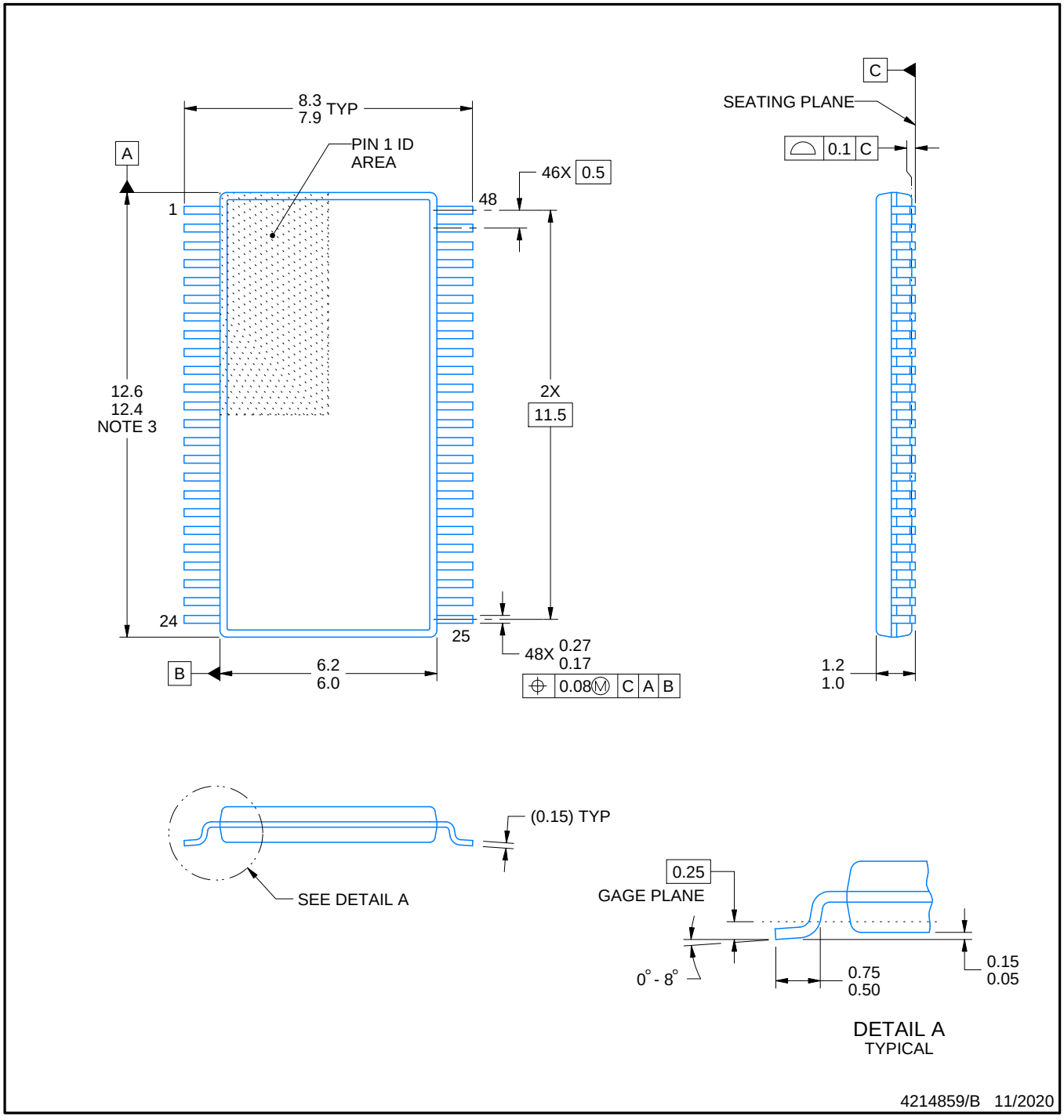

NOTES:

1. All linear dimensions are in millimeters. Any dimensions in parenthesis are for reference only. Dimensioning and tolerancing per ASME Y14.5M.
2. This drawing is subject to change without notice.
3. This dimension does not include mold flash, protrusions, or gate burrs. Mold flash, protrusions, or gate burrs shall not exceed 0.15 mm per side.
4. Reference JEDEC registration MO-153.

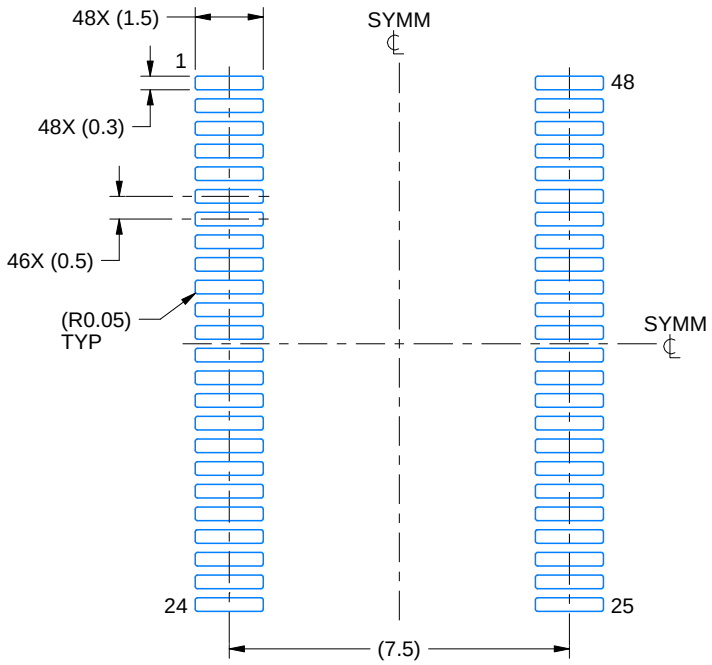

LAND PATTERN EXAMPLE
SCALE:6X

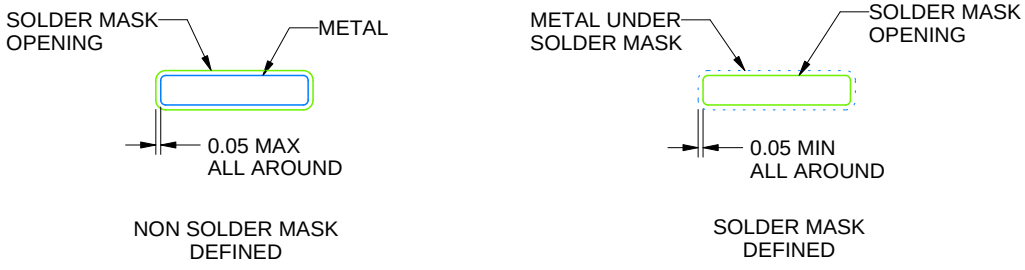

SOLDER MASK DETAILS

4214859/B 11/2020

NOTES: (continued)

5. Publication IPC-7351 may have alternate designs.
6. Solder mask tolerances between and around signal pads can vary based on board fabrication site.

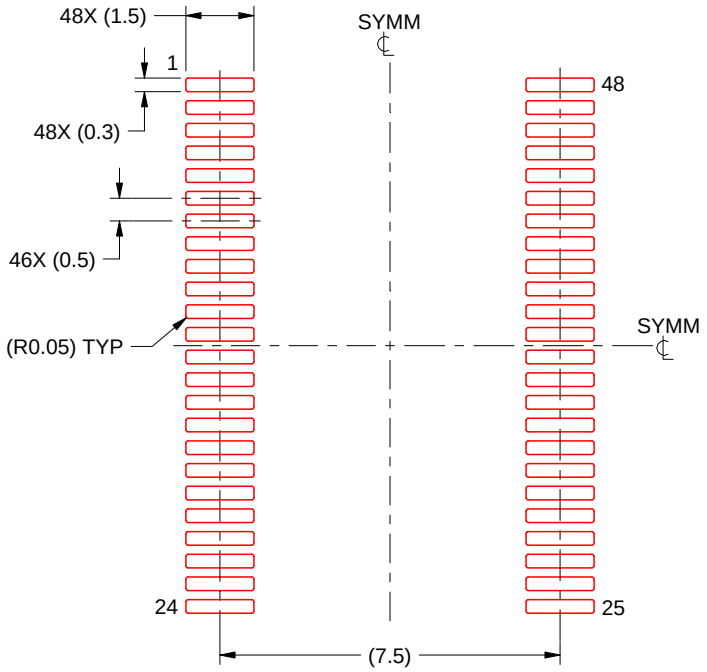

SOLDER PASTE EXAMPLE
BASED ON 0.125 mm THICK STENCIL
SCALE:6X

4214859/B 11/2020

NOTES: (continued)

7. Laser cutting apertures with trapezoidal walls and rounded corners may offer better paste release. IPC-7525 may have alternate design recommendations.
8. Board assembly site may have different recommendations for stencil design.

DGG (R-PDSO-G)** **PLASTIC SMALL-OUTLINE PACKAGE**

48 PINS SHOWN

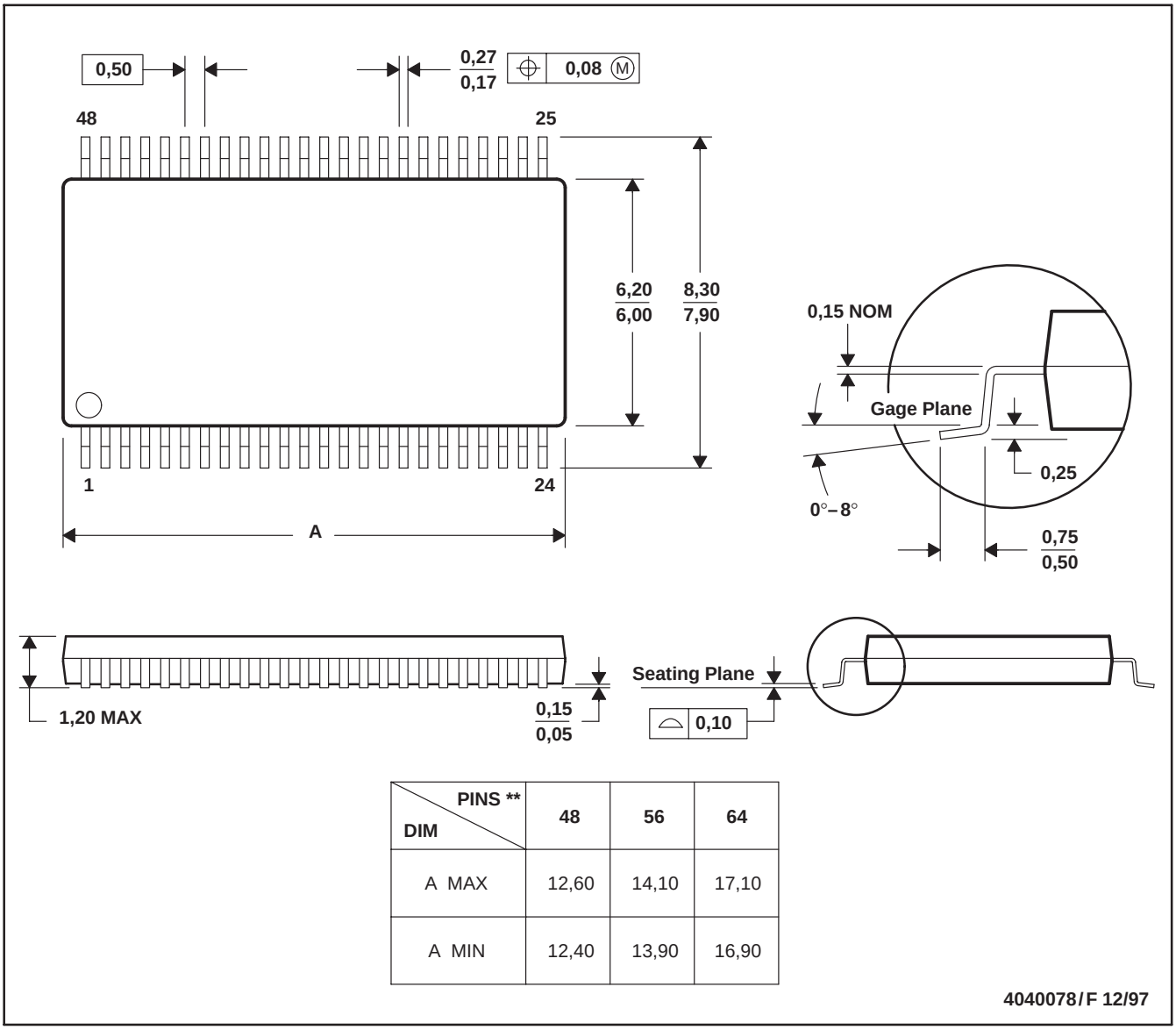

DIM \ PINS **	48	56	64
A MAX	12,60	14,10	17,10
A MIN	12,40	13,90	16,90

NOTES: A. All linear dimensions are in millimeters.
B. This drawing is subject to change without notice.
C. Body dimensions do not include mold protrusion not to exceed 0,15.
D. Falls within JEDEC MO-153

IMPORTANT NOTICE AND DISCLAIMER

TI PROVIDES TECHNICAL AND RELIABILITY DATA (INCLUDING DATA SHEETS), DESIGN RESOURCES (INCLUDING REFERENCE DESIGNS), APPLICATION OR OTHER DESIGN ADVICE, WEB TOOLS, SAFETY INFORMATION, AND OTHER RESOURCES “AS IS” AND WITH ALL FAULTS, AND DISCLAIMS ALL WARRANTIES, EXPRESS AND IMPLIED, INCLUDING WITHOUT LIMITATION ANY IMPLIED WARRANTIES OF MERCHANTABILITY, FITNESS FOR A PARTICULAR PURPOSE OR NON-INFRINGEMENT OF THIRD PARTY INTELLECTUAL PROPERTY RIGHTS.

These resources are intended for skilled developers designing with TI products. You are solely responsible for (1) selecting the appropriate TI products for your application, (2) designing, validating and testing your application, and (3) ensuring your application meets applicable standards, and any other safety, security, regulatory or other requirements.

These resources are subject to change without notice. TI grants you permission to use these resources only for development of an application that uses the TI products described in the resource. Other reproduction and display of these resources is prohibited. No license is granted to any other TI intellectual property right or to any third party intellectual property right. TI disclaims responsibility for, and you will fully indemnify TI and its representatives against, any claims, damages, costs, losses, and liabilities arising out of your use of these resources.

TI’s products are provided subject to TI’s Terms of Sale or other applicable terms available either on ti.com or provided in conjunction with such TI products. TI’s provision of these resources does not expand or otherwise alter TI’s applicable warranties or warranty disclaimers for TI products.

TI objects to and rejects any additional or different terms you may have proposed.

Mailing Address: Texas Instruments, Post Office Box 655303, Dallas, Texas 75265
Copyright © 2025, Texas Instruments Incorporated