TPSM8S6B24S, 2.95V to 16V, Single 25A, Synchronous, Buck Power Module, Up to 4 × Stackable, With PMBus® and Extended Write Protection

1 Features

- Integrated extended security feature
- 4.25V to 16V with PVIN tied to AVIN with internal LDO
- 2.95V to 16V with PVIN and AVIN split rail, or with external bias on VDD5
- Integrated MOSFETs, inductors, and basic passives
- Average current mode control with selectable internal compensation
- 0.5V to 5.5V output voltage range from through pinstrap
- 0.25V to 5.5V PMBus® VOUT_COMMAND range
- Extensive PMBus command set with telemetry for V_{OUT}, I_{OUT}, and die temperature
- Differential remote sensing with an internal FB divider for < 1% V_{OUT} error
- –40°C to +125°C T_J
- AVS and margining capabilities through PMBus
- Multi function select (MSEL) pins for pinstrap programming PMBus defaults
- Nine selectable switching frequencies from 275kHz to 1.1MHz
- Frequency sync in, sync out
- Supports prebiased output
- 16mm × 11mm × 4.3mm, 45-pin MOY package
- Create a custom design using the TPSM8S6B24S with the WEBENCH® Power Designer

2 Applications

- Data center switches, rack servers
- Active antenna system, remote radio, and baseband unit
- Automated test equipment, CT, PET, and MRI
- ASIC, SoC, FPGA, DSP core, and I/O voltage

3 Description

TPSM8S6B24S is a highly integrated, easy-to-use, non-isolated DC/DC buck power module with added manufacturer-specific PMBus commands. The addition of EXTENDED_WRITE_PROTECT and PASSKEY improves security against malicious access to the PMBus by restricting Write capability with greater resolution than the standard Write Protect command.

TPSM8S6B24S is a 25A power module and can source up to 100A with 4 × stackability. The device has an option to overdrive the internal 5V LDO with an external 5V supply to enable lower input voltage range down to 2.95V and improve the efficiency of the converter.

TPSM8S6B24S power module uses a proprietary fixed-frequency current-mode control with input feedforward and selectable internal compensation components for minimal size and stability over a wide range of output capacitances.

The PMBus interface with 1MHz clock support to provide a convenient, standardized digital interface for converter configuration as well as monitoring of key parameters including output voltage, output current, and internal die temperature. Response to fault conditions can be set to restart, latch off, or ignore, depending on system requirements. Back-channel communication between stacked devices enables all TPSM8S6B24S converters, powering a single output rail to share a single address to simplify system software, firmware design. Key parameters including output voltage, switching frequency, soft-start time, and overcurrent fault limits can also be configured through BOM selection without PMBus communication to support program free power up.

Package Information

PART NUMBER	PACKAGE(1)	PACKAGE SIZE(2)
TPSM8S6B24S	MOY (QFM, 45)	16.00mm × 11.00mm

(1) For more information, see Section 11.
(2) The package size (length × width) is a nominal value and includes pins, where applicable.

An IMPORTANT NOTICE at the end of this data sheet addresses availability, warranty, changes, use in safety-critical applications, intellectual property matters and other important disclaimers. PRODUCTION DATA.

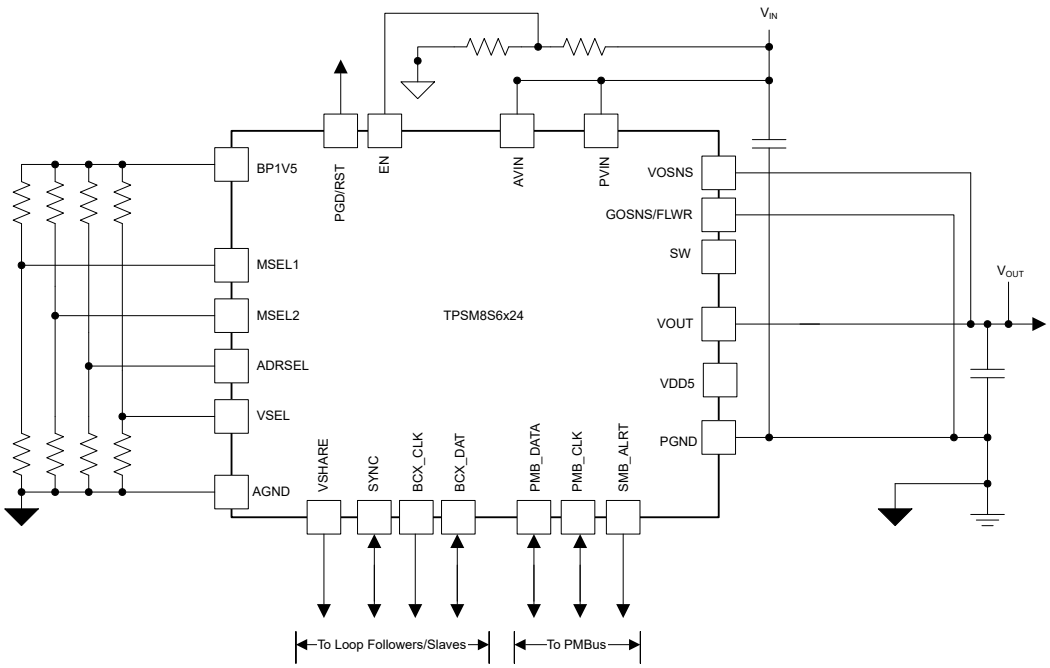

Simplified Application

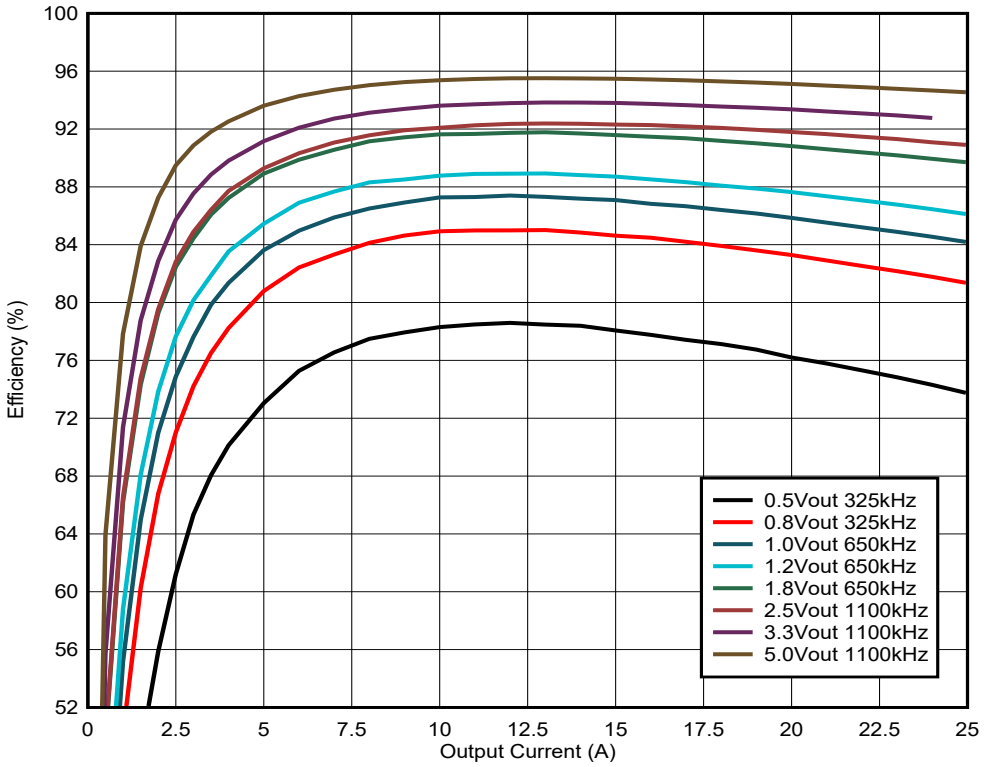

Efficiency 12Vin, INT VCC

Copyright © 2024 Texas Instruments Incorporated

Table of Contents

1 Features....1
2 Applications....1
3 Description....1
4 Pin Configuration and Functions....5
5 Specifications....7
5.1 Absolute Maximum Ratings....7
5.2 ESD Ratings....7
5.3 Recommended Operating Conditions....7
5.4 Thermal Information....8
5.5 Electrical Characteristics....8
5.6 Typical Characteristics....16
6 Detailed Description....18
6.1 Overview....18
6.2 Functional Block Diagram....18
6.3 Feature Description....19
6.4 Device Functional Modes....34
6.5 Programming....35
7 Register Maps....47
7.1 Conventions for Documenting Block Commands....47
7.2 (01h) OPERATION....48
7.3 (02h) ON_OFF_CONFIG....50
7.4 (03h) CLEAR_FAULTS....51
7.5 (04h) PHASE....52
7.6 (10h) WRITE_PROTECT....53
7.7 (15h) STORE_USER_ALL....54
7.8 (16h) RESTORE_USER_ALL....55
7.9 (19h) CAPABILITY....56
7.10 (1Bh) SMBALERT_MASK....57
7.11 (1Bh) SMBALERT_MASK_VOUT....58
7.12 (1Bh) SMBALERT_MASK_IOUT....59
7.13 (1Bh) SMBALERT_MASK_INPUT....60
7.14 (1Bh) SMBALERT_MASK_TEMPERATURE....61
7.15 (1Bh) SMBALERT_MASK_CML....62
7.16 (1Bh) SMBALERT_MASK_OTHER....63
7.17 (1Bh) SMBALERT_MASK_MFR....64
7.18 (20h) VOUT_MODE....65
7.19 (21h) VOUT_COMMAND....66
7.20 (22h) VOUT_TRIM....68
7.21 (24h) VOUT_MAX....70
7.22 (25h) VOUT_MARGIN_HIGH....71
7.23 (26h) VOUT_MARGIN_LOW....72
7.24 (27h) VOUT_TRANSITION_RATE....73
7.25 (29h) VOUT_SCALE_LOOP....74
7.26 (2Bh) VOUT_MIN....75
7.27 (33h) FREQUENCY_SWITCH....76
7.28 (35h) VIN_ON....77
7.29 (36h) VIN_OFF....78
7.30 (37h) INTERLEAVE....79
7.31 (38h) IOUT_CAL_GAIN....81
7.32 (39h) IOUT_CAL_OFFSET....82
7.33 (40h) VOUT_OV_FAULT_LIMIT....83
7.34 (41h) VOUT_OV_FAULT_RESPONSE....84
7.35 (42h) VOUT_OV_WARN_LIMIT....85
7.36 (43h) VOUT_UV_WARN_LIMIT....86
7.37 (44h) VOUT_UV_FAULT_LIMIT....87
7.38 (45h) VOUT_UV_FAULT_RESPONSE....88
7.39 (46h) IOUT_OC_FAULT_LIMIT....89
7.40 (47h) IOUT_OC_FAULT_RESPONSE....91
7.41 (4Ah) IOUT_OC_WARN_LIMIT....92
7.42 (4Fh) OT_FAULT_LIMIT....93
7.43 (50h) OT_FAULT_RESPONSE....94
7.44 (51h) OT_WARN_LIMIT....96
7.45 (55h) VIN_OV_FAULT_LIMIT....97
7.46 (56h) VIN_OV_FAULT_RESPONSE....98
7.47 (58h) VIN_UV_WARN_LIMIT....99
7.48 (60h) TON_DELAY....100
7.49 (61h) TON_RISE....101
7.50 (62h) TON_MAX_FAULT_LIMIT....102
7.51 (63h) TON_MAX_FAULT_RESPONSE....103
7.52 (64h) TOFF_DELAY....104
7.53 (65h) TOFF_FALL....105
7.54 (78h) STATUS_BYTE....106
7.55 (79h) STATUS_WORD....107
7.56 (7Ah) STATUS_VOUT....109
7.57 (7Bh) STATUS_IOUT....110
7.58 (7Ch) STATUS_INPUT....111
7.59 (7Dh) STATUS_TEMPERATURE....112
7.60 (7Eh) STATUS_CML....113
7.61 (7Fh) STATUS_OTHER....114
7.62 (80h) STATUS_MFR_SPECIFIC....115
7.63 (88h) READ_VIN....116
7.64 (8Bh) READ_VOUT....117
7.65 (8Ch) READ_IOUT....118
7.66 (8Dh) READ_TEMPERATURE_1....119
7.67 (98h) PMBUS_REVISION....120
7.68 (99h) MFR_ID....121
7.69 (9Ah) MFR_MODEL....122
7.70 (9Bh) MFR_REVISION....123
7.71 (9Eh) MFR_SERIAL....124
7.72 (ADh) IC_DEVICE_ID....125
7.73 (AEh) IC_DEVICE_REV....126
7.74 (B1h) USER_DATA_01 (COMPENSATION_CONFIG)....127
7.75 (B5h) USER_DATA_05 (POWER_STAGE_CONFIG)....129
7.76 (D0h) MFR_SPECIFIC_00 (TELEMETRY_CONFIG)....130
7.77 (DAh) MFR_SPECIFIC_10 (READ_ALL)....132
7.78 (DBh) MFR_SPECIFIC_11 (STATUS_ALL)....134
7.79 (DCh) MFR_SPECIFIC_12 (STATUS_PHASE)....136
7.80 (E3h) MFR_SPECIFIC_19 (PGOOD_CONFIG)....137
7.81 (E4h) MFR_SPECIFIC_20 (SYNC_CONFIG)....139
7.82 (ECh) MFR_SPECIFIC_28 (STACK_CONFIG)....140
7.83 (EDh) MFR_SPECIFIC_29 (MISC_OPTIONS)....141
7.84 (EEh) MFR_SPECIFIC_30 (PIN_DETECT_OVERRIDE)....142
7.85 (EFh) MFR_SPECIFIC_31 (DEVICE_ADDRESS)....144
7.86 (F0h) MFR_SPECIFIC_32 (NVM_CHECKSUM)....145
7.87 (F1h) MFR_SPECIFIC_33 (SIMULATE_FAULT)....146
7.88 (FAh) MFR_SPECIFIC_42 (PASSKEY)....148
7.89 (FBh) MFR_SPECIFIC_43 (EXT_WRITE_PROTECT)....149
7.90 (FCh) MFR_SPECIFIC_44 (FUSION_ID0)....152
7.91 (FDh) MFR_SPECIFIC_45 (FUSION_ID1)....153
8 Application and Implementation....155

Copyright © 2024 Texas Instruments Incorporated

8.1 Application Information..... 155
8.2 Typical Application..... 155
8.3 Two-Phase Application..... 163
8.4 Power Supply Recommendations..... 170
8.5 Layout..... 170
9 Device and Documentation Support..... 172
9.1 Device Support..... 172
9.2 Receiving Notification of Documentation Updates..172
9.3 Support Resources..... 172
9.4 Trademarks..... 172
9.5 Electrostatic Discharge Caution..... 173
9.6 Glossary..... 173
10 Revision History..... 173
11 Mechanical, Packaging, and Orderable Information..... 174

Copyright © 2024 Texas Instruments Incorporated

4 Pin Configuration and Functions

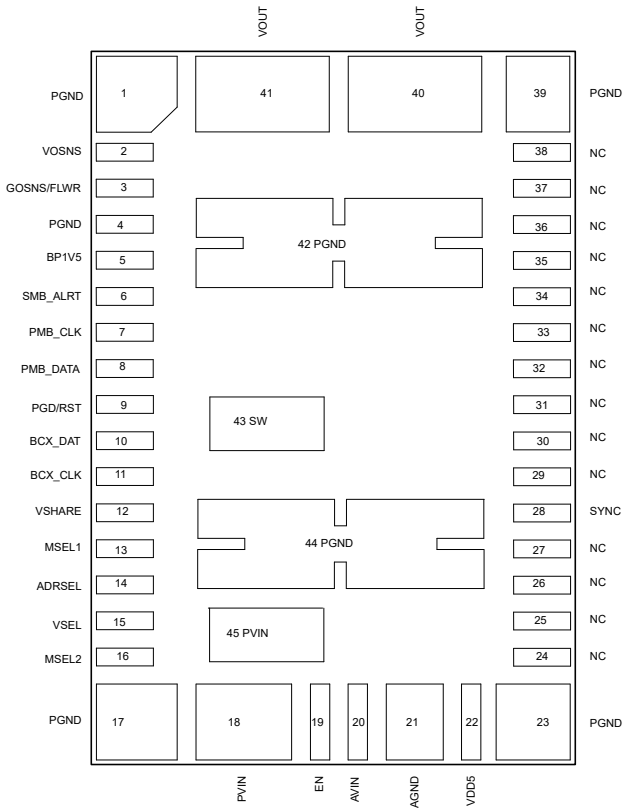

Figure 4-1. 45-Pin QFM-MOY Package (Top View)

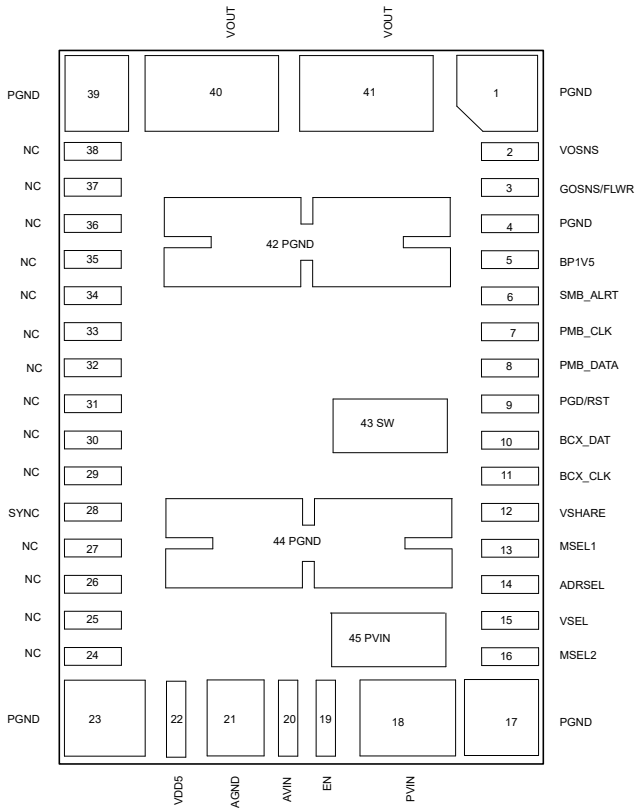

Figure 4-2. 45-Pin QFM-MOY Package (Bottom View)

Table 4-1. Pin Functions

PIN		TYPE[1]	DESCRIPTION
NAME	NO.		
PGND	1, 4, 17, 23, 39, 42, 44	—	Power stage ground return. Pins 42 and 44 also act as the thermal pad of the device.
VOSNS	2	I	The positive input of the remote sense amplifier. For a standalone device or a loop controller device in a multi-phase configuration, connect the VOSNS pin to the output voltage at the load. For the loop follower device in a multi-phase configuration, the remote sense amplifier is not required for output voltage sensing or regulation and this pin can be left floating. If used to monitor another voltage with the Phased *READ_VOUT* command, VOSNS must be maintained between 0V and 0.75V with a < 1kΩ resistor divider due to the internal resistance to GOSNS, which is connected to BP1V5.
GOSNS/FLWR	3	I	The negative input of the remote sense amplifier for a loop controller device or pull up high to indicate loop follower. For a standalone device or a loop controller device in a multi-phase configuration, connect the GOSNS pin to the ground at the load. For the loop follower device in a multi-phase configuration, the GOSNS pin must be pulled up to BP1V5 to indicate the device is a loop follower.
BP1V5	5	O	Output of the 1.5V internal regulator for MSEL,VSEL, and ADRSEL pins. No external bypassing required. Not designed to power other circuits.
SMB_ALRT	6	O	SMBus alert pin. See SMBus specification.
PMB_CLK	7	I	PMBus CLK pin. See the *Current PMBus Specifications*.
PMB_DATA	8	I/O	PMBus DATA pin. See the *Current PMBus Specifications*.

Table 4-1. Pin Functions (continued)

PIN		TYPE(1)	DESCRIPTION
NAME	NO.		
PGD/RST	9	I/O	Open-drain power good or *(21h) VOUT_COMMAND* RESET#. As determined by user-programmable RESET# bit in *(EDh) MFR_SPECIFIC_29 (MISC_OPTIONS)*. The default pin function is an open-drain power-good indicator. When configured as RESET#, an internal pullup can be enabled or disabled by the PULLUP# bit in *(EDh) MFR_SPECIFIC_29 (MISC_OPTIONS)*.
BCX_DATA	10	I/O	Data for back-channel communications between stacked devices
BCX_CLK	11	I/O	Clock for back-channel communications between stacked devices
VSHARE	12	I/O	Voltage sharing signal for multi-phase operation. For a standalone device, the VSHARE pin must be left floating. VSHARE can be bypassed to AGND with up to 50pF of capacitance.
MSEL1	13	I	Connect this pin to a 1% tolerance or better resistor divider between BP1V5and AGND for different options of switching frequency and internal compensation parameters. See *Programming MSEL1*.
ADRSEL	14	I	Connect this pin to a 1% tolerance or better resistor divider between BP1V5 and AGND for different options of PMBus addresses and frequency sync (including determination of SYNC pin as SYNCIN or SYNCOUT function). See *Programming ADRSEL*.
VSEL	15	I	Connect this pin to a 1% tolerence or better resistor divider between BP1V5 and AGND for different options of internal voltage feedback dividers and default output voltage. See *Programming VSEL*.
MSEL2	16	I	Connect this pin to a 1% tolerence or better resistor divider between BP1V5 and AGND for different options of soft-start time, overcurrent fault limit, and multiphase information. See *Programming MSEL2* or *Programming MSEL2 for a Loop Follower Device (GOSNS Tied to BP1V5)* for a loop follower device GOSNS tied to BP1V5.
EN/UVLO	19	I	Enable switching as the PMBus CONTROL pin. EN/UVLO can also be connected to a resistor divider to program input voltage UVLO.
PVIN	18,45	I	Input power to the power stage. Low-impedance bypassing of these pins to PGND is critical. PVIN to PGND must be bypassed with X5R or better ceramic capacitors rated for at least 1.5 × the maximum PVIN voltage.
AVIN	20	I	Input power to the controller
AGND	21	—	Analog ground return for controller. Connect the AGND pin directly to the thermal pad on the PCB board.
VDD5	22	O	Output of the 5V internal regulator. A bypassing capacitor is integrated and no external bypassing is required.
SYNC	28	I/O	For frequency synchronization, this pin can be programmed as SYNC IN or SYNC OUT pin by the ADRSEL pin or the *(E4h) MFR_SPECIFIC_20 (SYNC_CONFIG)* PMBus command. SYNC pin can be left floating when not used.
VOUT	40, 41	O	Output of power module. Connect to output bypass capacitors to this pin.
Thermal Pad	42, 44	—	The thermal pad is the PGND pin made with a large area of copper to improve thermal conductivity to PCB. The thermal pad must have adequate solder coverage for best thermal performance.
SW	43	I/O	Switched power output of the device. Connect the output averaging filter and bootstrap to this group of pins if needed.
NC	24, 25, 26, 27, 29, 30, 31, 32, 33, 34, 35, 36, 37, 38	—	No connection

(1) I = input, O = output

Copyright © 2024 Texas Instruments Incorporated

5 Specifications

5.1 Absolute Maximum Ratings

over operating free-air temperature range (unless otherwise noted) (1)

		MIN	MAX	UNIT
Input voltage	AVIN	–0.3	18	V
	PVIN	–0.3	16	
	PVIN_A, PVIN_B, < 2ms transient	–0.3	19	
	EN/UVLO, VOSNS, SYNC, VSEL, MSEL1, MSEL2, ADRSEL	–0.3	5.5	
	VSHARE, GOSNS/LOOP FLWR	–0.3	1.98	
	PMB_CLK, PMB_DATA, BCX_CLK, BCX_DAT	–0.3	5.5	
	VDD5 external bias range	4.25	5.25	
Output voltage	VOUT	0.5	5.5	V
	VDD5, SMB_ALRT, PGD/RST	–0.3	5.5	
	BP1V5	–0.3	1.65	
T_J operating junction temperature		–40	150	°C
T_{stg} storage temperature		–55	150	°C

(1) Operation outside the *Absolute Maximum Ratings* may cause permanent device damage. *Absolute Maximum Ratings* do not imply functional operation of the device at these or any other conditions beyond those listed under *Recommended Operating Conditions*. If used outside the *Recommended Operating Conditions* but within the *Absolute Maximum Ratings*, the device may not be fully functional, and this may affect device reliability, functionality, performance, and shorten the device lifetime.

5.2 ESD Ratings

			VALUE	UNIT
$V_{(ESD)}$	Electrostatic discharge	Human-body model (HBM), per ANSI/ESDA/JEDEC JS-001(1)	±2000	V
		Charged device model (CDM), per ANSI/ESDA/JEDEC JS-002(2)	±1500	

(1) JEDEC document JEP155 states that 500V HBM allows safe manufacturing with a standard ESD control process.
(2) JEDEC document JEP157 states that 250V CDM allows safe manufacturing with a standard ESD control process.

5.3 Recommended Operating Conditions

over operating free-air temperature range (unless otherwise noted)

		MIN	NOM	MAX	UNIT
V_{AVIN}	Controller input voltage with Internal LDO	4.25	12	18	V
V_{AVIN}	Controller input voltage with valid external bias applied to VDD5	2.95	12	18	V
V_{PVIN}	Power stage input voltage with Internal LDO	4.25	12	16	V
V_{PVIN}	Power stage input voltage with valid external bias applied to VDD5	2.95	12	16	V
V_{OUT}	Output voltage range	0.5		5.5	V
$IOUT_{MAX}$	Maximum continuous output current per module			25	A
Phase	Maximum number of stackable phases			4	
T_J	Junction temperature	–40		125	°C
T_A	Ambient temperature	–40		105	°C

Copyright © 2024 Texas Instruments Incorporated

5.4 Thermal Information

THERMAL METRIC(1)		TPSM8S6B24S QFM (MOW) 59 PINS	UNIT
$R_{\theta JA}$	Junction-to-ambient thermal resistance	12.6	°C/W
ψ_{JT}	Junction-to-top characterization parameter	0.78	°C/W
ψ_{JB}	Junction-to-board characterization parameter	9.8	°C/W

(1) For more information about traditional and new thermal metrics, see the *Semiconductor and IC Package Thermal Metrics* application report.

5.5 Electrical Characteristics

T_J = –40°C to 125°C, V_{PVIN} = V_{AVIN}= 12V, f_{SW} = 550kHz; zero power dissipation (unless otherwise noted)

PARAMETER		TEST CONDITIONS		MIN	TYP	MAX	UNIT
INPUT SUPPLY							
V_{AVIN}	Input supply voltage range	Controller input voltage with internal LDO		4.25		18	V
V_{AVIN}	Input supply voltage range	Controller input voltage with valid external bias		2.95		18	
V_{PVIN}	Power stage voltage range	Power stage input voltage with internal LDO		4.25		16	
V_{PVIN}	Power stage voltage range	Power stage input voltage with valid external bias		2.95		16	
I_{AVIN}	Input operating current	Converter not switching, each phase			12.5	17	mA
AVIN UVLO							
$V_{AVINuvlo}$	Analog input voltage UVLO for power on reset (PMBus communication)	Enable threshold			2.5	2.7	V
	Analog input voltage UVLO for disable			2.09	2.3		V
	Analog input voltage UVLO hysteresis				250		mV
$t_{delay(uvlo_PMBus)}$	Delay from AVIN UVLO to PMBus ready to communicate	AVIN = 3 V			8		ms
PVIN UVLO							
VIN_ON	Power input turn-on voltage	Factory default setting			2.75		V
		Programmable range		2.75		15.75	
		Resolution			0.25		
		Accuracy		–5%		5%	
VIN_OFF	Power input turn-off voltage	Factory default setting			2.5		V
		Programmable range		2.5		15.5	
		Resolution			0.25		
		Accuracy		–5%		5%	
ENABLE AND UVLO							
V_{ENuvlo}	EN/UVLO voltage rising threshold				1.05	1.1	V
	EN/UVLO voltage falling threshold			0.9			
V_{ENhys}	EN/UVLO voltage hysteresis	No external resistors on EN/UVLO			70		mV
I_{ENhys}		$V_{EN/UVLO}$ = 1.1V		4.5	5.5	6.5	uA
		$V_{EN/UVLO}$ = 0.9V			-100	-5	nA
REMOTE SENSE AMPLIFIER							
Z_{RSA}	Remote sense input impedance	VOSNS – GOSNS = 1V	VOSNS to GOSNS	85	130	165	kΩ

Copyright © 2024 Texas Instruments Incorporated

5.5 Electrical Characteristics (continued)

T_J = –40°C to 125°C, V_{PVIN} = V_{AVIN}= 12V, f_{SW} = 550kHz; zero power dissipation (unless otherwise noted)

PARAMETER		TEST CONDITIONS		MIN	TYP	MAX	UNIT
$V_{IRNG(GOSNS)}$	GOSNS input range for regulation accuracy (1)	VOSNS – GOSNS = 1V, VOUT_SCALE_LOOP ≤ 0.5		–0.05		0.05	V
$V_{IRNG(VOSNS)}$	VOSNS input range for regulation accuracy (1)	GOSNS = AGND, VOUT_SCALE_LOOP ≤ 0.5		–0.1		5.5	V
REFERENCE VOLTAGE AND ERROR AMPLIFIER							
V_{REF}	Reference voltage(1)	Default setting			0.4		V
		Reference voltage range(1)		0.25		0.75	V
		Reference voltage resolution(1)			2^{-12}		V
$V_{OUT(ACC)}$	Output voltage accuracy	V_{OUT} = 1000mV	–40°C ≤ T_J ≤ 150°C(2)	0.992		1.008	V
		V_{OUT} = 500mV		0.492		0.508	V
		V_{OUT} = 1500mV		1.490		1.510	V
		V_{OUT} = 1000mV	0°C ≤ T_J ≤ 125°C(2)	0.994		1.006	V
		V_{OUT} = 500mV		0.494		0.506	V
		V_{OUT} = 1500mV		1.492		1.508	V
		V_{OUT} = 1000mV	0°C ≤ T_J ≤ 85°C(2)	0.995		1.005	V
		V_{OUT} = 500mV		0.495		0.505	V
		V_{OUT} = 1500mV		1.493		1.507	V
G_{mEA}	Programmable error amplifier transonductance			25		200	µS
	Resolution(1)	Four settings: 25µS, 50µS, 100µS, 200µS			25		
	Unloaded bandwidth(1)				8		MHz
R_{pEA}	Programmable parallel resistor range			5		315	kΩ
	Resolution(1)				5		
C_{intEA}	Programmable integrator capacitor range			1.25		18.75	pF
	Resolution(1)				1.25		pF
C_{pEA}	Programmable parallel capacitor range			6.25		193.75	pF
	Resolution(1)				6.25		
CURRENT GM AMPLIFIER							
G_{mBUF}	Programmable current error amplifier transonductance			25		200	µS
	Resolution(1)	Four settings: 25µS, 50µS, 100µS, 200µS			25		
	Unloaded bandwidth(1)				17		MHz
R_{pBUF}	Programmable parallel resistor range			5		315	kΩ
	Resolution(1)				5		
R_{intBUF}	Programmable integrator resistor range(1)			800		1600	kΩ
	Resolution(1)				800		
C_{intBUF}	Programmable integrator capacitor range			0.3125		4.6875	pF
	Resolution(1)				0.3125		
C_{pBUF}	Programmable parallel capacitor range			3.125		96.875	pF
	Resolution(1)				3.125		

Copyright © 2024 Texas Instruments Incorporated

5.5 Electrical Characteristics (continued)

T_J = –40°C to 125°C, V_{PVIN} = V_{AVIN}= 12V, f_{SW} = 550kHz; zero power dissipation (unless otherwise noted)

PARAMETER		TEST CONDITIONS		MIN	TYP	MAX	UNIT
OSCILLATOR							
f_{SW}	Adjustment range[2]			275		1100	kHz
	Switching frequency[2]			500	550	600	
SYNCHRONIZATION							
$V_{IH(sync)}$	High-level input voltage			1.35			V
$V_{IL(sync)}$	Low-level input voltage					0.8	
$t_{pw(sync)}$	Sync input minimum pulse width					200	ns
Δf_{SYNC}	SYNC pin frequency range from FREQUENCY_SWITCH frequency[1]			–20%		20%	
$V_{OH(sync)}$	Sync output high voltage	100µA load		VDD5 -0.85V		VDD5	V
$V_{OL(sync)}$	Sync output low voltage	2.4mA load				0.4	V
t_{PLL}	PLL lock time	F_{sw} = 550kHz, SYNC clock frequency 495kHz–605kHz[1]				65	µs
PhaseErr	Phase interleaving error[5]	f_{sw} < 1.1MHz				9	Degree
		f_{sw} ≥1.1MHz				23	ns
RESET							
$V_{IH(reset)}$	High-level input voltage[1]			1.35			V
$V_{IL(reset)}$	Low-level input voltage					0.8	
$t_{pw(reset)}$	Minimum RESET_B pulse width					200	ns
$R_{pullup(reset)}$	Internal pullup resistance	V_{RESET} = 0.8V	RESET# = 1	25	34	55	kΩ
$V_{pullup(reset)}$	Internal pullup voltage	I_{RESET} = 10µA	RESET# = 1			VDD5 – 0.5	V
VDD5 REGULATOR							
V_{VDD5}	Regulator output voltage	Default, I_{VDD5} = 10mA		4.5	4.7	4.9	V
	Programmable range[1]			3.9		5.3	V
	Resolution				200		mV
$V_{VDD5(do)}$	Regulator dropout voltage	V_{AVIN} – V_{VDD5}, V_{AVIN} = 4.5 V, I_{VDD5} = 25mA			130	285	mV
$V_{VDD5ON(IF)}$	Enable voltage on VDD5 for pin-strapping				2.62	2.85	V
$V_{VDD5OFF(IF)}$	Disable voltage on VDD5 for pin-strapping			2.25	2.48		V
$V_{VDD5ON(SW)}$	Switching enable voltage upon VDD5					4.05	V
$V_{VDD5OFF(SW)}$	Switching disable voltage upon VDD5			3.10			V
$V_{VDD5UV(hyst)}$	Regulator UVLO voltage hysteresis			400			mV
$V_{BOOT(drop)}$	Bootstrap voltage drop	I_{BOOT} = 20mA, VDD5 = 4.5V				225	mV
BP1V5 REGULATOR							
V_{BP1V5}	1.5V regulator output voltage	V_{AVIN} ≥ 4.5V, I_{BP1V5} = 5mA		1.42	1.5	1.58	V
$I_{BP1V5SC}$	1.5V regulator short-circuit current[1]			30			mA
PWM							

Copyright © 2024 Texas Instruments Incorporated

5.5 Electrical Characteristics (continued)

T_J = –40°C to 125°C, V_{PVIN} = V_{AVIN}= 12V, f_{SW} = 550kHz; zero power dissipation (unless otherwise noted)

PARAMETER		TEST CONDITIONS	MIN	TYP	MAX	UNIT
$t_{ON(min)}$	Minimum controllable pulse width(1)				20	ns
$t_{OFF(min)}$	PWM Minimum off time(1)			400	500	ns
SOFT START						
t_{ON_RISE}	Soft-start time	Factory default setting		3		ms
		Programmable range(1) (3)	0		31.75	
		Resolution		0.25		
		Accuracy, TON_RISE = 3ms	–10%		15%	
$t_{ON_MAX_FLT_LT}$	Upper limit on the time to power up the output	Factory default setting(4)		0		ms
		Programmable range(1) (4)	0		127.5	
		Resolution		0.5		
		Accuracy(1)	–10%		15%	
t_{ON_DELAY}	Turn-on delay	Factory default setting		0		ms
		Programmable range(1)	0		127.5	
		Resolution		0.5		
		Accuracy(1)	–10%		15%	
SOFT STOP						
t_{OFF_FALL}	Soft-stop time	Factory default setting(3)		0.5		ms
		Programmable range(1) (3)	0		31.75	
		Resolution		0.25		
		Accuracy, TOFF_FALL = 1ms	–10%		15%	
t_{OFF_DELAY}	Turn-off delay	Factory default setting		0		ms
		Programmable range(1)	0		127.5	
		Resolution		0.5		
		Accuracy(1)	–10%		15%	
POWER STAGE						
R_{HS}	High-side power device on-resistance	V_{BOOT} - V_{SW} = 4.5V, T_J = 25°C		4.5		mΩ
R_{LS}	Low-side power device on-resistance	V_{VDD5} = 4.5V, T_J = 25°C		0.9		mΩ
R_{swpd}	SW internal pulldown resistance		3	30	35	kΩ
$V_{wkdr(on)}$	Weak high-side gate drive triggering threshold upon PVIN rising			14.75		V
$V_{wkdr(off)}$	Weak high-side gate drive recovering threshold upon PVIN falling			14.35		V
$t_{DEAD(LtoH)}$	Power stage driver dead-time from low-side off to high-side on	V_{VDD5} = 4.5V, T_J = 25°C(1)		6		ns
$t_{DEAD(HtoL)}$	Power stage driver dead-time from high-side off to low-side on	V_{VDD5} = 4.5V, T_J = 25°C(1)		6		ns
CURRENT SHARING						

Copyright © 2024 Texas Instruments Incorporated

5.5 Electrical Characteristics (continued)

T_J = –40°C to 125°C, V_{PVIN} = V_{AVIN}= 12V, f_{SW} = 550kHz; zero power dissipation (unless otherwise noted)

PARAMETER		TEST CONDITIONS	MIN	TYP	MAX	UNIT
$I_{SHARE(acc)}$	Output current sharing accuracy of two devices defined as the ratio of the current difference between two devices to the sum of the two	I_{OUT} ≥ 10A per device(5)	–10%		10%	A
	Output current sharing accuracy of two devices defined as the current difference between each device and the average of all devices	I_{OUT} < 10A per device(5)	–1		1	A
V_{VSHARE}	VSHARE fault trip threshold			0.1		V
	VSHARE fault release threshold			0.2		
LOW-SIDE CURRENT LIMIT PROTECTION						
$t_{OFF(OC)}$	Off time between restart attempts(1)	Factory default setting		7 × t_{ON_RISE}		ms
	Range		1 × t_{ON_RISE}		7 × t_{ON_RISE}	
IO_OC_FLT_LMT	Output current overcurrent fault threshold	Factory default setting		52		A
		Programmable range	8		62	
		Resolution		2		
I_{NEGOC}	Negative output current overcurrent protection threshold			–20		
$I_{OC(acc)}$	Output current overcurrent fault error	I_{OUT} = 20A	–2		4	A
$I_{OC(acc)}$	Output current overcurrent fault error	I_{OUT} = 25A(5)	–4		8	A
I_{HSOC}	Output current overcurrent fault accuracy	I_{OUT} = 10A	–1		2	A
I_{HSOC}	Output current overcurrent fault accuracy	I_{OUT} = 20A(5)	–2		4	A
HIGH-SIDE SHORT CIRCUIT PROTECTION						
I_{HSOC}	Ratio of high-side short-circuit protection fault threshold over low-side overcurrent limit	T_J = 25°C(5)	105%	150%	200%	
	High-side current sense blanking time			100		ns
POWER GOOD (PGOOD) AND OVERVOLTAGE/UNDERVOLTAGE WARNING						
R_{PGD}	PGD pulldown resistance	I_{PGD} = 5mA		30	50	Ω
$I_{PGD(OH)}$	Output high open drain leakage current into PGD pin	V_{PGD} = 5V			15	µA
$V_{PGD(OL)}$	PGD pin output low level voltage at no supply voltage	V_{AVIN} = 0, I_{PGD} = 80µA			0.8	V

Copyright © 2024 Texas Instruments Incorporated

5.5 Electrical Characteristics (continued)

T_J = –40°C to 125°C, V_{PVIN} = V_{AVIN}= 12V, f_{SW} = 550kHz; zero power dissipation (unless otherwise noted)

PARAMETER		TEST CONDITIONS		MIN	TYP	MAX	UNIT
V_{OVW}	Overvoltage warning threshold (PGD threshold on VOSNS rising)	Factory default, at VOUT_COMMAND (VOC) = 1V		106%	110%	114%	VOC
	Range			103%		116%	
	Resolution				1%		
V_{UVW}	Undervoltage warning threshold (PGD threshold on VOSNS falling)	Factory default, at VOUT_COMMAND (VOC) = 1V		86%	90%	94%	
	Range			84%		97%	
	Resolution				1%		
$V_{PGD(rise)}$	PGD release threshold on VOSNS rising and undervoltage warning de-assertion threshold	Factory default, at VOUT_COMMAND (VOC) = 1V			95%		
$V_{PGD(fall)}$	PGD threshold on VOSNS falling and overvoltage warning de-assertion threshold	Factory default, at VOUT_COMMAND (VOC) = 1V			105%		
OUTPUT OVERVOLTAGE AND UNDERVOLTAGE FAULT PROTECTION							
V_{OVF}	Overvoltage fault threshold	Factory default, at VOUT_COMMAND (VOC) = 1V	Factory default, at VOUT_COMMAND (VOC) = 1V	111%	115%	119%	VOC
	Range	Factory default, at VOUT_COMMAND (VOC) = 1V	Factory default, at VOUT_COMMAND (VOC) = 1V	105%		140%	
	Resolution	Factory default, at VOUT_COMMAND (VOC) = 1V	Factory default, at VOUT_COMMAND (VOC) = 1V		2.5%		
V_{UVF}	Undervoltage fault threshold	Factory default, at VOUT_COMMAND (VOC) = 1V	Factory default, at VOUT_COMMAND = 1.00V	81%	85%	89%	
	Range	Factory default, at VOUT_COMMAND = 1.00V	Factory default, at VOUT_COMMAND = 1.00V	60%		95%	
	Resolution	Factory default, at VOUT_COMMAND = 1.00V	Factory default, at VOUT_COMMAND = 1.00V		2.5%		
$V_{OVF(fix)OFF}$	Fixed overvoltage fault threshold	Factory default, at VOUT_COMMAND (VOC) = 1V	Factory default, at VOUT_COMMAND = 1.00V	1.15	1.2	1.25	V
	Recovery threshold(1)	Factory default, at VOUT_COMMAND = 1.00V	Factory default, at VOUT_COMMAND = 1.00V		0.4		
OUTPUT VOLTAGE TRIMMING							
V_{OUTRES}		Default resolution of VOUT_COMMAND, trim and margin, VOUT_SCALE_LOOP = 0.5		1.90	1.95	2.00	mV
		Programmable range(1)		2^{-12}		2^{-5}	V
VOUT_TRAN_RT	Output voltage transition rate	Factory default setting			1		mV/µs
		Programmable range(1)		0.063		15.933	
		Accuracy		–10%		10%	
VOUT_SCL_LP	Feedback loop scaling factor(1)	Factory default setting			0.5		
		Programmable range, four discrete settings		0.125		1	

Copyright © 2024 Texas Instruments Incorporated

5.5 Electrical Characteristics (continued)

T_J = –40°C to 125°C, V_{PVIN} = V_{AVIN}= 12V, f_{SW} = 550kHz; zero power dissipation (unless otherwise noted)

PARAMETER		TEST CONDITIONS		MIN	TYP	MAX	UNIT
VOUT_CMD	Output voltage programmable values	Factory default setting			0.8		V
		Programmable range	VOUT_SCALE_LOOP = 1 (5)	0.25		0.75	V
			VOUT_SCALE_LOOP = 0.5	0.25		1.5	
			VOUT_SCALE_LOOP = 0.25(5)	0.25		3	
			VOUT_SCALE_LOOP = 0.125(5)	0.25		3.6	
TEMPERATURE SENSE AND THERMAL SHUTDOWN							
T_{SD}	Bandgap thermal shutdown temperature(1)			150	170		°C
T_{HYST}	Bandgap thermal shutdown hysteresis(1)					25	
OT_FLT_LMT	Internal overtemperature fault limit(1)	Factory default setting			150		
		Programmable range		0		160	
		Resolution			1		
OT_WRN_LMT	Internal overtemperature warning limit(1)	Factory default setting			125		
		Programmable range		0		160	
		Resolution			1		
$T_{OT(hys)}$	Internal overtemperature fault, warning hysteresis(1)	Factory default setting				25	
MEASUREMENT SYSTEM							
$M_{VOUT(rng)}$	Output voltage measurement range(1)			0		6	V
$M_{VOUT(acc)}$	Output voltage measurement accuracy	250mV < V_{OUT} < 6V		–2%		2%	
$M_{VOUT(lsb)}$	Output voltage measurement bit resolution(1)				244		µV
$M_{IOUT(rng)}$	Output current measurement range(1)			–5		30	A
$M_{IOUT(acc)}$	Output current measurement accuracy(5)	I_{OUT} ≤ 5A, T_J = 25°C		–1	0	1	A
$M_{IOUT(acc)}$	Output current measurement accuracy(5)	I_{OUT} = 10A, –40°C ≤ T_J ≤ 150°C		–1.5	0	1.5	A
$M_{IOUT(acc)}$	Output current measurement accuracy(5)	I_{OUT} = 20A, –40°C ≤ T_J ≤ 150°C		–2	0	2	A
$M_{IOUT(acc)}$	Output current measurement accuracy(5)	I_{OUT} = 10A, 0°C ≤ T_J ≤ 85°C		–1.3	0	1.3	A
$M_{IOUT(acc)}$	Output current measurement accuracy(5)	I_{OUT} = 20A, 0°C ≤ T_J ≤ 85°C		–1.5	0	1.5	A
$M_{IOUT(lsb)}$	Output current measurement bit resolution(1)				2^{-6}		A
$M_{PVIN(rng)}$	Input voltage measurement range(1)			0		20	V
$M_{PVIN(acc)}$	Input voltage measurement accuracy	4V< PVIN < 20V		–3%		3%	
$M_{TSNS(acc)}$	Internal temperature sense accuracy(5)	–40°C ≤ T_J ≤ 150°C		–3		3	°C
$M_{TSNS(lsb)}$	Internal temperature sense bit resolution(1)				0.25		
PMBUS INTERFACE + BCX							

Copyright © 2024 Texas Instruments Incorporated

5.5 Electrical Characteristics (continued)

T_J = –40°C to 125°C, V_{PVIN} = V_{AVIN}= 12V, f_{SW} = 550kHz; zero power dissipation (unless otherwise noted)

PARAMETER		TEST CONDITIONS	MIN	TYP	MAX	UNIT
$V_{IH(PMBUS)}$	High-level input voltage on PMB_CLK, PMB_DATA, BCX_CLK, BCX_DAT		1.35			V
$V_{IL(PMBUS)}$	Low-level input voltage on PMB_CLK, PMB_DATA, BCX_CLK, BCX_DAT				0.8	
$I_{IH(PMBUS)}$	Input high level current into PMB_CLK, PMB_DATA		–10		10	µA
$I_{IL(PMBUS)}$	Input low level current into PMB_CLK, PMB_DATA		–10		10	µA
$V_{OL(PMBUS)}$	Output low level voltage on PMB_DATA, SMB_ALRT, BCX_DAT	V_{AVIN} > 4.5V, input current to PMB_DATA, SMB_ALRT, BCX_DAT = 20mA			0.4	V
$I_{OH(PMBUS)}$	Output high level open-drain leakage current into PMB_DATA, SMB_ALRT	Voltage on PMB_DATA, SMB_ALRT = 5.5V			10	µA
$I_{OL(PMBUS)}$	Output low level open-drain sinking current on PMB_DATA, SMB_ALRT, BCX_DAT	Voltage on PMB_DATA, SMB_ALRT, BCX_DAT = 0.4V	20			mA
f_{PMBUS_CLK}	PMBus operating frequency range	GOSNS = AGND	10		1000	kHz
C_{PMBUS}	PMBUS_CLK and PMBUS_DATA pin input capacitance(1)	V_{pin} = 0.1V to 1.35V			5	pF
N_{WR_NVM}	Number of NVM writable cycles(1)	–40°C to 150°C	1000			cycle
$t_{CLK_STCH(max)}$	Maximum allowable clock stretch(1)				6	ms

(1) Specified by design. Not production tested.
(2) The parameter covers 2.95V to 18V of AVIN.
(3) The setting of TON_RISE and TOFF_FALL of 0ms means the unit to bring its output voltage to the programmed regulation value of down to 0 as quickly as possible, which results in an effective TON_RISE and TOFF_FALL time of 0.5ms (fastest time supported).
(4) The setting of TON_MAX_FAULT_LIMIT and TOFF_MAX_WARN_LIMIT of 0 means disabling TON_MAX_FAULT and TOFF_MAX_WARN response and reporting completely.
(5) Not production tested.

Copyright © 2024 Texas Instruments Incorporated

5.6 Typical Characteristics

V_{PIN} = V_{AVIN} = 12V, T_A = 25°C, f_{sw} = 650kHz (unless otherwise specified).

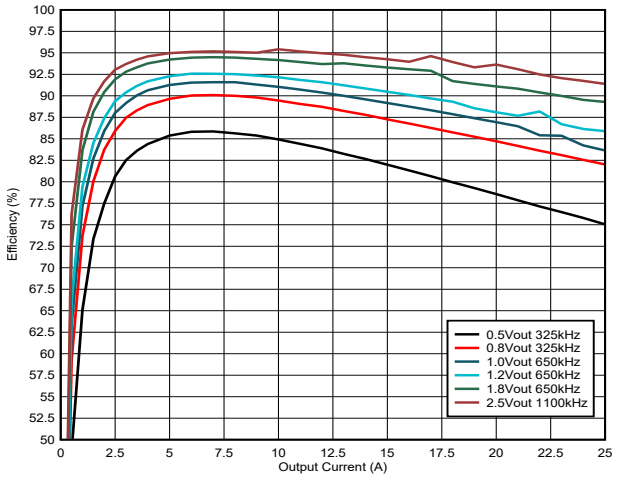

V_{IN} = 5V V_{CC} = Internal

Figure 5-1. TPSM8S6B24S Efficiency vs Output Current

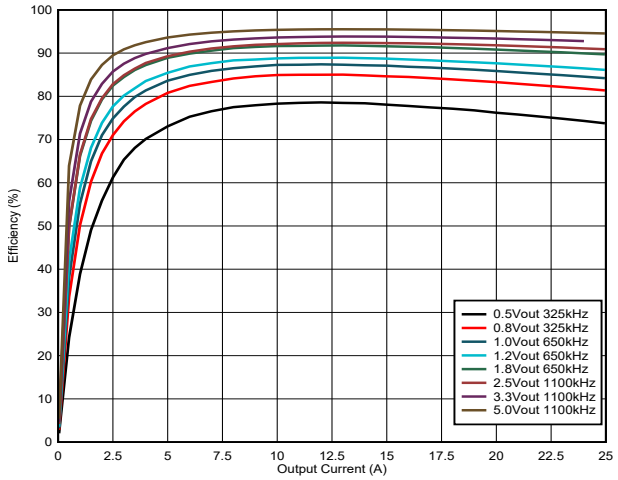

V_{IN} = 12V V_{CC} = Internal

Figure 5-2. TPSM8S6B24S Efficiency vs Output Current

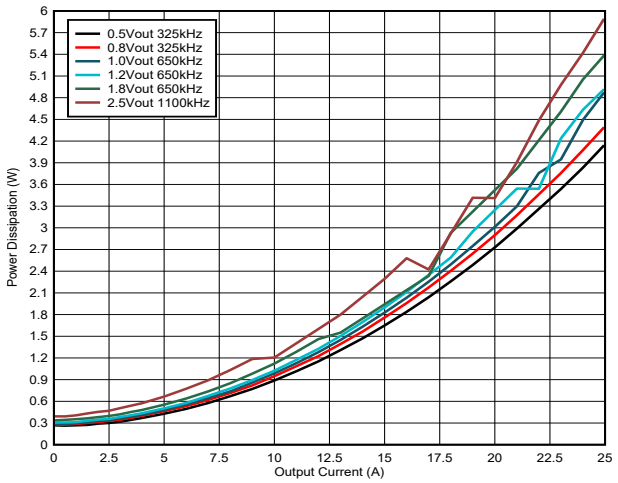

V_{IN} = 5V V_{CC} = Internal

Figure 5-3. TPSM8S6B24S Power Dissipation vs Output Current

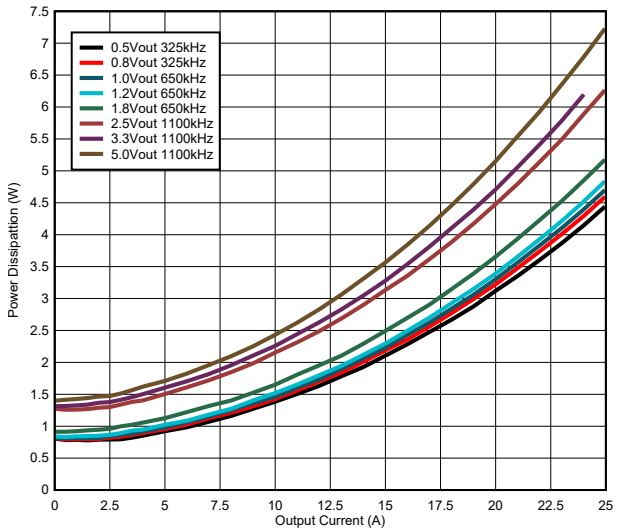

V_{IN} = 12V V_{CC} = Internal

Figure 5-4. TPSM8S6B24S Power Dissipation vs Output Current

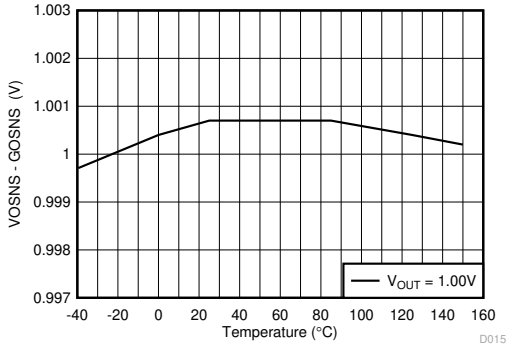

VOUT_COMMAND = 1V

Figure 5-5. Output Voltage vs Junction Temperature

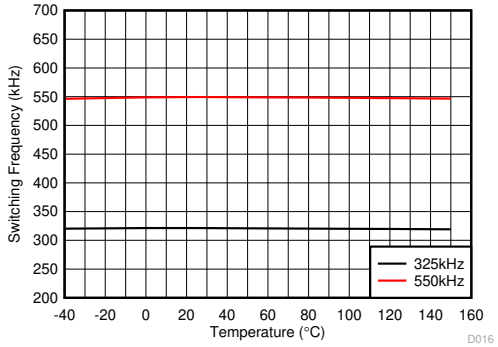

Figure 5-6. Switching Frequency vs Junction Temperature

Copyright © 2024 Texas Instruments Incorporated

5.6 Typical Characteristics (continued)

V_{PIN} = V_{AVIN} = 12V, T_A = 25°C, f_{sw} = 650kHz (unless otherwise specified).

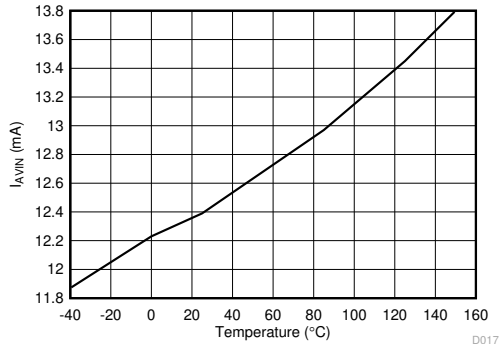

Figure 5-7. Nonswitching Input Current (I_{AVIN}) vs Junction Temperature

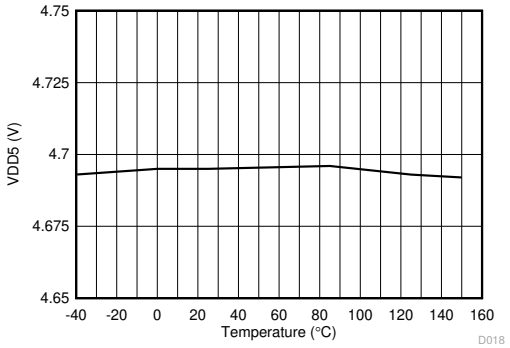

I_{VDD5} = 10mA V_{PVIN} = V_{AVIN} = 12V

Figure 5-8. VDD5 Voltage vs Junction Temperature

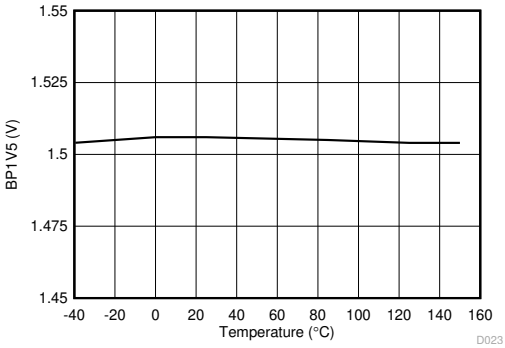

I_{BP1V5} = 2mA V_{PVIN} = V_{AVIN}= 12V

Figure 5-9. BP1V5 Voltage vs Junction Temperature

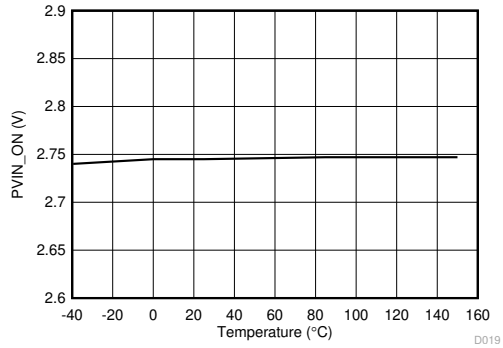

(35h) VIN_ON = 2.75V

Figure 5-10. Turn-On Voltage vs Junction Temperature

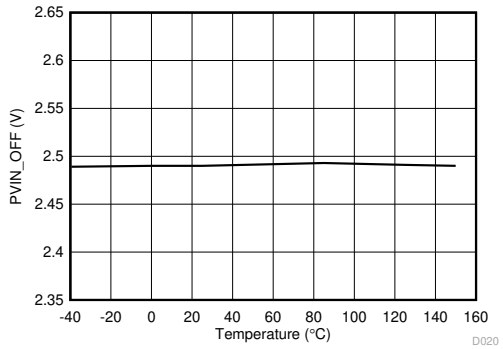

(36h) VIN_OFF = 2.5V

Figure 5-11. Turn-Off Voltage vs Junction Temperature

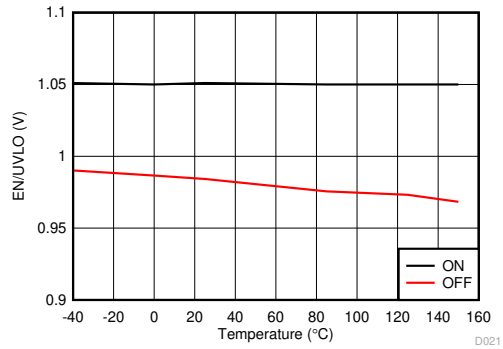

Figure 5-12. EN/UVLO Thresholds vs Junction Temperature

Copyright © 2024 Texas Instruments Incorporated

6 Detailed Description

6.1 Overview

The TPSM8S6B24S power module uses a fixed-frequency, proprietary current-mode control. The switching frequency can be selected from preset values through pinstrapping or PMBus programming. The output voltage is sensed through a true differential remote sense amplifier and internal resistor divider, then compared to an internal voltage reference by an error amplifier. An internal oscillator initiates the turn-on of the high-side power switch. The error amplifier output is buffered and shared through VSHARE among stacked devices. This shared voltage is compared to the sensed switch node current to drive a linear voltage ramp modulator with input voltage, output voltage, and switching frequency feedforward to regulate the average switch-node current. As a synchronous buck converter, the device normally works in continuous conduction mode (CCM) under all load conditions. The compensation components are integrated and programmable through the PMBus command *(B1h) USER_DATA_01 (COMPENSATION_CONFIG)* or with the external pin MSEL1 to select preset values based on switching frequency and output LC filters.

6.2 Functional Block Diagram

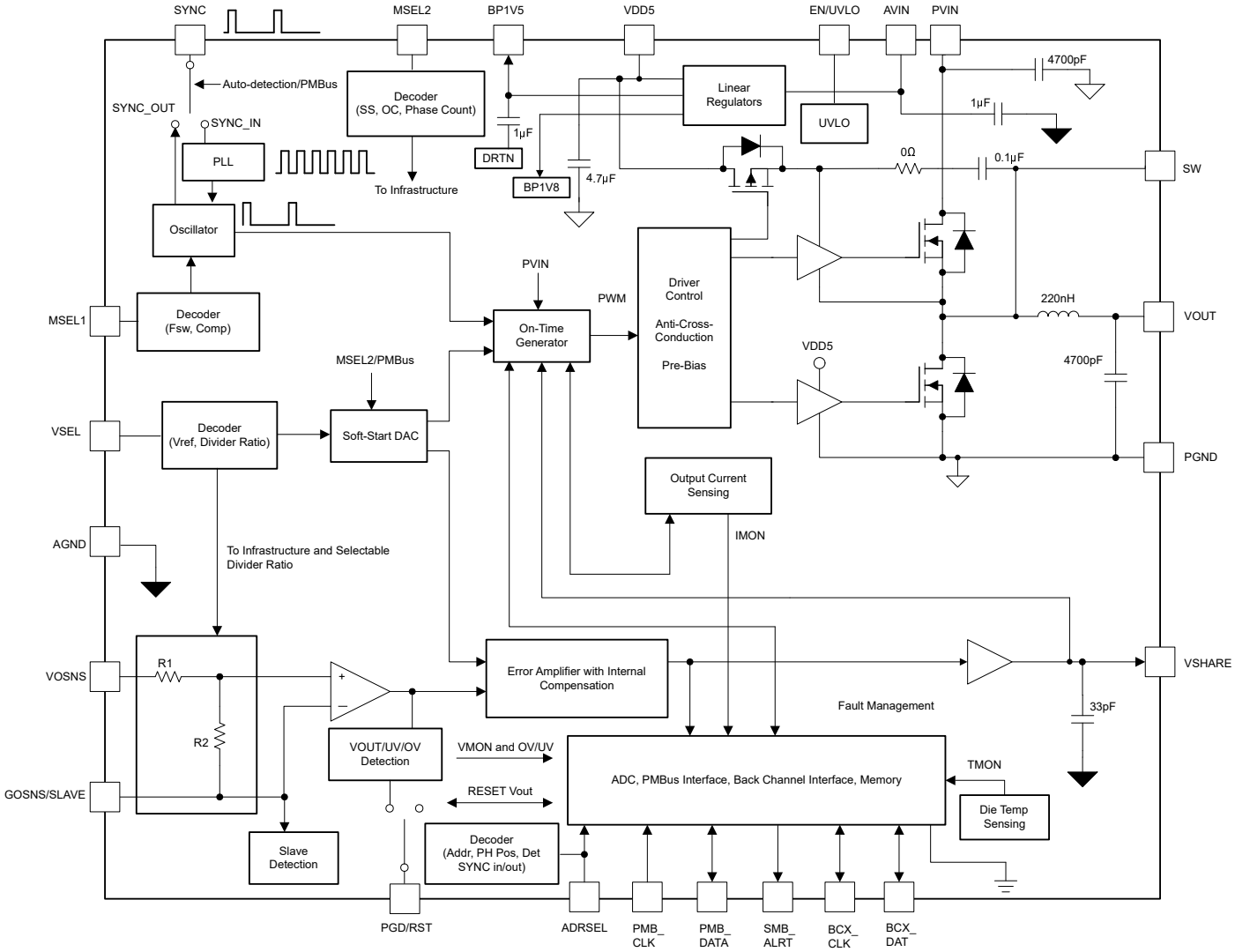

Copyright © 2024 Texas Instruments Incorporated

6.3 Feature Description

6.3.1 Average Current-Mode Control

The TPSM8S6B24S device uses an average current-mode control architecture with independently programmable current error integration and voltage error integration loops. This architecture provides similar performance to peak current-mode control without restricting the minimum on time or minimum off time control, allowing the gain selection of the current loop to effectively set the slope compensation. For help selecting compensation values, customers can use the *TPSM8S6x24 Compensation and Pin-Strap Resistor Calculator* design tool.

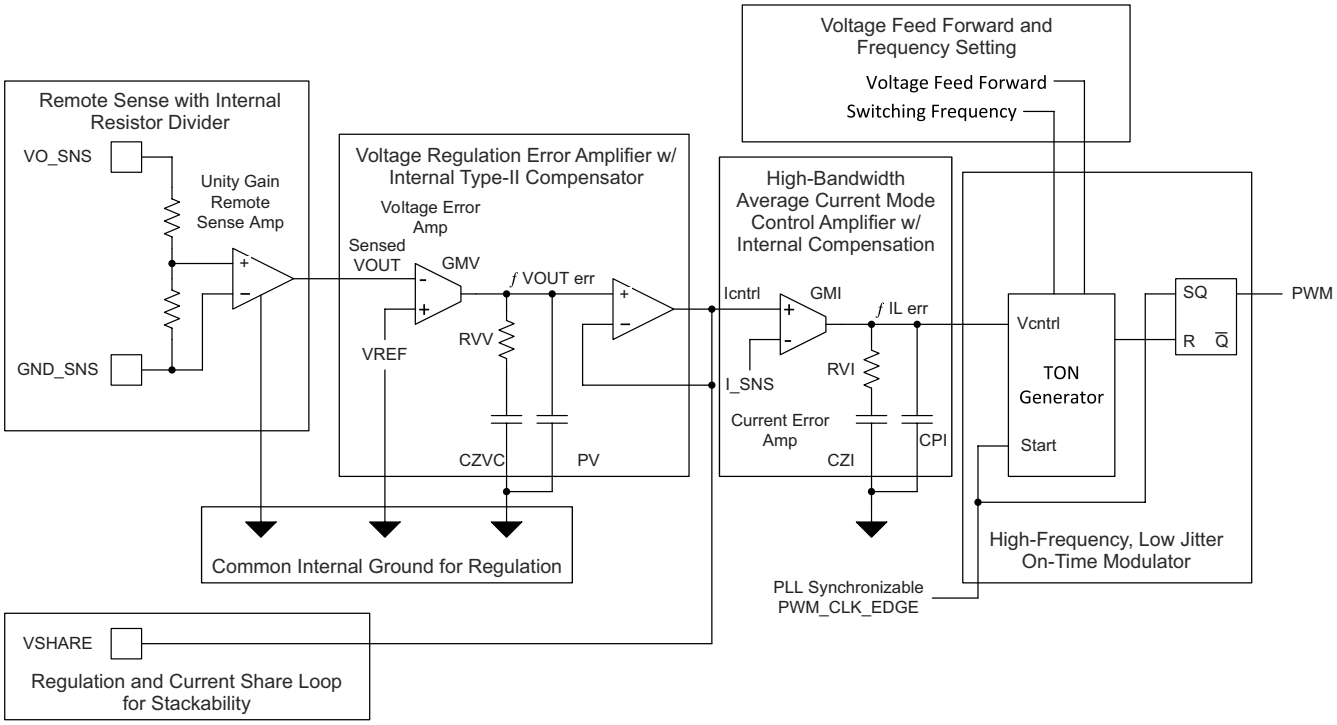

Figure 6-1. Average Current Mode Control Block Diagram

6.3.1.1 On-Time Modulator

The input voltage feedforward modulator converts the integrated current error signal, I_{Lerr}, into an inductor on time that provides a controlled volt-second balance across the inductor over each full switching period that simplifies the current error integration loop design. The modulator produces a full-cycle averaged small signal V_{cntrl} to $dI_{L/dt}$ transfer function given by Equation 1:

$$\frac{\frac{dI_L}{dt}}{dV_{cntrl}} = \frac{VIN}{Vramp} \times \frac{1}{L} = \frac{5.5}{L} \quad (1)$$

Thus, the inductor current modulator gain is given by Equation 2:

$$\frac{\frac{dI_L}{dV_{cntrl}}(f) = \frac{VIN}{Vramp} \times \frac{1}{L \times f} = \frac{5.5}{L \times f}}{} \quad (2)$$

This natural integration 1/f function allows the current loop to be compensated by the mid-band gain of the error current integrator. Use L = 0.47µH for calculation.

Copyright © 2024 Texas Instruments Incorporated

6.3.1.2 Current Error Integrator

The current error integrator adjusts the modulator control voltage to match the sensed inductor current, I_{sns}, to the current voltage at the VSHARE pin. The integrator is tuned through the the following parameters in *(B1h) USER_DATA_01 (COMPENSATION_CONFIG)*:

- GMI
- RVI
- CZI
- CPI
- CZI_MUL

Thanks to the natural integration of the 1/f function of the current control gain, the bandwidth of the current control loop can be adjusted with the mid-band gain of the integrator, GMI × RVI.

The current loop crossover occurs at the frequency when the full loop gain is equal to 1 according to Equation 3:

$$\left|ILOOP(f)\right| \times \frac{V_{PVIN}}{V_{ramp}} \times CSA \times \frac{1}{1.7 \times \pi \times f \times L} = 1 \tag{3}$$

Solving for the mid-band gain of the current loop, the user finds Equation 4:

$$ILOOP_{MB} = GMI \times RVI = \frac{V_{ramp}}{V_{PVIN}} \times \frac{1.7}{CSA} \times L \times \pi \times f_{coi} \tag{4}$$

While the Nyquist Theorem suggests that a bandwidth of (½) × f_{SW} is possible, inductor tolerances and phase delays in the current sense, modulator, and H-bridge power FETs make f_{SW}/4 a more practical target, which simplifies the target current loop mid-band gain to achieve a current loop bandwidth of f_{SW}/4 to Equation 5:

$$ILOOP_{MB} = GMI \times RVI = \frac{V_{ramp}}{V_{PVIN}} \times \frac{1.7}{CSA} \times L \times \pi \times \frac{f_{sw}}{4} = \frac{1.7 \times \pi}{4 \times 5.5 \times 6.155 \times 10^{-3}} \times L \times f_{sw} = 39.4 \times L \times f_{sw} \tag{5}$$

An integrator from DC to the low-frequency zero, RVI × CZI, compensates for the valley voltage of the modulator ramp and the nominal offset of the output voltage. A high-frequency filter pole, RVI × CPI between half the switching frequency and the switching frequency reduces high-frequency noise from VSHARE and minimizes pulse-width jitter.

To avoid loop interactions, the integrating zero frequency must be below the voltage loop crossover frequency, while the high-frequency pole must be between 1/2 the switching frequency and the switching frequency to limit high-frequency noise and jitter in the current loop without imposing additional phase loss in the voltage loop.

The closed loop average current mode control allows the current sense amplifier, on-time modulator, H-bridge power FETs, and inductor to operate as a transconductance amplifier with forward gain of 1/CSA or 162.5A/V with a bandwidth equal to F_{coi}.

6.3.1.3 Voltage Error Integrator

The voltage error integrator regulates the output voltage by adjusting the current control voltage, V_{SHARE}, similar to any current mode control architecture. A transconductance amplifier compares the sense feedback voltage to a programmed reference voltage to set V_{SHARE} to maintain the desired output voltage. While a regulated current source feeding an output capacitance provides a natural, stable integrator, mid-band gain is often desired to improve the loop bandwidth and transient response.

With a transconductance set by the current sense gain, the voltage loop crossover occurs when the full loop gain equals 1 according to Equation 6.

$$VOUT_SCALE_LOOP \times \left|VLOOP(f)\right| \times \frac{1}{CSA} \times \left|Z_{OUT}(f)\right| = 1 \tag{6}$$

Copyright © 2024 Texas Instruments Incorporated

To prevent the current integration loop bandwdith from negatively impacting the phase margin of the voltage loop, the voltage loop must have a target bandwidth of F_{coi}/2.5. With a current mode loop of f_{SW}/4, the voltage loop mid-band gain must be Equation 7:

$$VLOOP_{MB} = GMV \times RVV = \frac{1}{VOUT_SCALE_LOOP} \times \frac{CSA}{Z_{OUT}\left(\frac{f_{SW}}{10}\right)} \quad (7)$$

An integrator pole is necessary to maintain accurate DC regulation, and the zero-frequency set by RVV × CZV must be set below the lowest crossover frequency with the largest output capacitor intended to be supported at the output, but not more than 1/2 the target voltage loop crossover frequency, f_{cov}.

A high frequency noise pole, intended to keep switching noise out of the current loop must also be employed, with a high-frequency pole set by RVV × CPV must be set between f_{sw}/4 and f_{sw}.

For pin-programmed options of compensation components, see Table 6-9.

For PMBus programming of compensation values, see *(B1h) USER_DATA_01 (COMPENSATION_CONFIG)*.

6.3.2 Linear Regulators

TPSM8S6B24S devices have three internal linear regulators receiving power from AVIN and providing excellent bias (1.5V, 1.8V, and 5V) for the internal circuitry of the device. After AVIN, 1.5V, 1.8V, and 5V reach the respective UVLOs, the device initiates a power-on reset, after which the device can be communicated with through PMBus for configuration and users can store defaults to the NVM.

VDD5 has internally fixed undervoltage lockout of 3.9V (typical) to enable power-stage conversion. The VDD5 regulator can also be fed by an external supply of 4.75V to 5.25V to reduce internal power dissipation and improve efficiency by eliminating the loss in the internal LDO, or to allow operation with AVIN less than 4V. The external supply must be higher voltage than the LDO regulation voltage programmed by *(B5h) USER_DATA_05 (POWER_STAGE_CONFIG)*.

TI does not recommend the use of the internal regulators to power other circuits because the loads placed on the regulators can adversely affect operation of the controller.

6.3.3 AVIN and PVIN Pins

The TPSM8S6B24S allows for a variety of applications by using the AVIN and PVIN pins together or separately. The AVIN pin voltage supplies the internal control circuits of the device. The PVIN pin voltage provides the input voltage to the switching power stage. When connected to a single supply, the input voltage for AVIN and PVIN can range from 4V to 16V. If the PVIN is connected to a separate supply from AVIN, the PVIN voltage can be 2.95V to 16V. If PVIN is connected to the same supply as AVIN, then AVIN has to meet a 4V minimum and 16V maximum to drive the controller and driver.

Copyright © 2024 Texas Instruments Incorporated

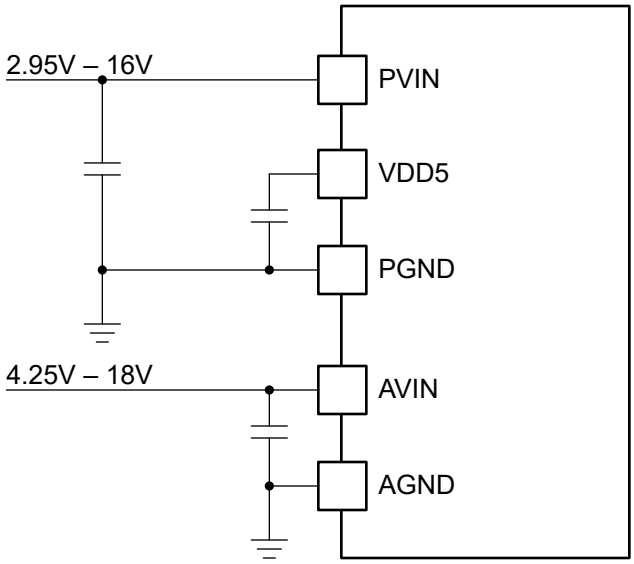

Figure 6-2. TPSM8S6B24S Separate PVIN and AVIN Connections

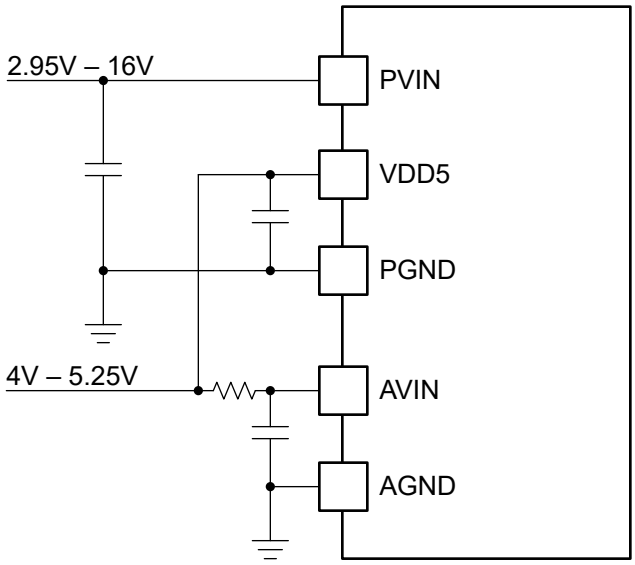

Figure 6-3. TPSM8S6B24S Separate PVIN and AVIN Connections With VDD5

Copyright © 2024 Texas Instruments Incorporated

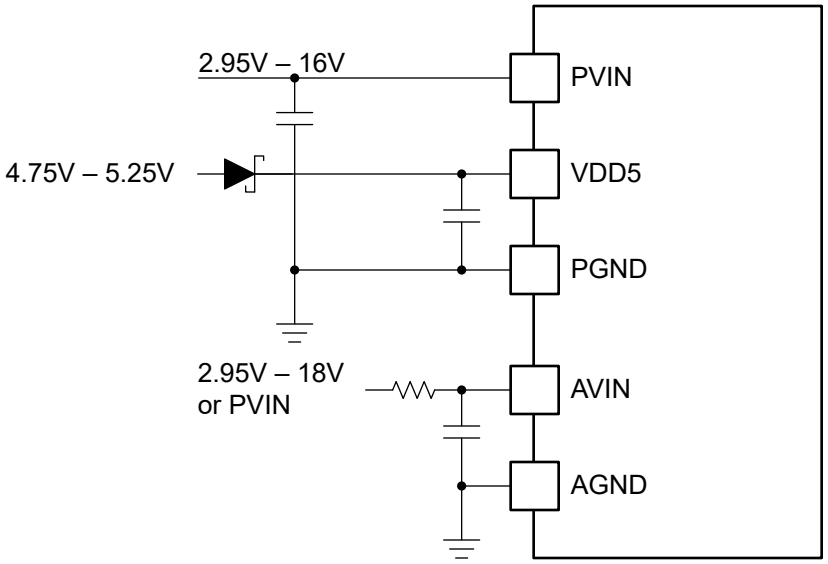

Figure 6-4. TPSM8S6B24S Separate PVIN, AVIN, and VDD5 Connections

6.3.4 Input Undervoltage Lockout (UVLO)

The TPSM8S6B24S provides four independent UVLO functions for the broadest range of flexibility in start-up control. While only the fixed AVIN UVLO is required to enable PMBus connectivity as well as VOUT and TEMPERATURE monitoring, all four UVLO functions must be met before switching can be enabled.

6.3.4.1 Fixed AVIN UVLO

The TPSM8S6B24S has an internally fixed UVLO of 2.5V (typical) on AVIN to enable the digital core and initiate power-on reset, including pin detection. The off-threshold on AVIN is 2.3V (typical).

6.3.4.2 Fixed VDD5 UVLO

The TPSM8S6B24S has an internally fixed UVLO of 3.9V (typical) on VDD5 to enable drivers and output voltage conversion. The off-threshold on VDD5 is 3.5V.

6.3.4.3 Programmable PVIN UVLO

Two PMBus commands (*(35h) VIN_ON* and *(36h) VIN_OFF*) allow the user to set PVIN voltage turn-on and turn-off thresholds independently with 0.25V resolution from 2.75V to 15.75V (6 bit) for *(35h) VIN_ON* and from 2.5V to 15.5V (6 bit) for *(36h) VIN_OFF*.

Note

If *(36h) VIN_OFF* is programmed higher than *(35h) VIN_ON*, the TPSM8S6B24S rapidly switches between enabled and disabled while PVIN remains below *(36h) VIN_OFF*. Propagation delays between enable and disable can result in the converter starting *(61h) TON_RISE* and *(65h) TOFF_FALL* in such conditions.

6.3.4.4 EN/UVLO Pin

The TPSM8S6B24S also offers a precise threshold and hysteresis current source on the EN/UVLO pin so that the device can be used to program an additional UVLO to any external voltage greater than 1.05V (typical), including AVIN, PVIN, or VDD5. For an added level of flexibility, the EN/UVLO pin can be disabled or the logic inverted through the PMBUS command *(02h) ON_OFF_CONFIG*, which allows the pin to be connected to AGND to make sure the output is not enabled until PMBus programming has been completed.

Copyright © 2024 Texas Instruments Incorporated

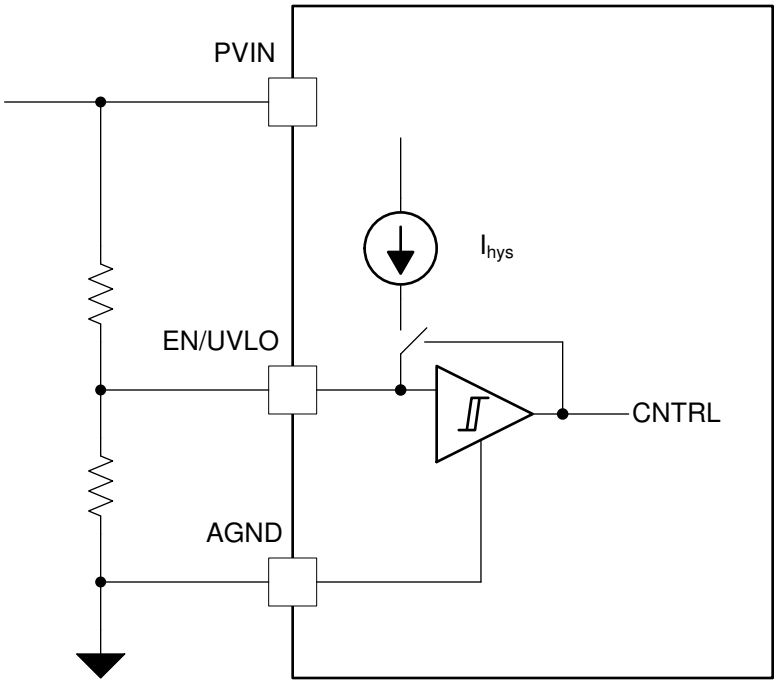

Figure 6-5. TPSM8S6B24S UVLO Voltage Divider

6.3.5 Start-Up and Shutdown

The start-up and shutdown of the device is controlled by several PMBus programmable values including:

- *(01h) OPERATION*
- *(02h) ON_OFF_CONFIG*
- *(60h) TON_DELAY*
- *(61h) TON_RISE*
- *(64h) TOFF_DELAY*
- *(65h) TOFF_FALL*

With the default *(02h) ON_OFF_CONFIG* settings, the timing is as shown in Figure 6-6. See the *Supported PMBus Commands* for full details on the implementation.

Copyright © 2024 Texas Instruments Incorporated

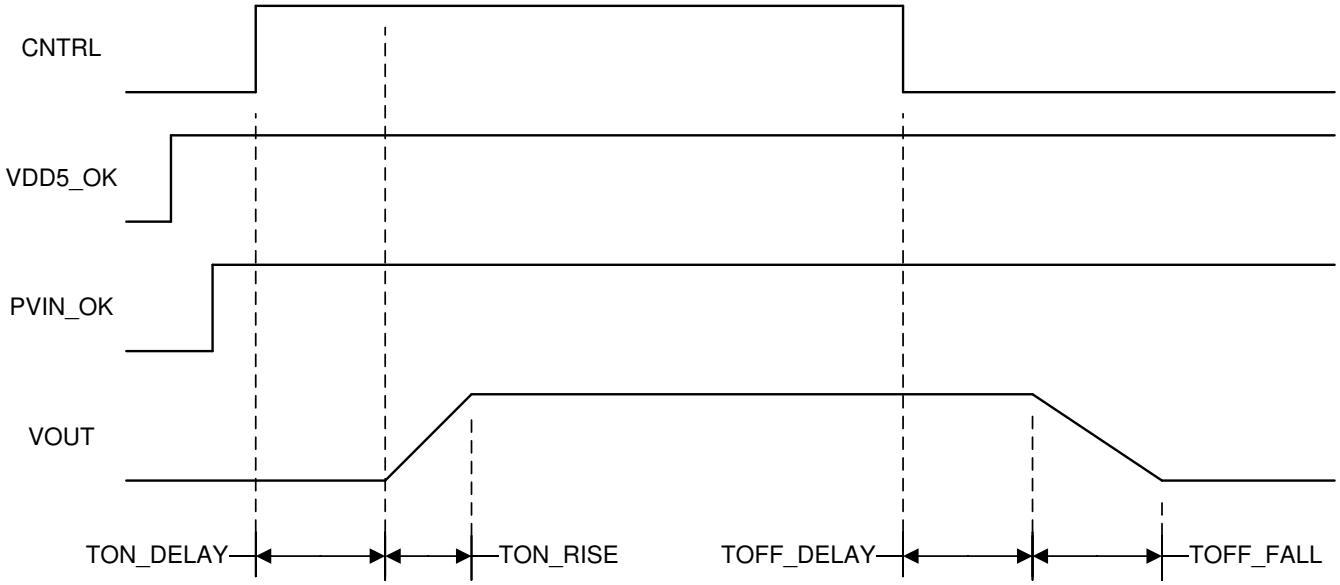

Figure 6-6. TPSM8S6B24S Start-Up and Shutdown

Note

The TPSM8S6B24S requires time between the AVIN and VDD5 reaching the UVLO levels for pin-detection and PMBus communication and valid sensing of EN/UVLO and PVIN_OK. After AVIN and VDD5 exceed the lower UVLO thresholds (2.9V typical), the TPSM8S6B24S starts the power-on-reset, self-calibration, and pin-detection. This time delay, $t_{delay(uvlo_PMBus)}$ (6ms typical) must be complete before PVIN_OK or EN/UVLO sensing is enabled.

If $VDD5_{PS_ON}$, PVIN_OK, and EN/UVLO are above the thresholds before the end of $t_{delay(uvlo_PMBus)}$, *(60h) TON_DELAY* starts after $t_{delay(uvlo_PMBus)}$ completes.

If $VDD5_{PS_ON}$, PVIN_OK, or EN/UVLO are below the thresholds when $t_{delay(uvlo_PMBus)}$ completes, *(60h) TON_DELAY* starts when VDD5_OK, PVIN_OK, and EN/UVLO are all above the thresholds.

6.3.6 Differential Sense Amplifier and Feedback Divider

The TPSM8S6B24S includes a fully integrated, internal, precision feedback divider and remote sense. Using both the selectable feedback divider and precision adjustable reference, output voltages up to 6.0V can be obtained. The feedback divider can be programmed to divider ratios of 1:1, 1:2, 1:4, or 1:8 using the *(29h) VOUT_SCALE_LOOP* command.

The recommended operating range of *(21h) VOUT_COMMAND* is dependent upon the feedback divider ratio configured *(29h) VOUT_SCALE_LOOP* as follows:

Table 6-1. (29h) VOUT_SCALE_LOOP and (21h) VOUT_COMMAND Recommended Range

	RECOMMENDED V_{OUT} RANGE (V)
1	0.5 to 0.75
0.5	0.5 to 1.5
0.25	1 to 3
0.125	2 to 6

Copyright © 2024 Texas Instruments Incorporated

Setting *(21h) VOUT_COMMAND* lower than the recommended range can negatively affect V_{OUT} regulation accuracy while setting *(21h) VOUT_COMMAND* above the recommended range can limit the actual output voltage achieved.

Note

If the regulation output voltage is limited by the recommended range of the current *(29h) VOUT_SCALE_LOOP* value, V_{OUT} can be below the intended *(43h) VOUT_UV_WARN_LIMIT* or *(44h) VOUT_UV_FAULT_LIMIT* without triggering the respective warning or faults due to the limited range of the reference voltage.

6.3.7 Set Output Voltage and Adaptive Voltage Scaling (AVS)

The initial output voltage can be set by the *VSEL* pin at AVIN power up. As part of power-on reset (POR), the VSEL pin senses both the resistance from the VSEL pin to AGND and the divider ratio of the VSEL pin between B1V5 and AGND. These values program *(29h) VOUT_SCALE_LOOP*, *(21h) VOUT_COMMAND*, *(2Bh) VOUT_MIN*, and *(24h) VOUT_MAX* and select the appropriate settings for the internal feedback divider and precision adjustable reference voltage. After the TPSM8S6B24S completes the POR and enables PMBus communication, these initial values can be changed through PMBus communication.

- *(20h) VOUT_MODE*
- *(21h) VOUT_COMMAND*
- *(29h) VOUT_SCALE_LOOP*
- *(22h) VOUT_TRIM*
- *(25h) VOUT_MARGIN_HIGH*
- *(26h) VOUT_MARGIN_LOW*
- *(01h) OPERATION*
- *(02h) ON_OFF_CONFIG*

The output voltage can be programmed through PMBus, and the value is related to the following registers:

- *(24h) VOUT_MAX*
- *(2Bh) VOUT_MIN*
- *(40h) VOUT_OV_FAULT_LIMIT*
- *(42h) VOUT_OV_WARN_LIMIT*
- *(43h) VOUT_UV_WARN_LIMIT*
- *(44h) VOUT_UV_FAULT_LIMIT*

The TPSM8S6B24S defaults to the relative format for the following, but can be changed to use absolute format through the PMBus command *(20h) VOUT_MODE*:

- *(25h) VOUT_MARGIN_HIGH*
- *(26h) VOUT_MARGIN_LOW*
- *(40h) VOUT_OV_FAULT_LIMIT*
- *(42h) VOUT_OV_WARN_LIMIT*
- *(43h) VOUT_UV_WARN_LIMIT*
- *(44h) VOUT_UV_FAULT_LIMIT*

Refer to the detailed description of *(20h) VOUT_MODE* for details.

6.3.7.1 Reset Output Voltage

The *(21h) VOUT_COMMAND* value and the corresponding output voltage can be reset to the last selected power-on reset value set by *VSEL* or EEPROM as selected in the *(EEh) MFR_SPECIFIC_30 (PIN_DETECT_OVERRIDE)* command when the PGD/RST pin function is set to RESET# in the *(EDh) MFR_SPECIFIC_29 (MISC_OPTIONS)* PMBus command. To reset *(21h) VOUT_COMMAND* to the last power-on reset value, when the RESET# optional function is enabled, assert the PGD/RST_B pin low externally. While RESET# is asserted low, *(21h) VOUT_COMMAND* values received through PMBus are ACKed but no change in *(21h) VOUT_COMMAND* is made. When RESET# is selected in *(EDh) MFR_SPECIFIC_29 (MISC_OPTIONS)*,

Copyright © 2024 Texas Instruments Incorporated

an internal pullup on the PGD/RST pin can be selected by the PULLUP# bit in the same PMBus command to eliminate the need for an external pullup with the RESET# function.

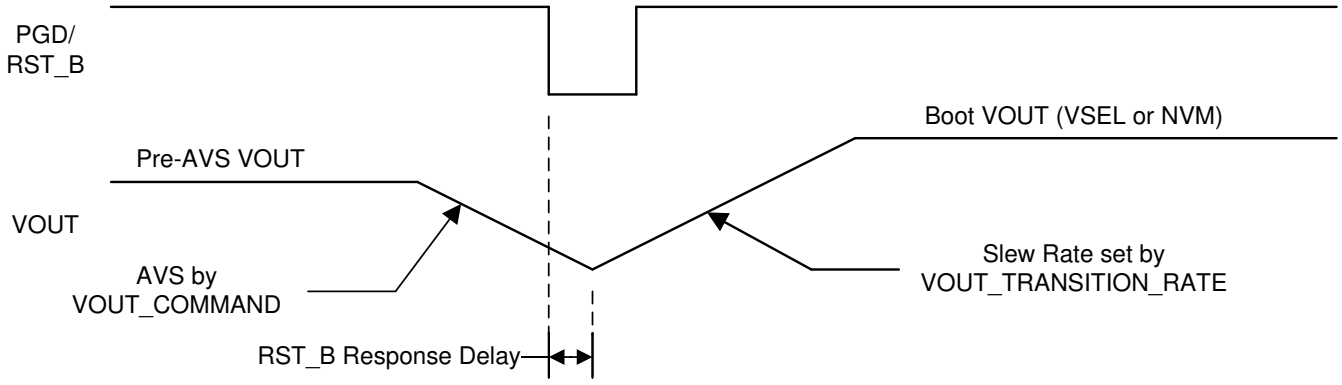

Figure 6-7. TPSM8S6B24S Output Voltage Reset

6.3.7.2 Soft Start

To control the inrush current needed to charge the output capacitor bank during start-up, the TPSM8S6B24S implements a soft-start time programmed by the *(61h) TON_RISE* command. When the device is enabled, the reference voltage ramps from 0V to the final level defined by the following at a slew rate defined by the *(61h) TON_RISE* command:

- *(21h) VOUT_COMMAND*
- *(29h) VOUT_SCALE_LOOP*
- *(22h) VOUT_TRIM*
- *(25h) VOUT_MARGIN_HIGH*
- *(26h) VOUT_MARGIN_LOW*
- *(01h) OPERATION*

The TPSM8S6B24S devices support several soft-start times from 0ms to 31.75ms in 250µs steps (7 bits) selected by the *(61h) TON_RISE* command. The t_{ON_RISE} time is selectable by pinstrapping through the *MSEL2* pin (eight options), PMBus programming, or both.

During soft start, when the PWM pulse width is shorter than the minimum controllable on time, pulse skipping can be seen and the output can show larger ripple voltage than normal operation.

6.3.8 Prebiased Output Start-Up

The TPSM8S6B24S limits current from being discharged from a prebiased output voltage during start-up by preventing the low-side FET from forcing the SW node low until after the first PWM pulse turns on the high-side FET. After VOSNS voltage exceeds the increasing reference voltage and high-side SW pulses start, the TPSM8S6B24S limits the synchronous rectification during each SW period with a narrow on time. The maximum low-side MOSFET on time slowly increases on a cycle-by-cycle basis until 128 switching periods have elapsed and the synchronous rectifier runs fully complementary to the high-side MOSFET. This action limits the sinking of current from a prebiased output, and makes sure the output voltage start-up and ramp-to regulation sequences are monotonically increasing.

In the event of a prebiased output voltage greater than *(40h) VOUT_OV_FAULT_LIMIT*, the TPSM8S6B24S responds as soon as TPSM8S6B24S completes POR and VDD5 is greater than the own 3.9V UVLO, even if conversion is disabled by EN/UVLO or the PMBus *(01h) OPERATION* command.

6.3.9 Soft Stop and (65h) TOFF_FALL Command

When enabled by *(02h) ON_OFF_CONFIG* or *(01h) OPERATION*, the TPSM8S6B24S implements the *(65h) TOFF_FALL* command to force a controlled decrease of the output voltage from regulation to 0. There can be negative inductor current forced during the *(65h) TOFF_FALL* time to discharge the output voltage. The setting of *(65h) TOFF_FALL* of 0ms means the unit to bring the output voltage down to 0 as quickly as possible,

Copyright © 2024 Texas Instruments Incorporated

which results in an effective *(65h) TOFF_FALL* time of 0.5ms. When disabled in the *(02h) ON_OFF_CONFIG* for the turn-off controlled by the EN/UVLO pin or bit 6 of *(01h) OPERATION* if the regulator is turned off by *(01h) OPERATION* command, both high-side and low-side FET drivers are turned off immediately and the output voltage slew rate is controlled by the discharge from the external load.

This feature is disabled for EN/UVLO in *(02h) ON_OFF_CONFIG* by default.

6.3.10 Power Good (PGOOD)

When conversion is enabled and t_{ON_RISE} complete, if the output voltage remains between *(43h) VOUT_UV_WARN_LIMIT* and *(42h) VOUT_OV_WARN_LIMIT*, the PGOOD open-drain output is released and allowed to rise to an externally supplied logic level. Upon any fault condition with a shutdown response, the PGOOD open-drain output is asserted, forcing PGOOD low by default. See Table 6-4 for the possible sources to pull down the PGOOD pin.

The PGOOD signal can be connected to the EN/UVLO pin of another device to provide additional controlled turnon and turnoff sequencing.

6.3.11 Set Switching Frequency

An internal oscillator generates a 275kHz to 1.1MHz clock for PWM switching with 16 discrete programmable options. The switching frequency is selectable by pinstrapping through the resistor divider of *MSEL1* (seven options), PMBus programming (nine options), or both, using the *(33h) FREQUENCY_SWITCH* command, listed in Table 6-2.

Table 6-2. Oscillator f_{SW} Options

Programmable f_{SW} OPTIONS (kHz)	f_{SW} PIN-STRAPPING OPTIONS (kHz)
275	275
325	325
375	—
450	450
550	550
650	650
750	—
900	900
1100	1100

6.3.12 Frequency Synchronization

The oscillator can be synchronized to external clock (SYNC IN) or output a clock to synchronize other devices (SYNC out) on the SYNC pin. To support phase shifted clock for both multi-rail interleaving and multi-phase operation, the internal oscillator can be phase-shifted from the SYNC pin by 0, 90, 120, 180, 240, or 270 degrees for 1-, 2-, 3-, or 4-phase operation. The SYNC IN or SYNC OUT function, and phase position of single phase or standalone devices can be selected by pinstrapping through a resistor divider on at the *ADRSEL* pin, or by the resistor from the *MSEL2* pin to AGND for multi-phase loop follower devices.

In single output multi-phase stack configurations, the SYNC phase offset is programmed along with device count and phase position using the *MSEL2* pin. Loop follower devices in multi-phase stacks are always configured as SYNC_IN while the loop controller device can be configured for auto-detect, SYNC_IN, or SYNC_OUT through the resistor divider on the ADRSEL pin.

Table 6-3. Pin Programmed Phase Positions through ADRSEL Resistor Divider (Single Phase Standalone)

RDIV CODE	PHASE POSITION (DEGREE)	SYNC IN and OUT
Open (No resistor to BP1V5)	0	Auto-detect In and Out
0, 1	0	In
2, 3	90	In

Copyright © 2024 Texas Instruments Incorporated

Table 6-3. Pin Programmed Phase Positions through ADRSEL Resistor Divider (Single Phase Standalone) (continued)

RDIV CODE	PHASE POSITION (DEGREE)	SYNC IN and OUT
4, 5	120	In
6, 7	180	In
8, 9	240	In
10,11	270	In
12, 13	0	Out
14, 15	180	Out

After initial power up and pin detection, if SYNC IN/OUT is set as auto-detection configuration, the TPSM8S6B24S senses the SYNC pin to determine if there is any external SYNC clock. Switching or a consistent pullup on the SYNC pin sets the device for SYNC_IN while a consistent pulldown on SYNC sets the device for SYNC_OUT. The TPSM8S6B24S devices programmed to be loop followers are always programmed to be SYNC IN.

When configured for SYNC_IN, if SYNC input pulses are missed for two cycles, or the oscillator frequency drops below 50% of the free-running switching frequency, the device determines that SYNC clock is lost. If the TPSM8S6B24S is part of a multi-phase stack, the converter shuts down and remains disabled until a SYNC signal is reestablished to prevent damage due to the loss of synchronization. Single phase standalone devices continues to operate at approximately 50% of the nominal frequency.

6.3.13 Loop Follower Detection

The GOSNS/FLWR pin voltage is detected at power up. When the GOSNS/FLWR pin voltage is pulled high to BP1V5, the device is recognized as a loop follower. When the GOSNS/FLWR pin is connected to the output ground, the TPSM8S6B24S is configured as a loop controller.

6.3.14 Current Sensing and Sharing

Both high-side and low-side FET use a SenseFET architecture for current sensing to achieve accurate and temperature-compensated current monitoring. This SenseFET architecture uses the parasitic resistance of the FETs to achieve lossless current sense with no external components.

When multiple (2 ×, 3 ×, or 4 ×) devices operate in a multi-phase application, all devices share the same internal control voltage through the VSHARE pin. The sensed current in each phase is regulated by the VSHARE voltage by an internal transconductance amplifier to achieve loop compensation and current balancing between different phases. The amplifier output voltage is compared with an internal PWM ramp to generate the PWM pulse.

6.3.15 Telemetry

The telemetry subsystem in the controller core supports direct measurements of the following:

- Input voltage
- Output voltage
- Output current
- Die temperature

The ADC supports internal rolling window averaging with rolling windows up to 16 previous measurements for accurate measurements of these key system parameters. Each ADC conversion requires less than 500µs, allowing each telemetry value to be updated within 2ms.

The current sense telemetry, which senses the low-side FET current at the start and end of each low-side FET on time and averages the two measurements to monitor the average inductor current over-report current if the inductor current is non-linear during the low-side FET on time, such as when the inductor is operating above the saturation current.

Copyright © 2024 Texas Instruments Incorporated

6.3.16 Overcurrent Protection

Both low-side overcurrent (OC) and high-side short-circuit protection are implemented.

The low-side overcurrent fault and warning thresholds are programmed through PMBus and sensed across cycle-by-cycle average current through the low-side MOSFET and compared to the set warning or fault threshold while high-side pulses are terminated on a cycle-by-cycle basis, if the peak current through the high-side MOSFET exceeds the 1.5 × the programmed low-side threshold.

When either a low-side overcurrent or high-side short-circuit threshold is exceeded during a switching cycle, an OCP fault counter is incremented. If no overcurrent condition is detected in a switching cycle, the counter is decremented. If the counter exceeds the delay selected by the *(47h) IOUT_OC_FAULT_RESPONSE* PMBus value (default = 3), overcurrent fault condition is declared and the output shuts down. Restart and timing is also defined as part of *(47h) IOUT_OC_FAULT_RESPONSE*.

The output OC fault thresholds and fault response are set through PMBUS. The OC fault response can be set to shutdown, restart, or ignore.

6.3.17 Overvoltage, Undervoltage Protection

The voltage on VOSNS pin is monitored to provide output voltage overvoltage (OV) and undervoltage (UV) protection. When VOSNS voltage is higher than OV fault threshold, OV fault is declared and the low-side FET is turned on to discharge the output voltage and eliminate the OV condition. The low-side FET remains on until the VOSNS voltage is discharged to 200mV divide by the internal feedback divider as programmed by *(29h) VOUT_SCALE_LOOP*. After the output voltage is discharged, the output is disabled and the converter times out and restarts according to the *(41h) VOUT_OV_FAULT_RESPONSE* PMBus command. When VOSNS voltage is lower than UV fault threshold, UV fault is declared. After an initial delay programmed by the *(45h) VOUT_UV_FAULT_RESPONSE* PMBus command, the output is disabled and the converter times out and restarts according to the *(45h) VOUT_UV_FAULT_RESPONSE* PMBus command.

The output UV/OV fault thresholds and fault response are set through PMBUS. The UV/OV fault response can be set to shutdown, restart, or continue operating without interruption.

6.3.18 Overtemperature Management

There are two schemes of overtemperature protections in the TPSM8S6B24S:

1. On-chip die temperature sensor for monitoring and overtemperature protection (OTP)
2. The bandgap based thermal shutdown (TSD) protection. TSD provides OT fail-safe protection in the event of a failure of the temperature telemetry system, but can be disabled through *(50h) OT_FAULT_RESPONSE* for high temperature testing

The overtemperature protection (OTP) threshold is set through PMBus and compares the *(8Dh) READ_TEMPERATURE_1* telemetry to the *(51h) OT_WARN_LIMIT* and *(4Fh) OT_FAULT_LIMIT*. The overtemperature (OT) fault response can be set to shutdown, restart, or continue operating without interruption.

6.3.19 Fault Management

For the response on OC fault, OT fault, and thermal shutdown for multi-phase stack, the shutdown response has the highest priority, followed by restart response. Continue operating without interruption response has the lowest priority.

When multiple faults occur in rapid succession, the first fault occuring to mask the second fault is pissible. If the first fault to be detected is configured to continue operating without interruption, and the second fault is configured to shutdown and restart, the second fault shuts down, but can fail to restart as programmed.

Table 6-4. Fault Protection Summary

FAULT OR WARNING	PROGRAMMING	FAULT RESPONSE SETTING	FET BEHAVIOR	ACTIVE DURING t_{ON_RISE}	SMB_ALRT	MASKABLE	PGOOD LOGIC
Internal OT fault	(4Fh) OT_FAULT_LIMIT	Shutdown	Both FETs off	Yes	Y	Y	Low
		Restart	Both FETs off, restart				
		Ignore	FETS still controlled by PWM				High

Copyright © 2024 Texas Instruments Incorporated

Table 6-4. Fault Protection Summary (continued)

FAULT OR WARNING	PROGRAMMING	FAULT RESPONSE SETTING	FET BEHAVIOR	ACTIVE DURING t_{ON_RISE}	SMB_ALRT	MASKABLE	PGOOD LOGIC
Internal OT warning	(51h) OT_WARN_LIMIT	Shutdown or restart on Fault	FETS still controlled by PWM	Yes	Y	Y	High
		Ignore fault					
TSD	Threshold fixed internally	Shutdown	Both FETs off	Yes	Y	Y	Low
		Restart	Both FETs off, restart				High
		Ignore	FETS still controlled by PWM				
Low Side OC fault	(46h) IOUT_OC_FAULT_LIMIT	Shutdown	3 PWM counts, then both FETs off	Yes	Y	Y	Low
		Restart	3 PWM counts, then both FETs off, restart after [DELAY] × t_{ON_RISE}				
		Ignore	FETS still controlled by PWM				High
Low Side OC warning	(4Ah) IOUT_OC_WARN_LIMIT	Shutdown or restart on Fault	FETS still controlled by PWM	Yes	Y	Y	High
		Ignore fault					
Negative OC fault (lower priority than OVF)	N/A	Enable	Turn off LS FET	Yes	Y	Y	Low
		Disable	FETS still controlled by PWM				High
High side OC fault	(46h) IOUT_OC_FAULT_LIMIT	Shutdown	Three cycles of pulse-by-pulse current limiting followed by both FETs off	Yes	Y	Y	Low
		Restart	3 cycles of pulse-by-pulse current limiting followed by both FETs off, restart after [DELAY] × t_{ON_RISE}				
		Ignore	FETS still controlled by PWM				High
Vout OV fault	(40h) VOUT_OV_FAULT_LIMIT	Shutdown	LS FET latched ON or turned on till V_{OUT}reaches 200mV/ VOUT_SCALE_LOOP; HS FET OFF	No	Y	Y	Low
		Restart	LS FET latched ON or turned on till V_{OUT}reaches 200mV/ VOUT_SCALE_LOOP; HS FET OFF, restart after [DELAY] × t_{ON_RISE}				
		Ignore	FETS still controlled by PWM				High
V_{OUT} OVF fix	(40h) VOUT_OV_FAULT_LIMIT	Shutdown	LS FET latched ON or turned on till V_{OUT}reaches 200mV/ VOUT_SCALE_LOOP; HS FET OFF	Yes	Y	Y	Low
		Restart	LS FET latched ON or turned on till V_{OUT}reaches 200mV/ VOUT_SCALE_LOOP; HS FET OFF, restart after [DELAY] × t_{ON_RISE}				
		Ignore	FETS still controlled by PWM				High
Vout OV warning	(42h) VOUT_OV_WARN_LIMIT	Shutdown or restart on Fault	FETS still controlled by PWM	No	Y	Y	High
		Ignore fault					
Vout UV fault	(44h) VOUT_UV_FAULT_LIMIT	Shutdown	Both FETs off	No	Y	Y	Low
		Restart	Both FETs off, restart after [DELAY] × t_{ON_RISE}				
		Ignore	FETS still controlled by PWM				High
Vout UV warning	(43h) VOUT_UV_WARN_LIMIT	Shutdown or restart on Fault	FETS still controlled by PWM	No	Y	Y	Low
		Ignore fault					
$t_{ON\ MAX}$ rault	(62h) TON_MAX_FAULT_LIMIT	Shutdown	Both FETs off	Yes	Y	Y	Low
		Restart	Both FETs off, restart after [DELAY] × t_{ON_RISE}				
		Ignore	FETS still controlled by PWM				High
PVin UVLO	(35h) VIN_ON, (36h) VIN_OFF	Shutdown	Both FETs off	Yes	Y	Y	Low
PVIN OV FAULT	(55h) VIN_OV_FAULT_LIMIT	Shutdown	Both FETs off	Yes	Y	Y	Low
		Restart	Both FETs off, restart				
		Ignore	FETS still controlled by PWM				High
BCX_fault	N/A	N/A	FETS still controlled by PWM	Yes	Y	Y	High

Copyright © 2024 Texas Instruments Incorporated

Table 6-4. Fault Protection Summary (continued)

FAULT OR WARNING	PROGRAMMING	FAULT RESPONSE SETTING	FET BEHAVIOR	ACTIVE DURING t_{ON_RISE}	SMB_ALRT	MASKABLE	PGOOD LOGIC
Pin_Strap_NonConverge	N/A	VSEL	Both FETs off, pull low VSHARE	No (active before t_{ON_RISE})	N	N/A	Low
		MSEL1					
		MSEL2					
		ADRSEL					
SYNC_Fault	N/A	Loop controller or standalone device	FETS still controlled by PWM	Yes	N	N/A	High
		Loop follower device	Both FETs off, pull low VSHARE				Low
SYNC_High/Low	N/A	Loop controller or standalone device	FETS still controlled by PWM	Yes	N	N/A	High
		Loop follower device	Both FETs off, pull low VSHARE				Low

6.3.20 Back-Channel Communication

To allow multiple devices with a shared output to communicate through a single PMBus address and single PMBus loop follower, the TPSM8S6B24S uses a back-channel communication implemented through BCX_CLK and BCX_DAT pins. During POR, all of the devices connected to VSHARE must also be connected to BCX_CLK and BCX_DAT and have appropriate *(ECh) MFR_SPECIFIC_28 (STACK_CONFIG)* settings. Any programming error among the devices of a stack results in a POR fault and prevent enabling of conversion.

During POR, the loop controller reads the programmed values from the loop followers to make sure all expected loop followers are present and correctly phase-shifted. Then, the loop controller loads critical operating parameters such as the following to the loop follower devices to make sure of correct operation of the STACK:

- *(B1h) USER_DATA_01 (COMPENSATION_CONFIG)*
- *(33h) FREQUENCY_SWITCH*
- *(61h) TON_RISE*
- *(21h) VOUT_COMMAND*

During operation, the loop controller device receives and responds to all PMBus communication, and loop follower devices do not must be connected to the PMBus. If the loop controller receives commands that require updates to the PMBus registers of the loop follower, the loop controller relays these commands to the loop followers. Additionally, the loop controller periodically polls loop follower devices for status and telemetry information to maintain an accurate record of the telemetry and STATUS information for the full stack of devices.

Most PMBus communication must be directed to all phases by leaving the *(04h) PHASE* PMBus command at the power-on reset default value of FFh. If a specific device must be communicated with, the *(04h) PHASE* command can be changed to address a specific device within the stack, as set by the order value of the *(37h) INTERLEAVE* command programmed during POR.

When commands are directed to individual loop followers, write commands are queued by the loop controller to be sent to the loop followers through the BCX if other BCX communication is in progress. Queued write commands are written to the loop followers in the order the loop controller receives them. To avoid unnecessary delays on the PMBus and excessive clock stretching, read transactions targeting individual loop followers are not queued, and are processed as soon as the BCX bus is available. As a result, a read command targeting an individual loop follower immediately following a write command can be processed before the preceding write command. To make sure of accurate read-back, users must allow a minimum of 4ms between writing a value to an individual loop follower and reading that same value back from the same loop follower.

6.3.21 Switching Node (SW)

The SW pin connects to the switching node of the power conversion stage. The SW pin acts as the return path for the high-side gate driver. When configured as a synchronous buck stage, the voltage swing on SW normally traverses from below ground to well above the input voltage. Parasitic inductance in the high-side FET and the output capacitance (COSS) of both power FETs form a resonant circuit that can produce high frequency (> 100MHz) ringing on this node. The voltage peak of this ringing, if not controlled, can be significantly higher than the input voltage. MAke sure that the peak ringing amplitude does not exceed the absolute maximum rating limit for the pin.

Copyright © 2024 Texas Instruments Incorporated

In many cases, a series resistor and capacitor snubber network connected from the switching node to PGND can be helpful in damping the ringing and decreasing the peak amplitude. Provide provisions for snubber network components in the layout of the printed circuit board. If testing reveals that the ringing amplitude at the SW pin exceeds the limit, then include snubber components.

6.3.22 PMBus® General Description

Timing and electrical characteristics of the PMBus interface specification can be found in the *PMB Power Management Protocol Specification, Part 1, revision 1.3* available at http://pmbus.org. The TPSM8S6B24S device supports the 100kHz, 400kHz, and 1MHz bus timing requirements.

The TPSM8S6B24S uses clock stretching during PMBus communication, but only stretches the clock during specific bits of the transaction.

- The TPSM8S6B24S does not stretch the clock during the address byte of any transaction.
- The TPSM8S6B24S can stretch the clock between bit 0 of the command byte and the ACK response.
- The TPSM8S6B24S stretches the clock after bit 0 of the read address of a read transaction.
- The TPSM8S6B24S stretches the clock between bit 0 of the last byte of data and the ACK response
- The TPSM8S6B24S can stretch the clock between bit 1 and bit zero of every fourth byte of data for blocks with more than four bytes of data.

Communication over the PMBus interface can either support the packet error checking (PEC) scheme or not. If the loop controller supplies clock (CLK) pulses for the PEC byte, PEC is used. If the CLK pulses are not present before a STOP, the PEC is not used. If PEC is always used, consider enabling Require PEC in *(EDh) MFR_SPECIFIC_29 (MISC_OPTIONS)* to configure the TPSM8S6B24S to reject any write transaction that does not include CLK pulses for a PEC byte.

The device supports a subset of the commands in the *PMBus 1.3 Power Management Protocol Specification*. See *Supported PMBus Commands* for more information

The TPSM8S6B24S also supports the SMB_ALERT response protocol. The SMB_ALERT response protocol is a mechanism by which the TPSM8S6B24S can alert the bus loop controller that it has experienced an alert and has important information for the host. The host must process this event and simultaneously access all loop follower on the bus that support the protocol through the alert response address. All loop followers that are asserting SMB_ALERT must acknowledge this request with the PMBus address. The host performs a modified receive byte operation to get the address of the loop follower. At this point, the loop controller can use the PMBus status commands to query the loop follower that caused the alert. For more information on the SMBus alert response protocol, see the system management bus (SMBus) specification. Persistent faults associated with status registers other than *(7Eh) STATUS_CML* reasserts SMB_ALERT after responding to the host alert response address.

The TPSM8S6B24S contains nonvolatile memory that is used to store configuration settings and scale factors. The settings programmed into the device are not automatically saved into this nonvolatile memory. The *(15h) STORE_USER_ALL* command must be used to commit the current PMBus settings to nonvolatile memory as device defaults. The settings that are capable of being stored in nonvolatile memory are noted in the detailed descriptions.

All pin programmable values can be committed to non-volatile memory. The POR default selection between pin programmable values and nonvolatile memory can be selected by the manufacturer-specific *(EEh) MFR_SPECIFIC_30 (PIN_DETECT_OVERRIDE)* command.

6.3.23 PMBus® Address

The PMBus specification requires that each device connected to the PMBus has a unique address on the bus. The TPSM8S6B24S PMBus address is determined by the value of the resistor connected between *ADRSEL* and AGND and is programmable over the range from 0x10–0x2F, providing 32 unique PMBus addresses.

Copyright © 2024 Texas Instruments Incorporated

6.3.24 PMBus® Connections

The TPSM8S6B24S supports the 100kHz, 400kHz, and 1MHz bus speeds. Connection for the PMBus interface must follow the high power DC specifications given in section 3.1.3 in the SMBus specification V2.0 for the 400kHz bus speed or the low power DC specifications in section 3.1.2. The complete SMBus specification is available from the SMBus website.

The PMBus interface pins PMB_CLK, PMB_DATA, and SMB_ALRT require external pullup resistors to a 1.8V to 5.5V termination. Pullup resistors must be sized to meet the minimize rise-time required for the desired PMBus clock speed but must not source more current than the lowest-rated CLK, DATA, or SMB_ALRT pin on the bus when the bus voltage is forced to 0.4V. The TPSM8S6B24S supports a minimum of 20mA of sink current on PMB_CLK, PMB_DATA, and SMB_ALRT.

6.4 Device Functional Modes

6.4.1 Programming Mode

The TPSM8S6B24S devices can operate in programming mode when AVIN and VDD5 are powered above the lower UVLO but VDD5 and PVIN are not powered above the UVLO to enable conversion. In programing mode, the TPSM8S6B24S accepts and respond to PMBus commands but does not enable switching or conversion. While PMBus commands can be accepted and processed with VDD5 lower than 3V, NVM programming through the *(15h) STORE_USER_ALL* command must not be used when VDD5 is less than 3V.

Programming mode allows the TPSM8S6B24S to complete POR and to be configured through PMBus from a 3.3V supply without PVIN present.

6.4.2 Standalone, Loop Controller, Loop Follower Mode Pin Connections

The TPSM8S6B24S can be programmed as a standalone device (single output, single phase) loop controller device of a single-output, multi-phase stack of devices, or a loop follower device to a loop controller of a mult-phase stack. The details of the recommended pin connects for each configuration is given in Table 6-5.

Table 6-5. Standalone, Loop Controller, Loop Follower Pin Connections

PIN	STANDALONE	LOOP CONTROLLER	LOOP FOLLOWER
GOSNS	Ground at output regulation point	Ground at output regulation point	BP1V5
VOSNS	V_{OUT} at output regulation point	V_{OUT} at output regulation point	Float or connect to divider for other voltage to be monitored
EN/UVLO	Enable/Control or resistor divider from PVIN	Enable/Control or resistor divider from PVIN	Connect to EN/UVLO of the loop controller
MSEL1	*Programming MSEL1*	*Programming MSEL1*	Short to PGND (thermal pad)
MSEL2	*Programming MSEL2*	*Programming MSEL2*	*Programming MSEL2 for a Loop Follower Device (GOSNS Tied to BP1V5)*
VSEL	*Programming VSEL*	*Programming VSEL*	Short to PGND (thermal pad)
ADRSEL	*Programming ADRSEL*	*Programming ADRSEL*	Short to PGND (thermal pad)
VSHARE	Float or Bypass to AGND with a capacitor	Connect to VSHARE of the loop follower	Connect to VSHARE of the loop controller
SYNC	Float or external sync	External sync or loop follower SYNC	Connect to SYNC of the loop controller
PMB_CLK	Connect to system PMBus or PGND (thermal pad) if not used	Connect to system PMBus or PGND (thermal pad) if not used	Short to PGND (thermal pad)
PMB_DATA	Connect to system PMBus or PGND (thermal pad) if not used	Connect to system PMBus or PGND (thermal pad) if not used	Short to PGND (thermal pad)
SMB_ALRT	Connect to system PMBus or PGND (thermal pad) if not used	Connect to system PMBus or PGND (thermal pad) if not used	Short to PGND (thermal pad)
BCX_CLK	Short to PGND (thermal pad)	Connect to loop followers BCX_CLK	Connect to BCX_CLK of the loop controller
BCX_DAT	Short to PGND (thermal pad)	Connect to loop followers BCX_DAT	Connect to BCX_DAT of the loop controller

Copyright © 2024 Texas Instruments Incorporated

Table 6-5. Standalone, Loop Controller, Loop Follower Pin Connections (continued)

PIN	STANDALONE	LOOP CONTROLLER	LOOP FOLLOWER
PGOOD/RST_B	Connect to system PGD or RESET# or PGND (thermal pad) if not used	Connect to system PGD or RESET# or PGND (thermal pad) if not used	Short to PGND (thermal pad)

6.4.3 Continuous Conduction Mode

The TPSM8S6B24S devices operate in continuous conduction mode (CCM) at a fixed frequency, regardless of the output current. During soft start, some of the low-side MOSFET on times are limited to prevent excessive current sinking in the event the device is started with a prebiased output. After the first PWM pulse, and with each successive PWM pulse, this limit is increased to allow more low-side FET on time and transition to CCM. After this transition has completed, the low-side MOSFET and the high-side MOSFET on times are fully complementary.

6.4.4 Operation With CNTL Signal (EN/UVLO)

According to the value in the *(02h) ON_OFF_CONFIG* register, the TPSM8S6B24S devices can be commanded to use the EN/UVLO pin to enable or disable regulation, regardless of the state of the *(01h) OPERATION* command. The EN/UVLO pin can be configured as either active high or active low (inverted) logic. To use EN/UVLO pin as a programmable UVLO, the polarity set by *(02h) ON_OFF_CONFIG* must be positive logic.

6.4.5 Operation with (01h) OPERATION Control

According to the value in the *(02h) ON_OFF_CONFIG* register, the TPSM8S6B24S devices can be commanded to use the *(01h) OPERATION* command to enable or disable regulation, regardless of the state of the CNTL signal.

6.4.6 Operation with CNTL and (01h) OPERATION Control

According to the value in the *(02h) ON_OFF_CONFIG* command, the TPSM8S6B24S devices can be commanded to require both a CNTRL signal from the EN/UVLO pin, and the *(01h) OPERATION* command to enable or disable regulation.

6.5 Programming

6.5.1 Supported PMBus Commands

The commands listed in Table 6-6 are implemented as described to conform to the PMBus 1.3 specification. Table 6-6 also lists the default for the bit behavior and register values.

Table 6-6. Supported PMBus Commands and Default Values

CMD CODE (HEX)	COMMAND NAME (PMBus 1.3 SPEC)	DEFAULT VALUE
01h	OPERATION	04h
02h	ON_OFF_CONFIG	17h
03h	CLEAR_FAULTS	n/a
04h	PHASE	FFh
10h	WRITE_PROTECT	00h
15h	STORE_USER_ALL	n/a
16h	RESTORE_USER_ALL	n/a
19h	CAPABILITY	D0h
1Bh	SMBALERT_MASK	n/a
20h	VOUT_MODE	97h
21h	VOUT_COMMAND	0266h
22h	VOUT_TRIM	0000h
24h	VOUT_MAX	0300h
25h	VOUT_MARGIN_HIGH	021Ah
26h	VOUT_MARGIN_LOW	01E6h

Copyright © 2024 Texas Instruments Incorporated

Table 6-6. Supported PMBus Commands and Default Values (continued)

CMD CODE (HEX)	COMMAND NAME (PMBus 1.3 SPEC)	DEFAULT VALUE
27h	VOUT_TRANSITION_RATE	E010h
29h	VOUT_SCALE_LOOP	C840h
2Bh	VOUT_MIN	0100h
33h	FREQUENCY_SWITCH	028Ah
35h	VIN_ON	F00Bh
36h	VIN_OFF	F00Ah
37h	INTERLEAVE	0020h
38h	IOUT_CAL_GAIN	C880h
39h	IOUT_CAL_OFFSET	E000h
40h	VOUT_OV_FAULT_LIMIT	024Ch
41h	VOUT_OV_FAULT_RESPONSE	BDh
42h	VOUT_OV_WARN_LIMIT	022Eh
43h	VOUT_UV_WARN_LIMIT	01D2h
44h	VOUT_UV_FAULT_LIMIT	01B3h
45h	VOUT_UV_FAULT_RESPONSE	BEh
46h	IOUT_OC_FAULT_LIMIT	F068h
47h	IOUT_OC_FAULT_RESPONSE	FFh
4Ah	IOUT_OC_WARN_LIMIT	F050h
4Fh	OT_FAULT_LIMIT	0096h
50h	OT_FAULT_RESPONSE	BCh
51h	OT_WARN_LIMIT	007Dh
55h	VIN_OV_FAULT_LIMIT	0015h
56h	VIN_OV_FAULT_RESPONSE	3Ch
58h	VIN_UV_WARN_LIMIT	F00Ah
60h	TON_DELAY	F800h
61h	TON_RISE	F00Ch
62h	TON_MAX_FAULIT_LIMIT	F800h
63h	TON_MAX_FAULT_RESPONSE	3Bh
64h	TOFF_DELAY	F800h
65h	TOFF_FALL	F002h
78h	STATUS_BYTE	00h
79h	STATUS_WORD	00h
7Ah	STATUS_VOUT	00h
7Bh	STATUS_IOUT	00h
7Ch	STATUS_INPUT	00h
7Dh	STATUS_TEMPERATURE	00h
7Eh	STATUS_CML	00h
7Fh	STATUS_OTHER	00h
80h	STATUS_MFR_SPECIFIC	00h
88h	READ_VIN	n/a
8Bh	READ_VOUT	n/a
8Ch	READ_IOUT	n/a
8Dh	READ_TEMPERATURE_1	n/a
98h	PMBUS_REVISION	33h
99h	MFR_ID	00 54 49h

Copyright © 2024 Texas Instruments Incorporated

Table 6-6. Supported PMBus Commands and Default Values (continued)

CMD CODE (HEX)	COMMAND NAME (PMBus 1.3 SPEC)	DEFAULT VALUE
9Ah	MFR_MODEL	00 00 00h
9Bh	MFR_REVISION	00 00 00h
9Eh	MFR_SERIAL	00 00 00h
ADh	IC_DEVICE_ID	54 49 54 6D 24 62h
AEh	IC_DEVICE_REV	41 00h
B1h	USER_DATA_01 (COMPENSATION_CONFIG)	12 40 42 29 04h
B5h	USER_DATA_05 (POWER_STAGE_CONFIG)	70h
D0h	MFR_SPECIFIC_00 (TELEMETRY_CONFIG)	03 03 03 03 00 03h
DAh	MFR_SPECIFIC_10 (READ_ALL)	n/a
DBh	MFR_SPECIFIC_11 (STATUS_ALL)	n/a
E3h	MFR_SPECIFIC_19 (PGOOD_CONFIG)	009Fh
E4h	MFR_SPECIFIC_20 (SYNC_CONFIG)	F0h
ECh	MFR_SPECIFIC_28 (STACK_CONFIG)	0000h
EDh	MFR_SPECIFIC_29 (MISC_OPTIONS)	0000h
EEh	MFR_SPECIFIC_30 (PIN_DETECT_OVERRIDE)	1F2Fh
EFh	MFR_SPECIFIC_31 (DEVICE_ADDRESS)	24h
F0h	MFR_SPECIFIC_32 (NVM_CHECKSUM)	F3B4h
F1h	MFR_SPECIFIC_33 (SIMULATE FAULTS)	0000h
FAh	MFR_SPECIFIC_42 (PASSKEY)	0000h
FBh	MFR_SPECIFIC_43 (EXT_WRITE_PROTECT)	0000h
FCh	MFR_SPECIFIC_44 (FUSION_ID0)	02C0h
FDh	MFR_SPECIFIC_45 (FUSION_ID1)	54 49 4C 4F 43 4Bh

6.5.2 Pin Strapping

The TPSM8S6B24S provides four IC pins that allow the initial PMBus programming value on critical PMBus commands to be selected by the resistors connected to that pin without requiring PMBus communication. Whether a specific PMBus command is initialized to the value selected by the detected resistance or stored NVM memory is determined by the commands bit in the PIN_DETECT_OVERRIDE PMBus Command. The four pins and the commands the pins program for a loop controller or standalone device (GOSNS connected to Ground) are provided in Table 6-7.

Each pin can be programmed in one of four ways:

- Pin shorted to AGND with less than 20Ω
- Pin floating or tied to BP1V5 with more than 1MΩ
- Pin bypassed to AGND through a resistor according to R2G code only (16 resistor options)
- Pin bypassed to AGND through a resistor according to R2G code and to BP1V5 according to Divider Code (16 resistor × 16 resistor divider options)

Due to the flexibility of programming options with up to 274 configurations per pin, TI recommends that designers consider using one of the available design tools, such as *TPSM8S6x24 Compensation and Pin-Strap Resistor Calculator* to assist with proper programming resistor selection.

Table 6-7. TPSM8S6B24S Pin Programming Summary

PIN	RESISTORS	PMBus REGISTERS
MSEL1	Resistor to AGND	COMPENSATION_CONFIG
	Resistor Divider	COMPENSATION_CONFIG, FREQUENCY_SWITCH
MSEL2	Resistor to AGND	IOUT_OC_WARN_LIMIT, IOUT_OC_FAULT_LIMIT, STACK_CONFIG
	Resistor Divider	TON_RISE
VSEL	Both	VOUT_COMMAND, VOUT_SCALE_LOOP, VOUT_MAX, VOUT_MIN

Copyright © 2024 Texas Instruments Incorporated

Table 6-7. TPSM8S6B24S Pin Programming Summary (continued)

PIN	RESISTORS	PMBus REGISTERS
ADRSEL	Resistor to AGND	loop follower_ADDRESS
	Resistor Divider	loop follower_ADDRESS, SYNC_CONFIG, INTERLEAVE

Note

Resistor divider values of "none" can be implemented with no resistor to BP1V5 or use a 1MΩ resistor to BP1V5 for improved reliability and noise immunity.

loop follower devices with GOSNS tied to BP1V5 only use the resistor from *MSEL2* to AGND to program the following:

- *(4Ah) IOUT_OC_WARN_LIMIT*
- *(46h) IOUT_OC_FAULT_LIMIT*
- *(ECh) MFR_SPECIFIC_28 (STACK_CONFIG)*
- *(37h) INTERLEAVE*

The loop follower receives all other pin programmed values from the loop controller over BCX as part of the power-on reset function.

Note

The high precision Pin-Detection programming which provides 8-bit resolution for each pin in the TPSM8S6B24S can be sensitive to PCB contamination from flux, moisture, and debris. As such, users must consider committing Pin Programmed values to User Non-Volatile memory and disable future use of Pin Strapped values as part of the product flow. The programming sequence to commit Pin Programmed PMBus register values to NVM and disable future use of Pin Strapped programming is:

- Select *MSEL1*, *MSEL2*, *VSEL*, and *ADRSEL* programming resistors to program the desired PMBus register values.
- Power AVIN and VDD5 above the UVLOs to initiate pin detection and enable PMBus communication.
- Update any PMBus register values not programmed to the final value by pin detection.
- Write the value 0000h using the Write Word protocol to *(EEh) MFR_SPECIFIC_30 (PIN_DETECT_OVERRIDE)*.
- Send the command code 15h using the Send Byte protocol to initialize a *(15h) STORE_USER_ALL* function.
- Allow a minimum 100ms for the device to complete a burn of NVM User Store. Loss of AVIN or VDD5 power during this 100ms can compromise the integrity of the NVM. Failure to complete the NVM burn can result in a corruption of NVM and a POR fault on subsequent power on resets.

6.5.2.1 Programming MSEL1

The MSEL1 pin programs *(B1h) USER_DATA_01 (COMPENSATION_CONFIG)* and *(33h) FREQUENCY_SWITCH*. The resistor divider ratio for MSEL1 selects the nominal switching frequency using Table 6-8:

Table 6-8. MSEL1 Divider Code for Programming

RESISTOR DIVIDER CODE	COMPENSATION_CONFIG (CONFIG #)	FREQUENCY_SWITCH VALUE (kHz)
None (no resistor to BP1V5)	7-25 (select values)	550
0	0-15	275
1	16-31	

Copyright © 2024 Texas Instruments Incorporated

Table 6-8. MSEL1 Divider Code for Programming (continued)

RESISTOR DIVIDER CODE	COMPENSATION_CONFIG (CONFIG #)	FREQUENCY_SWITCH VALUE (kHz)
2	0-15	325
3	16-31	
4	0-15	450
5	16-31	
6	0-15	550
7	16-31	
8	0-15	650
9	16-31	
10	0-15	900
11	16-31	
12	0-15	1100
13	16-31	
14	0-15	1500
15	16-31	

The resistor to ground for MSEL1 selects the *(B1h) USER_DATA_01 (COMPENSATION_CONFIG)* values to program the following voltage loop and current loop gains. For options other than the EEPROM code (MSEL1 shorted to AGND or MSEL1 to AGND resistor code 0), the current and voltage loop zero and pole frequencies are scaled with the programmed switching frequency. The current loop pole frequency is scale located at approximately the switching frequency, while the current loop zero is located at approximately 1/20 the switching frequency. the voltage loop pole is located at approximately 1/2 the switching frequency and the voltage loop zero is located at approximately 1/100 the switching frequency.

Table 6-9. MSEL1 Resistor to AGND Code With no Divider Programming

RESISTOR CODE	COMPENSATION (NO DIVIDER)			COMPENSATION (EVEN DIVIDER)			COMPENSATION (ODD DIVIDER)		
	CONFIG #	I LOOP GAIN	V LOOP GAIN	CONFIG #	I LOOP GAIN	V LOOP GAIN	CONFIG #	I LOOP GAIN	V LOOP GAIN
Short	3	2	2	N/A	N/A	N/A	N/A	N/A	N/A
Float	EEPROM	EEPROM	EEPROM	N/A	N/A	N/A	N/A	N/A	N/A
0	7	3	1	0	EEPROM	EEPROM	16	5	0.5
1	8	3	2	1	2	0.5	17	5	1
2	9	3	4	2	2	1	18	5	2
3	10	3	8	3	2	2	19	5	4
4	12	4	1	4	2	4	20	5	8
5	13	4	2	5	2	8	21	6	0.5
6	14	4	4	6	3	0.5	22	6	1
7	15	4	8	7	3	1	23	6	2
8	17	5	1	8	3	2	24	6	4
9	18	5	2	9	3	4	25	6	8
10	19	5	4	10	3	8	26	7	0.5
11	20	5	8	11	4	0.5	27	7	1
12	22	6	1	12	4	1	28	7	2
13	23	6	2	13	4	2	20	7	4
14	24	6	4	14	4	4	30	7	8
15	25	6	8	15	4	8	21	10	2

Copyright © 2024 Texas Instruments Incorporated

With both the resistor to ground code and the resistor divider code, use the look-up table to select the appropriate resistors.

Copyright © 2024 Texas Instruments Incorporated

6.5.2.2 Programming MSEL2

The resistor divider on MSEL2 pin programs the *(61h) TON_RISE* value to select the soft-start time used by the TPSM8S6B24S.

Table 6-10. MSEL2 Divider Code for Programming

RESISTOR DIVIDER CODE	TON_RISE VALUE (ms)
None (No Resistor to BP1V5)	3
Short to AGND	
Float	
0	0.5
1	1
2	3
3	5
4	7
5	10
6	20
7	31.75

The resistor to ground for MSEL2 selects the *(4Ah) IOUT_OC_WARN_LIMIT*, *(46h) IOUT_OC_FAULT_LIMIT*, and *(ECh) MFR_SPECIFIC_28 (STACK_CONFIG)* values using Table 6-11.

Table 6-11. MSEL2 Resistor to AGND Code for IOUT_OC_WARN/FAULT_LIMIT and STACK Programming

RESISTOR TO AGND CODE	STACK_CONFIG (NUMBER OF LOOP FOLLOWERS / # OF PHASES)	OC_WARN (A)/OC_FAULT (A)
Short	0000h (0 loop followers, standalone)	40/52
Float	0001h (1 loop follower, 2-phase)	40/52
0	0000h (0 loop followers, standalone)	40/52
1	0001h (1 loop follower, 2-phase)	
2	0002h (2 loop followers, 3-phase)	
3	0003h (3 loop followers, 4-phase)	
4	0000h (0 loop followers, standalone)	30/39
5	0001h (1 loop follower, 2-phase)	
6	0002h (2 loop followers, 3-phase)	
7	0003h (3 loop followers, 4-phase)	
8	0000h (0 loop followers, standalone)	20/26
9	0001h (1 loop follower, 2-phase)	
10	0002h (2 loop followers, 3-phase)	
11	0003h (3 loop followers, 4-phase)	
12	0000h (0 loop followers, standalone)	10/14
13	0001h (1 loop follower, 2-phase)	
14	0002h (2 loop followers, 3-phase)	
15	0003h (3 loop followers, 4-phase)	

Copyright © 2024 Texas Instruments Incorporated

6.5.2.3 Programming VSEL

The resistor divider ratio for VSEL programs the *(21h) VOUT_COMMAND* range, *(29h) VOUT_SCALE_LOOP* divider, *(2Bh) VOUT_MIN*, and *(24h) VOUT_MAX* levels according to the following tables.

Select the resistor divider code that contains the desired nominal boot voltage within the range of V_{OUT} between minimum V_{OUT} and maximum V_{OUT}. For voltages from 0.5V to 1.25V, a single resistor to ground or a resistor divider can be used.

Table 6-12. VSEL Resistor Divider Code for Programming

NOMINAL BOOT VOLTAGE RANGE			RESISTOR DIVIDER CODE
MINIMUM V_{OUT}	MAXIMUM V_{OUT}	RESOLUTION	
EEPROM (1.2V)	EEPROM (1.2V)	N/A	Float
0.5	1.25	0.050	Open (bot resistor only)
0.6	0.75	0.010	0
0.75	0.9	0.010	1
0.9	1.05	0.010	2
1.05	1.2	0.010	3
1.2	1.5	0.020	4
1.5	1.8	0.020	5
1.8	2.1	0.020	6
2.1	2.4	0.020	7
2.4	3.0	0.040	8
3.0	3.6	0.040	9
3.6	4.2	0.040	10
4.2	4.8	0.040	11
3.6	4.2	0.040	12
4.2	4.8	0.040	13
4.8	5.4	0.040	14
5.4	6.0	0.040	15

With the resistor divider code selected for the range of VOUT, select the bottom resistor code with the *(21h) VOUT_COMMAND* offset and *(21h) VOUT_COMMAND* step from *Programming VSEL*.

Table 6-13. VSEL Resistor to AGND Code for Programming

RESISTOR DIVIDER CODE	VOUT_SCALE_LOOP	VOUT_MIN	VOUT_MAX	VOUT_COMMAND OFFSET (V)	VOUT_COMMAND STEP (V)
Short to AGND	0.5	EEPROM (0.5)	EEPROM (1.5)	EEPROM (1.2)	N/A
Float	0.5	0.5	1.5	1.0	N/A
None	0.5	0.5	1.5	0.50	0.050
0	0.5	0.5	1.5	0.6	0.010
1	0.5	0.5	1.5	0.75	0.010
2	0.5	0.5	1.5	0.9	0.010
3	0.5	0.5	1.5	1.05	0.010
4	0.25	1	3	1.2	0.020
5	0.25	1	3	1.5	0.020
6	0.25	1	3	1.8	0.020
7	0.25	1	3	2.1	0.020
8	0.125	2	6	2.4	0.040

Copyright © 2024 Texas Instruments Incorporated

Table 6-13. VSEL Resistor to AGND Code for Programming (continued)

RESISTOR DIVIDER CODE	VOUT_SCALE_LOOP	VOUT_MIN	VOUT_MAX	VOUT_COMMAND OFFSET (V)	VOUT_COMMAND STEP (V)
9	0.125	2	6	3.0	0.040
10	0.125	2	6	3.6	0.040
11	0.125	2	6	4.2	0.040
12	0.125	2	6	3.6	0.040
13	0.125	2	6	4.2	0.040
14	0.125	2	6	4.8	0.040
15	0.125	2	6	5.4	0.040

To calculate the resistor to AGND code, subtract the *(21h) VOUT_COMMAND* offset from the target output voltage and divide by the *(21h) VOUT_COMMAND* step.

$$\text{Code} = \frac{V_{OUT} - \text{VOUT_COMMAND(Offset)}}{\text{VOUT_COMMAND(Step)}} \quad (8)$$

6.5.2.4 Programming ADRSEL

The resistor divider for the ADRSEL pin selects the range of PMBus addresses and SYNC direction for the TPSM8S6B24S. For standalone devices with only one device supporting a single output voltage, the ADRSEL divider also selects the phase shift between SYNC and the switch node.

Table 6-14. ADRSEL Resistor Divider Code for and SYNC_IN Programming

RESISTOR DIVIDER CODE	Loop Follower_ADDRESS	SYNC IN / SYNC OUT	STACK_CONFIG = 0x0000 (STAND-ALONE ONLY)	
—	Range	—	PHASE SHIFT	INTERLEAVE
Short to AGND	0x7F (127d)	Auto Detect	0	0x0020
Float	EEPROM (0x24h / 36d)	Auto Detect	0	0x0020
None	16d-31d	Auto detect	0	0x0020
0	16d-31d	Sync in	0	0x0040
1	32d-47d	Sync in	0	0x0040
2	16d-31d	Sync in	90	0x0041
3	32d-47d	Sync in	90	0x0041
4	16d-31d	Sync in	120	0x0031
5	32d-47d	Sync in	120	0x0031
6	16d-31d	Sync in	180	0x0042
7	32d-47d	Sync in	180	0x0042
8	16d-31d	Sync in	240	0x0032
9	32d-47d	Sync in	240	0x0032
10	16d-31d	Sync in	270	0x0043
11	32d-47d	Sync in	270	0x0043
12	16d-31d	Sync out	0	0x0020
13	32d-47d	Sync out	0	0x0020
14	16d-31d	Sync out	180	0x0042
15	32d-47d	Sync out	180	0x0042

The resistor to AGND for ADRSEL programs the device PMBus loop follower address according to Table 6-15:

Copyright © 2024 Texas Instruments Incorporated

Table 6-15. ADRSEL Resistor to AGND Code for Programming

RESISTOR TO AGND CODE	LOOP FOLLOWER ADDRESS (16-31 RANGE)	LOOP FOLLOWER ADDRESS (32-47 RANGE)
0	0x10h (16d)	0x20h (32d)
1	0x11h (17d)	0x21h (33d)
2	0x12h (18d)	0x22h (34d)
3	0x13h (19d)	0x23h (35d)
4	0x14h (20d)	0x24h (36d)
5	0x15h (21d)	0x25h (37d)
6	0x16h (22d)	0x26h (38d)
7	0x17h (23d)	0x27h (39d)
8	0x18h (24d)	0x48h (72d)
9	0x19h (25d)	0x29h (41d)
10	0x1Ah (26d)	0x2Ah (42d)
11	0x1Bh (27d)	0x2Bh (43d)
12	0x1Ch (28d)	0x2Ch (44d)
13	0x1Dh (29d)	0x2Dh (45d)
14	0x1Eh (30d)	0x2Eh (46d)
15	0x1Fh (31d)	0x2Fh (47d)

Note

When a TPSM8S6B24S device is configured as the loop controller of a multi-phase stack, the device always occupies the zero-degree position in *(37h) INTERLEAVE*, but the ADRSEL resistor divider can still be used to select Auto Detect, Forced SYNC_IN, and Forced SYNC_OUT. When the loop controller of a multi-phase stack is configured for SYNC_IN, all devices of the stack remain disabled until a valid external SYNC signal is provided.

6.5.2.5 Programming MSEL2 for a Loop Follower Device (GOSNS Tied to BP1V5)

Configuring a TPSM8S6B24S device as a loop follower disables all pinstraps except MSEL2, which programs *(37h) INTERLEAVE* for stacking and *(ECh) MFR_SPECIFIC_28 (STACK_CONFIG)*, *(4Ah) IOUT_OC_WARN_LIMIT*, and *(46h) IOUT_OC_FAULT_LIMIT* with a single resistor to AGND. Note that the loop controller is always device 0.

Table 6-16. Loop Follower MSEL2 Resistor to AGND Code for and Programming

RESISTOR TO AGND CODE	DEVICE NUMBER, NUMBER OF PHASES	IOUT_OC_WARN_LIMIT (A) / IOUT_OC_FAULT_LIMIT (A)
Short	Device 1, 2-phase	40/52
Float	Device 1, 2-phase	30/39
6	Device 1, 2-phase	40/52
7	Device1, 2-phase	30/39
4	Device 1, 3-phase	40/52
5	Device 1, 3-phase	30/39
8	Device 2, 3-phase	40/52
9	Device 2, 3-phase	30/39
2	Device 1, 4-phase	40/52
3	Device 1, 4-phase	30/39
14	Device 2, 4-phase	40/52
15	Device 2, 4-phase	30/39

Copyright © 2024 Texas Instruments Incorporated

Table 6-16. Loop Follower MSEL2 Resistor to AGND Code for and Programming (continued)

RESISTOR TO AGND CODE	DEVICE NUMBER, NUMBER OF PHASES	IOUT_OC_WARN_LIMIT (A) / IOUT_OC_FAULT_LIMIT (A)
10	Device 3, 4-phase	40/52
11	Device 3, 4-phase	30/39

Note

During the power-on sequence, device 0 (stack loop controller) reads back phase information from all connected loop followers, if any loop follower phase response does not match the *(ECh) MFR_SPECIFIC_28 (STACK_CONFIG)* results of the loop controller, the converter sets the POR fault bit in *(80h) STATUS_MFR_SPECIFIC* but does not allow conversion. After all connected devices respond to Device 0, Device 0 passes remaining pin-strap information to the Loop Followers to make sure of matched programming during operation. Adding an additional phase requires adjusting the MSEL2 resistors on the loop controller device and the MSEL2 resistor to ground on all other loop follower devices.

6.5.2.6 Pin-Strapping Resistor Configuration

Table 6-17 and Table 6-18 provide the bottom resistor (pin to AGND) values in ohms, and the top resistor (pin to BP1V5) values in ohms. Select the column with the desired R2G code in the top row and the row with the desired resistor divider code in the left most column. The Pin-to-AGND resistor value is the resistor value in the highlighted row in the first column under the desired R2G code. The Pin-to-BP1V5 resistor value, if used, is the resistor value in the row starting with the desired divider code in the left most column under the desired R2G code and resistor.

Table 6-17. Pin-Strapping Resistor (Ω) Table for R2G Codes 0-7

R2G code	0	1	2	3	4	5	6	7
Rbot →	4640	5620	6810	8250	10000	12100	14700	17800
Divider Code (↓)	Resistor to BP1V5 Value (Ω)							
0	21500	26100	31600	38300	46400	56200	68100	82500
1	15400	18700	22600	27400	33200	40200	48700	59000
2	11500	14000	16900	20500	24900	30100	36500	44200
3	9090	11000	13300	16200	19600	23700	28700	34800
4	7150	8660	10500	12700	15400	18700	22600	27400
5	5620	6810	8250	10000	12100	14700	17800	21500
6	4640	5620	6810	8250	10000	12100	14700	17800
7	3830	4640	5620	6810	8250	10000	12100	14700
8	3160	3830	4640	5620	6810	8250	10000	12100
9	2610	3160	3830	4640	5620	6810	8250	10000
10	2050	2490	3010	3650	4420	5360	6490	7870
11	1620	1960	2370	2870	3480	4220	5110	6190
12	1270	1540	1870	2260	2740	3320	4020	4870
13	953	1150	1400	1690	2050	2490	3010	3650
14	715	866	1050	1270	1540	1870	2260	2740
15	511	619	750	909	1100	1330	1620	1960

Table 6-18. Pin-Strapping Resistor (Ω) Table for R2G Codes 8-15

R2G code	8	9	10	11	12	13	14	15
Rbot →	21500	26100	31600	38300	46400	56200	68100	82500

Copyright © 2024 Texas Instruments Incorporated

Table 6-18. Pin-Strapping Resistor (Ω) Table for R2G Codes 8-15 (continued)

Divider Code (↓)	Resistor to BP1V5 Value (Ω)							
0	100000	121000	147000	178000	215000	261000	316000	402000
1	71500	86600	105000	127000	154000	187000	226000	274000
2	53600	64900	78700	95300	115000	140000	169000	205000
3	42200	51100	61900	75000	90900	110000	133000	162000
4	33200	40200	48700	59000	71500	86600	105000	127000
5	26100	31600	38300	46400	56200	68100	82500	100000
6	21500	26100	31600	38300	46400	56200	68100	82500
7	17800	21500	26100	31600	38300	46400	56200	68100
8	14700	17800	21500	26100	31600	38300	46400	56200
9	12100	14700	17800	21500	26100	31600	38300	46400
10	9530	11500	14000	16900	20500	24900	30100	26500
11	7500	9090	11000	13300	16200	19600	23700	28700
12	5900	7150	8660	10500	12700	15400	18700	22600
13	4420	5360	6490	7870	9530	11500	14000	16900
14	3320	4020	4870	5900	7150	8660	10500	12700
15	2370	2870	3480	4220	5110	6190	7500	9090

Copyright © 2024 Texas Instruments Incorporated

7 Register Maps

7.1 Conventions for Documenting Block Commands

According to the SMBus specification, block commands are transmitted across the PMBus interface in ascending order. The description below shows the convention this document follows for documenting block commands.

This document follows the convention for byte ordering of block commands:

When block values are listed as register map tables, they are listed in byte order from top to bottom starting with Byte N and ending with Byte 0.

- Byte 0 (first byte sent) corresponds to bits 7:0.
- Byte 1 (second byte sent) corresponds to bits 15:8.
- Byte 2 (third byte sent) corresponds to bits 23:16.
- … and so on

When block values are listed as text in hexadecimal, they are listed in byte order, from left to right, starting with Byte 0 and ending with Byte N with a space between each byte of the value. In block 54 49 54 6D 24 62h, the byte order is:

- Byte 0, bits 7:0, = 54h
- Byte 1, bits 15:8, = 49h
- Byte 2, bits 23:16, = 6Dh
- Byte 3, bits 31:24, = 24h
- Byte 4, bits 39:32, = 62h

Figure 7-1. Block Command Byte Ordering

47	46	45	44	43	42	41	40
RW	RW	RW	RW	RW	RW	RW	RW
Byte N							
39	38	37	36	35	34	33	32
RW	RW	RW	RW	RW	RW	RW	RW
Byte …							
31	30	29	28	27	26	25	24
RW	RW	RW	RW	RW	RW	RW	RW
Byte 3							
23	22	21	20	19	18	17	16
RW	RW	RW	RW	RW	RW	RW	RW
Byte 2							
15	14	13	12	11	10	9	8
RW	RW	RW	RW	RW	RW	RW	RW
Byte 1							
7	6	5	4	3	2	1	0
RW	RW	RW	RW	RW	RW	RW	RW
Byte 0							

LEGEND: R/W = Read/Write; R = Read only

Copyright © 2024 Texas Instruments Incorporated

7.2 (01h) OPERATION

CMD Address	01h
Write Transaction:	Write Byte
Read Transaction:	Read Byte
Format:	Unsigned Binary (1 byte)
Phased:	No
NVM Back-up:	No
Updates:	On-the-fly

The (01h) OPERATION command is used to enable or disable power conversion, in conjunction input from the enable pins, according to the configuration of the (02h) ON_OFF_CONFIG command. It is also used to set the output voltage to the upper or lower MARGIN levels, and select soft-stop.

Figure 7-2. (01h) OPERATION Register Map

7	6	5	4	3	2	1	0
RW	RW	RW	RW	RW	RW	RW	R
ON_OFF	SOFT_OFF	MARGIN				TRANSITION	0

LEGEND: R/W = Read/Write; R = Read only

Table 7-1. Register Field Descriptions

Bit	Field	Access	Reset	Description
7	ON_ OFF	RW	0b	Enable/disable power conversion when the (02h) ON_OFF_CONFIG command is configured to require input from the CMD bit for output control. Note that there can be several other requirements that must be satisfied before the power conversion can begin (for example, input voltages above UVLO thresholds, enable pins high if required by (02h) ON_OFF_CONFIG and so forth). 0b: Disable power conversion. 1b: Enable power conversion and enable Ignore Faults on MARGIN.
6	SOFT_ OFF	RW	0b	This bit controls the turn-off profile when (02h) ON_OFF_CONFIG is configured to require input from the CMD bit for output voltage control and OPERATION bit 7 transitions from 1b to 0b is ignored when bit 7 is 1b. 0b: Immediate Off. Power conversion stops immediately and the power stage is forced to a high-Z state. 1b: Soft Off. Power conversion continues for the TOFF_ DELAY time, then the output voltage is ramped down to 0 V at a slew rate according to TOFF_ FALL. After the output voltage reaches 0 V, power conversions stops.
5:2	MARGIN	RW	0000b	Sets the margin state. 0000b, 0001b, 0010b: Margin OFF. Output voltage target is (21h) VOUT_COMMAND, OV/UV faults behave normally per their respective fault response settings 0. 0101b: Margin Low (Ignore Fault if bit 7 is 1b). Output voltage target is VOUT_MARGIN_LOW. OV/UV faults are ignored and do not trigger shut-down or STATUS updates. 0110b: Margin Low (Act on Fault). Output voltage target is (26h) VOUT_MARGIN_LOW. OV/UV faults trigger per their respective fault response settings. 1001b: Margin High (Ignore Fault). Output voltage target is VOUT_MARGIN_HIGH. OV/UV trigger are ignored and do not trigger shutdown or STATUS update. 1010b: Margin High (Act on Fault). Output voltage target is (25h) VOUT_MARGIN_HIGH. OV/UV trigger per their respective fault response settings. Other: Invalid/Unsupported data
1	TRANSITION	R	0b	Not used and always set to 0.
0	Reserved	R	0b	Not used and always set to 0.

Copyright © 2024 Texas Instruments Incorporated

Attempts to write (01h) OPERATION to any value other than those listed above will be considered invalid/unsupported data and cause the TPSM8S6B24S to respond by flagging the appropriate status bits, and notifying the host according to the PMBus 1.3.1 Part II specification, section 10.9.3.

Copyright © 2024 Texas Instruments Incorporated

7.3 (02h) ON_OFF_CONFIG

CMD Address	02h
Write Transaction:	Write Byte
Read Transaction:	Read Byte
Format:	Unsigned Binary (1 byte)
Phased:	No
NVM Back-up:	EEPROM
Updates:	On-the-fly

The (02h) ON_OFF_CONFIG command configures the combination of enable pin input and serial bus commands needed to enable/disable power conversion. This includes how the unit responds when power is applied to PVIN.

Figure 7-3. (02h) ON_OFF_CONFIG Register Map

7	6	5	4	3	2	1	0
R	R	R	RW	RW	RW	RW	RW
0	0	0	PU	CMD	CP	POLARITY	DELAY

LEGEND: R/W = Read/Write; R = Read only

Table 7-2. Register Field Descriptions

Bit	Field	Access	Reset	Description
7:5	Reserved	R	000b	Not used and always set to 0.
4	PU	RW	NVM	0b: Unit starts power conversion any time the input power is present regardless of the state of the CONTROL pin. 1b: Act on CONTROL. (01h) OPERATION command to start/stop power conversion, or both.
3	CMD	RW	NVM	0b: Ignore (01h) OPERATION Command to start/stop power conversion. 1b: Act on (01h) OPERATION Command (and CONTROL pin if configured by CP) to start/stop power conversion.
2	CP	RW	NVM	0b: Ignore CONTROL pin to start/stop power conversion. The UVLO function of the EN/UVLO pin is not active when CONTROL pin is ignored. 1b: Act on CONTROL pin (and (01h) OPERATION Command if configured by bit [3]) to start/stop power conversion.
1	POLARITY	RW	NVM	0b: CONTROL pin has active low polarity. The UVLO function of the EN/UVLO pin cannot be used when CONTROL has active low polarity. 1b: CONTROL pin has active high polarity.
0	DELAY	RW	NVM	0b: When power conversion is commanded OFF by the CONTROL pin (must be configured to respect the CONTROL pin as above), continue regulating for the (64h) TOFF_DELAY time, then ramp the output voltage to 0 V, in the time defined by (65h) TOFF_FALL. 1b: When power conversion is commanded OFF by the CONTROL pin (must be configured to respect the CONTROL pin as above), stop power conversion immediately.

For the purposes of (02h) ON_OFF_CONFIG, the device pin EN/UVLO is the CONTROL pin.

Attempts to write (02h) ON_OFF_CONFIG to any value other than those explicitly listed above will be considered invalid/unsupported data and cause the TPSM8S6B24S to respond by flagging the appropriate status bits, and notifying the host according to the PMBus 1.3.1 Part II specification, section 10.9.3.

Copyright © 2024 Texas Instruments Incorporated

7.4 (03h) CLEAR_FAULTS

CMD Address	03h
Write Transaction:	Send Byte
Read Transaction:	N/A
Format:	Data-less
Phased:	Yes
NVM Back-up:	No
Updates:	On-the-fly

CLEAR_FAULTS is a phased command used to clear any fault bits that have been set. This command simultaneously clears all bits in all status registers of the selected phase, or all phases if PHASE = FFh. At the same time, the device releases its SMB_ALERT# signal output if SMB_ALERT# is asserted. CLEAR_FAULTS is a write-only command with no data.

The CLEAR_FAULTS command does not cause a unit that has latched off for a fault condition to restart. If the fault is still present when the bit is cleared, the fault bit is immediately set again and the host is notified by the usual means.

If the device responds to an Alert Response Address (ARA) from the host, it will clear SMB_ALERT# but not the offending status bit or bits (as it has successfully notified the host and then expects the host to handle the interrupt appropriately). The original fault and any from other sources that occur between the initial assertion of SMB_ALERT# and the successful response of the device to the ARA are cleared (through CLEAR_FAULTS, OFF-ON toggle, or power reset) before any of these sources are allowed to re-trigger SMB_ALERT#. However, fault sources which only become active post-ARA trigger SMB_ALERT#.

Figure 7-4. (03h) CLEAR_FAULTS Register Map

7	6	5	4	3	2	1	0
W	W	W	W	W	W	W	W
CLEAR_FAULTS							

LEGEND: R/W = Read/Write; R = Read only

7.5 (04h) PHASE

CMD Address	04h
Write Transaction:	Write Byte
Read Transaction:	Read Byte
Format:	Unsigned Binary (1 byte)
Phased:	No
NVM Back-up:	No
Updates:	On-the-fly

The PHASE command provides the ability to configure, control, and monitor individual phases. Each PHASE contains the Operating Memory and User Store and Default Store for each phase output. The phase selected by the PHASE command will be used for all subsequent phase-dependent commands. The phase configuration needs to be established before any phase-dependent command can be successfully executed.

In the TPSM8S6B24S, each PHASE is a separate device. The loop and PMBus loop controller device, GOSNS/ Loop Follower connected to ground, will always be PHASE = 00h. Loop follower devices, GOSNS/loop follower connected to BP1V5, have their phase assignment defined by their phase position, as defined by INTERLEAVE or MSEL2

Figure 7-5. (04h) PHASE Register Map

7	6	5	4	3	2	1	0
RW	RW	RW	RW	RW	RW	RW	RW
PHASE							

LEGEND: R/W = Read/Write; R = Read only

Table 7-3. Register Field Descriptions

Bit	Field	Access	Reset	Description
7:0	PHASE	RW	FFh	00h: All commands address Phase 1. 01h: All commands address Phase 2. 02h: All commands address Phase 3. 03h: All commands address Phase 4. 04h-FEh: Unsupported/Invalid data FFh: Commands are addressed to all phases as a single entity. See the following text for more information.

The range of valid data for PHASE also depends on the phase configuration. Attempts to write (04h) PHASE to a value not supported by the current phase configuration will be considered invalid/unsupported data and cause the TPSM8S6B24S to respond by flagging the appropriate status bits and notifying the host according to the PMBus 1.3.1 Part II specification, section 10.9.3.

Copyright © 2024 Texas Instruments Incorporated

7.6 (10h) WRITE_PROTECT

CMD Address	10h
Write Transaction:	Write Byte
Read Transaction:	Read Byte
Format:	Unsigned Binary (1 byte)
Phased:	No
NVM Back-up:	EEPROM
Updates:	On-the-fly

The WRITE_PROTECT command controls writing to the PMBus device. The intent of this command is to provide protection against accidental changes; it has one data byte that is described below. This command does NOT provide protection against deliberate or malicious changes to a configuration or operation of the device. All supported commands can have their parameters read, regardless of the WRITE_PROTECT settings.

Figure 7-6. (10h) WRITE_PROTECT Register Map

7	6	5	4	3	2	1	0
RW	RW	RW	RW	RW	RW	RW	RW
WRITE_PROTECT							

LEGEND: R/W = Read/Write; R = Read only

Table 7-4. Register Field Descriptions

Bit	Field	Access	Reset	Description
7:0	WRITE_ PROTECT	RW	NVM	00h: Enable writes to all commands. 20h: Disables all write access except to the WRITE_ PROTECT, OPERATION, ON_ OFF_ CONFIG, STORE_USER_ALL, and VOUT_ COMMAND commands. 40h: Disables all WRITES except to the WRITE_ PROTECT, OPERATION, and STORE_USER_ALL commands. 80h: Disables all WRITES except to the WRITE_ PROTECT and STORE_USER_ALL commands. Other: Invalid/Unsupported data

Attempts to write (10h) WRITE_PROTECT to any invalid value as specified above will be considered invalid/unsupported data and cause the TPSM8S6B24S to respond by flagging the appropriate status bits, and notifying the host according to the PMBus 1.3.1 Part II specification, section 10.9.3.

Copyright © 2024 Texas Instruments Incorporated

7.7 (15h) STORE_USER_ALL

CMD Address	15h
Write Transaction:	Send Byte
Read Transaction:	N/A
Format:	Data-less
Phased:	No, PHASE = FFh only
NVM Back-up:	No
Updates:	Not recommended for on-the-fly-use, but not explicitly blocked

The STORE_USER_ALL command instructs the PMBus device to copy the entire contents of the Operating Memory to the matching locations in the non-volatile User Store memory. Any items in Operating Memory that do not have matching locations in the User Store are ignored.

NVM Store operations are not recommended while the output voltages are in regulation, although the user is not explicitly prevented from doing so, as interruption can result in a corrupted NVM. PMBus commands issued during this time can cause long clock stretch times, or simply be ignored. TI recommends disabling regulation, and waiting a minimum of 100 ms before continuing, following issuance of NVM store operations.

To prevent storing mismatched register values to NVM, STORE_USER_ALL must not be used unless PHASE = FFh.

Figure 7-7. (15h) STORE_USER_ALL Register Map

7	6	5	4	3	2	1	0
W	W	W	W	W	W	W	W
STORE_USER_ALL							

LEGEND: R/W = Read/Write; R = Read only

Copyright © 2024 Texas Instruments Incorporated

7.8 (16h) RESTORE_USER_ALL

CMD Address	16h
Write Transaction:	Send Byte
Read Transaction:	N/A
Format:	Data-less
Phased:	No, PHASE = FFh only
NVM Back-up:	No
Updates:	Disables Regulation during RESTORE

The RESTORE_USER_ALL command instructs the PMBus device to disable operation and copy the entire contents of the non-volatile User Store memory to the matching locations in the Operating Memory, then Overwrite Operating Memory of any commands selected in PIN_DETECT_OVERRIDE with their last read pin-detected values. The values in the Operating Memory are overwritten by the value retrieved from the User Store and Pin Detection. Any items in User Store that do not have matching locations in the Operating Memory are ignored.

To prevent storing mismatched register values to NVM, RESTORE_USER_ALL must not be used unless PHASE = FFh.

Figure 7-8. (16h) RESTORE_USER_ALL Register Map

7	6	5	4	3	2	1	0
W	W	W	W	W	W	W	W
RESTORE_USER_ALL							

LEGEND: R/W = Read/Write; R = Read only

7.9 (19h) CAPABILITY

CMD Address	19h
Write Transaction:	N/A
Read Transaction:	Read Byte
Format:	Unsigned Binary (1 byte)
Phased:	No
NVM Back-up:	No
Updates:	N/A

This command provides a way for the host to determine the capabilities of this PMBus device. This command is read-only and has one data byte formatted as below.

Figure 7-9. (19h) CAPABILITY Register Map

7	6	5	4	3	2	1	0
R	R	R	R	R	R	R	R
PEC	SPEED		ALERT	FORMAT	AVSBUS	0	0

LEGEND: R/W = Read/Write; R = Read only

Table 7-5. Register Field Descriptions

Bit	Field	Access	Reset	Description
7	PEC	R	1b	1b: Packet Error Checking is supported.
6:5	SPEED	R	10b	10b: Maximum supported bus speed is 1 MHz.
4	ALERT	R	1b	1b: The device has an SMB_ALERT# pin and supports the SMBus Alert Response Protocol.
3	FORMAT	R	0b	0b: Numeric format is LINEAR or DIRECT.
2	AVSBUS	R	0b	0b: AVSBus is NOT supported.
1:0	Reserved	R	00b	Reserved and always set to 0.

Attempts to write (19h) CAPABILITY to any value will be considered invalid/unsupported data and cause the TPSM8S6B24S to respond by flagging the appropriate status bits and notifying the host according to the PMBus 1.3.1 Part II specification, section 10.9.3.

Copyright © 2024 Texas Instruments Incorporated

7.10 (1Bh) SMBALERT_MASK

CMD Address	1Bh
Write Transaction:	Write Word
Read Transaction:	Block-Write/Block-Read Process Call
Format:	Write: Unsigned Binary (2 bytes)Read: Unsigned Binary (1 byte)
Phased:	No, Only PHASE = FFh is supported
NVM Back-up:	EEPROM
Updates:	On-the-fly

The SMBALERT_MASK command can be used to prevent a warning or fault condition from asserting the SMBALERT# signal. Setting a MASK bit does not prevent the associated bit in the STATUS_CMD from being set, but prevents the associated bit in the STATUS_CMD from asserting SMB_ALERT#. See Reference [3] for more information on the command format. The following register descriptions describe the individual mask bits available.

SMBALERT_MASK Write Transaction = Write Word. CMD = 1Bh, Low =STATUS_CMD, High=MASK

SMBALERT_MASK Read Transaction = Block-Write/Block-Read Process Call. Write 1 byte block with STATUS_CMD, read 1 byte block.

Copyright © 2024 Texas Instruments Incorporated

7.11 (1Bh) SMBALERT_MASK_VOUT

CMD Address	1Bh (with CMD byte = 7Ah)
Write Transaction:	Write Word
Read Transaction:	Block-Write/Block-Read Process Call
Format:	Unsigned Binary (1 byte)
Phased:	No, Only PHASE = FFh is supported
NVM Back-up:	EEPROM
Updates:	On-the-fly

SMBALERT_MASK bits for the STATUS_VOUT command

Figure 7-10. (1Bh) SMBALERT_MASK_VOUT Register Map

7	6	5	4	3	2	1	0
RW	RW	RW	RW	RW	RW	R	R
mVOUT_OVF	mVOUT_OVW	mVOUT_UVW	mVOUT_UVF	mVOUT_MINMAX	mTON_MAX	0	0

LEGEND: R/W = Read/Write; R = Read only

Table 7-6. Register Field Descriptions

Bit	Field	Access	Reset	Description
7	mVOUT_OVF	RW	NVM	0b: SMBALERT may assert due to this condition. 1b: SMBALERT may NOT assert due to this condition.
6	mVOUT_OVW	RW	NVM	0b: SMBALERT may assert due to this condition. 1b: SMBALERT may NOT assert due to this condition.
5	mVOUT_UVW	RW	NVM	0b: SMBALERT may assert due to this condition. 1b: SMBALERT may NOT assert due to this condition.
4	mVOUT_UVF	RW	NVM	0b: SMBALERT may assert due to this condition. 1b: SMBALERT may NOT assert due to this condition.
3	mVOUT_MINMAX	RW	NVM	0b: SMBALERT may assert due to this condition. 1b: SMBALERT may NOT assert due to this condition.
2	mTON_MAX	RW	NVM	0b: SMBALERT may assert due to this condition. 1b: SMBALERT may NOT assert due to this condition.
1:0	Not supported	R	00b	Not supported and always set to 00b.

Copyright © 2024 Texas Instruments Incorporated

7.12 (1Bh) SMBALERT_MASK_IOUT

CMD Address	1Bh (with CMD byte = 7Bh)
Write Transaction:	Write Word
Read Transaction:	Block-Write/Block-Read Process Call
Format:	Unsigned Binary (1 byte)
Phased:	No, Only PHASE = FFh is supported
NVM Back-up:	EEPROM
Updates:	On-the-fly

SMBALERT_MASK bits for STATUS_IOUT

Figure 7-11. (1Bh) SMBALERT_MASK_IOUT Register Map

7	6	5	4	3	2	1	0
RW	R	RW	RW	R	R	R	R
mIOUT_OCF	0	mIOUT_OCW	mIOUT_UCF	0	0	0	0

LEGEND: R/W = Read/Write; R = Read only

Table 7-7. Register Field Descriptions

Bit	Field	Access	Reset	Description
7	mIOUT_OCF	RW	NVM	0b: SMBALERT may assert due to this condition. 1b: SMBALERT may NOT assert due to this condition.
6	Not supported	R	0b	Not supported
5	mIOUT_OCW	RW	NVM	0b: SMBALERT may assert due to this condition. 1b: SMBALERT may NOT assert due to this condition.
4	mIOUT_UCF	RW	NVM	1b: SMBALERT may NOT assert due to this condition.
3	Not supported	R	0b	Not supported
2:0	Not supported	RW	0b	Not supported

Copyright © 2024 Texas Instruments Incorporated

7.13 (1Bh) SMBALERT_MASK_INPUT

CMD Address	1Bh (with CMD byte = 7Ch)
Write Transaction:	Write Word
Read Transaction:	Block-Write/Block-Read Process Call
Format:	Unsigned Binary (1 byte)
Phased:	No, Only PHASE = FFh is supported
NVM Back-up:	EEPROM
Updates:	On-the-fly

SMBALERT_MASK bits for STATUS_INPUT

Figure 7-12. (1Bh) SMBALERT_MASK_INPUT Register Map

7	6	5	4	3	2	1	0
R	R	R	R	RW	R	R	R
0	0	0	0	mLOW_VIN	0	0	0

LEGEND: R/W = Read/Write; R = Read only

Table 7-8. Register Field Descriptions

Bit	Field	Access	Reset	Description
7	Not supported	R	0b	Not supported
6	Not supported	R	0b	Not supported
5	Not supported	R	0b	Not supported
4	Not supported	R	0b	Not supported
3	mLOW_ VIN	RW	NVM	0b: SMBALERT may assert due to this condition. 1b: SMBALERT may NOT assert due to this condition.
2	Not supported	R	0b	Not supported
1	Not supported	R	0b	Not supported
0	Not supported	R	0b	Not supported

Copyright © 2024 Texas Instruments Incorporated

7.14 (1Bh) SMBALERT_MASK_TEMPERATURE

CMD Address	1Bh (with CMD byte = 7Dh)
Write Transaction:	Write Word
Read Transaction:	Block-Write/Block-Read Process Call
Format:	Unsigned Binary (1 byte)
Phased:	No, Only PHASE = FFh is supported
NVM Back-up:	EEPROM
Updates:	On-the-fly

SMBALERT_MASK bits for STATUS_TEMPERATURE

Figure 7-13. (1Bh) SMBALERT_MASK_TEMPERATURE Register Map

7	6	5	4	3	2	1	0
RW	RW	R	R	R	R	R	R
mOTF	mOTW	0	0	0	0	0	0

LEGEND: R/W = Read/Write; R = Read only

Table 7-9. Register Field Descriptions

Bit	Field	Access	Reset	Description
7	mOTF	RW	NVM	0b: SMBALERT may assert due to this condition. 1b: SMBALERT may NOT assert due to this condition.
6	mOTW	RW	NVM	0b: SMBALERT may assert due to this condition. 1b: SMBALERT may NOT assert due to this condition.
5:0	Not supported	R	0d	Not supported and always set to 000000b.

Copyright © 2024 Texas Instruments Incorporated

7.15 (1Bh) SMBALERT_MASK_CML

CMD Address	1Bh (with CMD byte = 7Eh)
Write Transaction:	Write Word
Read Transaction:	Block-Write/Block-Read Process Call
Format:	Unsigned Binary (1 byte)
Phased:	No, Only PHASE = FFh is supported
NVM Back-up:	EEPROM
Updates:	On-the-fly

SMBALERT_MASK bits for STATUS_CML

Figure 7-14. (1Bh) SMBALERT_MASK_CML Register Map

7	6	5	4	3	2	1	0
RW	RW	RW	RW		R	RW	R
mIVC	mIVD	mPEC	mMEM		0	mCOMM	0

LEGEND: R/W = Read/Write; R = Read only

Table 7-10. Register Field Descriptions

Bit	Field	Access	Reset	Description
7	mIVC	RW	NVM	0b: SMBALERT may assert due to this condition. 1b: SMBALERT may NOT assert due to this condition.
6	mIVD	RW	NVM	0b: SMBALERT may assert due to this condition. 1b: SMBALERT may NOT assert due to this condition.
5	mPEC	RW	NVM	0b: SMBALERT may assert due to this condition. 1b: SMBALERT may NOT assert due to this condition.
4	mMEM	RW	NVM	0b: SMBALERT may assert due to this condition. 1b: SMBALERT may NOT assert due to this condition.
3:2	Not supported	R	00b	Not supported
1	mCOMM	RW	NVM	0b: SMBALERT may assert due to this condition. 1b: SMBALERT may NOT assert due to this condition.
0	Not supported	R	0b	Not supported

Copyright © 2024 Texas Instruments Incorporated

7.16 (1Bh) SMBALERT_MASK_OTHER

CMD Address	1Bh (with CMD byte = 7Fh)
Write Transaction:	Write Word
Read Transaction:	Block-Write/Block-Read Process Call
Format:	Unsigned Binary (1 byte)
Phased:	No
NVM Back-up:	EEPROM
Updates:	On-the-fly

SMBALERT_MASK bits for STATUS_OTHER

Figure 7-15. (1Bh) SMBALERT_MASK_OTHER Register Map

7	6	5	4	3	2	1	0
R	R	R	R	R	R	R	R
0	0	0	0	0	0	0	mFIRST_ TO_ALERT

LEGEND: R/W = Read/Write; R = Read only

Table 7-11. Register Field Descriptions

Bit	Field	Access	Reset	Description
7:1	Not supported	R	0h	Not supported
0	mFIRST_ TO_ ALERT	R	1b	The FIRST_ TO_ ALERT bit does not in itself generate SMBALERT assertion, hence this bit is hard-coded to 1b (source is masked).

Copyright © 2024 Texas Instruments Incorporated

7.17 (1Bh) SMBALERT_MASK_MFR

CMD Address	1Bh (with CMD byte = 80h)
Write Transaction:	Write Word
Read Transaction:	Block-Write/Block-Read Process Call
Format:	Unsigned Binary (1 byte)
Phased:	No
NVM Back-up:	EEPROM
Updates:	On-the-fly

SMBALERT_MASK bits for STATUS_MFR

Figure 7-16. (1Bh) SMBALERT_MASK_MFR Register Map

7	6	5	4	3	2	1	0
RW	RW	R	R	RW	RW	RW	R
mPOR	mSELF	0	0	mRESET	mBCX	mSYNC	0

LEGEND: R/W = Read/Write; R = Read only

Table 7-12. Register Field Descriptions

Bit	Field	Access	Reset	Description
7	mPOR	RW	NVM	0b: SMBALERT may assert due to this condition. 1b: SMBALERT may NOT assert due to this condition.
6	mSELF	RW	NVM	0b: SMBALERT may assert due to this condition. 1b: SMBALERT may NOT assert due to this condition. Due to variations in AVIN UVLO, unmasking this bit can result in SMBALERT being asserted on power up.
5	Not supported	R	0b	Not supported
4	Not supported	R	0b	Not supported
3	mRESET	RW	NVM	0b: SMBALERT may assert due to this condition. 1b: SMBALERT may NOT assert due to this condition.
2	mBCX	RW	NVM	0b: SMBALERT may assert due to this condition. 1b: SMBALERT may NOT assert due to this condition.
1	mSYNC	RW	NVM	0b: SMBALERT may assert due to this condition. 1b: SMBALERT may NOT assert due to this condition. When the Loop Controller device of a multi-phase stack is programmed for Auto Detect SYNC, unmasking this bit can result in a momentary assertion of SMBALERT when the multi-phase stack is enabled.
0	Not supported	R	0b	Not supported

Copyright © 2024 Texas Instruments Incorporated

7.18 (20h) VOUT_MODE

CMD Address	20h
Write Transaction:	Write Byte
Read Transaction:	Read Byte
Format:	Unsigned Binary (1 byte)
Phased:	No
NVM Back-up:	EEPROM
Updates:	Conversion Disabled: on-the-fly, Conversion Enabled: Read Only

The data byte for the VOUT_MODE command is one byte that consists of a three bit Mode and a five bit Parameter as shown in Figure 7-17. The three bit Mode sets whether the device uses the ULINEAR16, Half-precision IEEE 754 floating point, or VID or DIRECT modes for output voltage related commands. The five bit Parameter provides more information about the selected mode, such as the ULINEAR16 Exponent or which manufacturer's VID codes are being used.

Figure 7-17. (20h) VOUT_MODE Register Map

7	6	5	4	3	2	1	0
RW	R	R	RW	RW	RW	RW	RW
REL	MODE		PARAMETER				

LEGEND: R/W = Read/Write; R = Read only

Table 7-13. Register Field Descriptions

Bit	Field	Access	Reset	Description
7	REL	RW	NVM	0b: Absolute Data Format 1b: Relative Data Format
6:5	MODE	R	00b	00b: Linear Format (ULINEAR16, SLINEAR16) Other: Unsuported/Invalid
4:0	PARAMETER	RW	NVM	MODE = 00b (Linear Format): Specifies the exponent “N” to use with output voltage related commands, in two’s complement format. Supported exponent values in the linear mode range from -4 (62.5 mV/LSB) to -12 (0.244 mV/LSB). Refer to the following text for more information.

Changing VOUT_MODE

Changing VOUT_MODE will force an update to the values of many VOUT related commands to conform to the updated VOUT_MODE value including Relative versus Absolute mode and the linear Exponent value. When programming VOUT_MODE in conjunction with other VOUT related commands, VOUT related commands will be interpreted with the current VOUT_MODE value and converted if VOUT_MODE is later changed.

Copyright © 2024 Texas Instruments Incorporated

7.19 (21h) VOUT_COMMAND

CMD Address	21h
Write Transaction:	Write Word
Read Transaction:	Read Word
Format:	ULINEAR16, Absolute Only per VOUT_MODE
Phased:	No
NVM Back-up:	EEPROM or Pin Detection
Updates:	on-the-fly

VOUT_COMMAND causes the device to set its output voltage to the commanded value with two data bytes. Output voltage changes due to VOUT_COMMAND occur at the rate specified by VOUT_TRANSITION_RATE.

When PGD/RST_B is configured as a RESET# pin in MISC_OPTIONS, assertion of the PGD/RST_B pin causes the output voltage to return to the VBOOT value, and causes the VOUT_COMMAND value to be updated accordingly.

Figure 7-18. (21h) VOUT_COMMAND Register Map

15	14	13	12	11	10	9	8
RW	RW	RW	RW	RW	RW	RW	RW
VOUT_COMMAND (High Byte)							
7	6	5	4	3	2	1	0
RW	RW	RW	RW	RW	RW	RW	RW
VOUT_COMMAND (Low Byte)							

LEGEND: R/W = Read/Write; R = Read only

Table 7-14. Register Field Descriptions

Bit	Field	Access	Reset	Description
15:0	VOUT_COMMAND	RW	NVM	Sets the output voltage target via the PMBus interface.

At power up, the reset value of VOUT_COMMAND is derived from either pin-detection on the VSEL pin, or from the NVM, depending on the VOUT_COMMAND bit in PIN_DETECT_OVERRIDE.

When the VOUT_COMMAND bit in PIN_DETECT_OVERRIDE = 0b, the default value of VOUT_COMMAND is restored from NVM at Power On Reset or RESTORE_USER_ALL.

When the VOUT_COMMAND bit in PIN_DETECT_OVERRIDE = 1b, the default value of VOUT_COMMAND is derived from pin-detection on the VSEL pin, at Power-On Reset or RESTORE_USER_ALL.

This default value, whether derived from pin detection, or NVM becomes the “default” output voltage (also referred to as “VBOOT”), and is stored in RAM separately from the current value of VOUT_COMMAND.

BOOT Voltage Behavior

The RESET_FLT bit in MISC_OPTIONS selects the VOUT_COMMAND behavior following a fault-related shutdown. When RESET_FLT = 0b, the device will retain the current value of VOUT_COMMAND during HICCUP after a fault. When RESET_FLT = 1b, VOUT_COMMAND will reset to the last detected VSEL voltage or the NVM STORED value for VOUT_COMMAND as selected by the VOUT_COMMAND bit in MISC_OPTIONS.

Data Validity

Writes to VOUT_COMMAND for which the resulting value, including any offset from VOUT_TRIM is greater than the current VOUT_MAX, or less than the current VOUT_MIN, causes the reference DAC to move to the

Copyright © 2024 Texas Instruments Incorporated

value specified by VOUT_MIN or VOUT_MAX respectively, and causes the VOUT_MAX_MIN_WARNING fault condition, setting the appropriate bits in STATUS_WORD, STATUS_VOUT and notifying the host per the PMBus 1.3.1 Part II specification, section 10.2.

Copyright © 2024 Texas Instruments Incorporated

7.20 (22h) VOUT_TRIM

CMD Address	22h
Write Transaction:	Write Word
Read Transaction:	Read Word
Format:	SLINEAR16, Absolute Only per (20h) VOUT_MODE.
Phased:	No
NVM Back-up:	EEPROM
Updates:	on-the-fly

VOUT_TRIM is used to apply a fixed offset voltage to the output voltage command value. Output voltage changes due to VOUT_TRIM occur at the rate specified by (27h) VOUT_TRANSITION_RATE.

Figure 7-19. (22h) VOUT_TRIM Register Map

15	14	13	12	11	10	9	8
RW	RW	RW	RW	RW	RW	RW	RW
VOUT_TRIM (High Byte)							
7	6	5	4	3	2	1	0
RW	RW	RW	RW	RW	RW	RW	RW
VOUT_TRIM (Low Byte)							

LEGEND: R/W = Read/Write; R = Read only

Table 7-15. Register Field Descriptions

Bit	Field	Access	Reset	Description
15:0	VOUT_TRIM	RW	See Below	Output voltage offset. SLINEAR16 (two's complement) format

Limited NVM Backup

Only 8 bits of NVM backup are provided for this command. While the VOUT_TRIM command follows the (20h) VOUT_MODE exponent, NVM back-up is stored with an exponent -12 and stored values will be limited to +127 to -128 with an exponent -12 irrespective of (20h) VOUT_MODE.

Data Validity

Referring to the data validity table in (21h) VOUT_COMMAND (reproduced below), the output voltage value (including any offset from VOUT_TRIM, VOUT_COMMAND, VOUT_MARGIN, …) may not exceed the values supported by the DAC hardware.

Programming a (21h) VOUT_COMMAND + (22h) VOUT_TRIM value greater than the maximum value supported by the DAC hardware but less than (24h) VOUT_MAX will result in the regulated output voltage clamping at the maximum value supported by the DAC hardware without setting the VOUT_MAX_MIN bit in (7Ah) STATUS_VOUT.

Table 7-16. VOUT_COMMAND/VOUT_MARGIN + VOUT_TRIM Data Validity (Linear Format)

VOUT_SCALE_LOOP	INTERNAL DIVIDER	VALID VOUT_COMMAND /MARGIN + VOUT_TRIM VALUES
1.0	None	0.000V to 0.700 V
0.5	1:1	0.000 V to 1.400 V
0.25	1:3	0.000 V to 2.800 V
0.125	1:7	0.000 V to 6.000 V

Copyright © 2024 Texas Instruments Incorporated

The minimum and maximum valid data values for VOUT_TRIM follow the description in (21h) VOUT_COMMAND. Attempts to write VOUT_TRIM to any value outside those specified as valid, will be considered invalid/unsupported data and cause the TPSM8S6B24S to respond by flagging the appropriate status bits, and notifying the host according to the PMBus 1.3.1 Part II specification section 10.9.3.

Writes to VOUT_TRIM for which the resulting output voltage is greater than the current (24h) VOUT_MAX, or less than the current (2Bh) VOUT_MIN, cause the reference DAC to move to the value specified by (2Bh) VOUT_MIN or (24h) VOUT_MAX, respectively, and cause the VOUT_MAX_MIN_WARNING fault condition, setting the appropriate bits in (79h) STATUS_WORD, (7Ah) STATUS_VOUT and notifying the host per the PMBus 1.3.1 Part II specification, section 10.2.

Copyright © 2024 Texas Instruments Incorporated

7.21 (24h) VOUT_MAX

CMD Address	24h
Write Transaction:	Write Word
Read Transaction:	Read Word
Format:	ULINEAR16, Absolute Only per VOUT_MODE
Phased:	No
NVM Back-up:	EEPROM or Pin Detection
Updates:	On-the-fly

The VOUT_MAX command sets an upper limit on the output voltage the unit and can command regardless of any other commands or combinations. The intent of this command is to provide a safeguard against a user accidentally setting the output voltage to a possibly destructive level.

Figure 7-20. (24h) VOUT_MAX Register Map

15	14	13	12	11	10	9	8
RW	RW	RW	RW	RW	RW	RW	RW
VOUT_MAX (High Byte)							
7	6	5	4	3	2	1	0
RW	RW	RW	RW	RW	RW	RW	RW
VOUT_MAX (Low Byte)							

LEGEND: R/W = Read/Write; R = Read only

Table 7-17. Register Field Descriptions

Bit	Field	Access	Reset	Description
15:0	VOUT_MAX	RW	NVM	Maximum output voltage. ULINEAR16 absolute per the setting of VOUT_ MODE. Refer to the following description for data validity.

While conversion is enabled, any output voltage change (including VOUT_COMMAND, VOUT_TRIM, margin operations) that causes the new target voltage to be greater than the current value of VOUT_MAX will cause the VOUT_MAX_MIN_WARNING fault condition. This result causes the TPSM8S6B24S to:

- Set to the output voltage to current value of VOUT_MAX, at the slew rate defined by VOUT_TRANSITION_RATE.
- Set the NONE OF THE ABOVE bit in the STATUS_BYTE.
- Set the VOUT bit in the STATUS_WORD.
- Set the VOUT_MIN_MAX warning bit in STATUS_VOUT.
- Notify the host per PMBus 1.3.1 Part II specification, section 10.2.

Although the scenario is uncommon, note that the same response results if the user attempted to program VOUT_MAX less than the current output voltage target.

Copyright © 2024 Texas Instruments Incorporated

7.22 (25h) VOUT_MARGIN_HIGH

CMD Address	25h
Write Transaction:	Write Word
Read Transaction:	Read Word
Format:	ULINEAR16, per VOUT_MODE
Phased:	No
NVM Back-up:	EEPROM
Updates:	On-the-fly

The VOUT_MARGIN_HIGH command loads the unit with the voltage to which the output is to be changed when the OPERATION command is set to “Margin High”. Output voltage transitions during margin operation occur at the slew rate defined by VOUT_TRANSITION_RATE.

When the MARGIN bits in the OPERATION command indicate “Margin High,” the output voltage is updated to the value of VOUT_MARGIN_HIGH + VOUT_TRIM.

Figure 7-21. (25h) VOUT_MARGIN_HIGH Register Map

15	14	13	12	11	10	9	8
RW	RW	RW	RW	RW	RW	RW	RW
VOUT_MARGH (High Byte)							
7	6	5	4	3	2	1	0
RW	RW	RW	RW	RW	RW	RW	RW
VOUT_MARGH (Low Byte)							

LEGEND: R/W = Read/Write; R = Read only

Table 7-18. Register Field Descriptions

Bit	Field	Access	Reset	Description
15:0	VOUT_ MARGH	RW	NVM	Margin High output voltage. ULINEAR16 relative or absolute per the setting of VOUT_ MODE

The minimum and maximum valid data values for VOUT_MARGIN_HIGH follow the description in VOUT_COMMAND. That is, the total combined output voltage, including VOUT_MARGIN_HIGH and VOUT_TRIM, follow the values allowed by the current VOUT_MAX setting.

Attempts to write (25h) VOUT_MARGIN_HIGH to any value outside those specified as valid will be considered invalid/unsupported data and cause the TPSM8S6B24S to respond by flagging the appropriate status bits and notifying the host according to the PMBus 1.3.1 Part II specification section 10.9.3.

Copyright © 2024 Texas Instruments Incorporated

7.23 (26h) VOUT_MARGIN_LOW

CMD Address	26h
Write Transaction:	Write Word
Read Transaction:	Read Word
Format:	ULINEAR16, per VOUT_MODE
Phased:	No
NVM Back-up:	EEPROM

The VOUT_MARGIN_LOW command loads the unit with the voltage to which the output is to be changed when the OPERATION command is set to “Margin Low”. Output voltage transitions during margin operation occur at the slew rate defined by VOUT_TRANSITION_RATE.

When the MARGIN bits in the OPERATION command indicate “Margin Low,” the output voltage is updated to the value of VOUT_MARGIN_LOW + VOUT_TRIM.

Figure 7-22. (26h) VOUT_MARGIN_LOW Register Map

15	14	13	12	11	10	9	8
RW	RW	RW	RW	RW	RW	RW	RW
VOUT_MARGIN_LOW (High Byte)							
7	6	5	4	3	2	1	0
RW	RW	RW	RW	RW	RW	RW	RW
VOUT_MARGIN_LOW (Low Byte)							

LEGEND: R/W = Read/Write; R = Read only

Table 7-19. Register Field Descriptions

Bit	Field	Access	Reset	Description
15:0	VOUT_ MARGL	RW	NVM	Margin Low output voltage. ULINEAR16 relative or absolute per the setting of VOUT_ MODE

The minimum and maximum valid data values for VOUT_MARGIN_LOW follow the description in VOUT_COMMAND. Attempts to write (26h) VOUT_MARGIN_LOW to any value outside those specified as valid will be considered invalid/unsupported data and cause the TPSM8S6B24S to respond by flagging the appropriate status bits and notifying the host according to the PMBus 1.3.1 Part II specification section 10.9.3.

Copyright © 2024 Texas Instruments Incorporated

7.24 (27h) VOUT_TRANSITION_RATE

CMD Address	27h
Write Transaction:	Write Word
Read Transaction:	Read Word
Format:	SLINEAR11 per CAPABILITY
Phased:	No
NVM Back-up:	EEPROM
Updates:	On-the-fly

The VOUT_TRANSITION_RATE sets the slew rate at which any output voltage changes during normal power conversion occur. This commanded rate of change does not apply when the unit is commanded to turn on or to turn off. The units are mV/µs.

Figure 7-23. (27h) VOUT_TRANSITION_RATE Register Map

15	14	13	12	11	10	9	8
RW	RW	RW	RW	RW	RW	RW	RW
VOTR_EXP					VOTR_MAN		
7	6	5	4	3	2	1	0
RW	RW	RW	RW	RW	RW	RW	RW
VOTR_MAN							

LEGEND: R/W = Read/Write; R = Read only

Table 7-20. Register Field Descriptions

Bit	Field	Access	Reset	Description
15:11	VOTR_ EXP	RW	11100b	Linear format two's complement exponent. Exponent = -4, LSB = 0.0625 mV/µs
10:0	VOTR_ MAN	RW	NVM	Linear format two's complement mantissa

Per the TPSM8S6B24S product specification, the following slew rates are supported (see the table below). Note that every binary value between the minimum and maximum values is writeable and readable, but that the actual output voltage slew rate is set to the nearest supported value.

VOUT_TRANSITION RATE can be programmed from 0.067 mV/µs to 15.933 mV/µs.

Attempts to write (27h) VOUT_TRANSITION_RATE to any value outside those specified as valid will be considered invalid/unsupported data and cause the TPSM8S6B24S to respond by flagging the appropriate status bits and notifying the host according to the PMBus 1.3.1 Part II specification section 10.9.3.

Copyright © 2024 Texas Instruments Incorporated

7.25 (29h) VOUT_SCALE_LOOP

CMD Address	29h
Write Transaction:	Write Word
Read Transaction:	Read Word
Format:	SLINEAR11 per CAPABILITY
Phased:	No
Updates:	Conversion Disable: on-the-fly. Conversion Enable: hardware update blocked. To update hardware after write while enabled, store to NVM with STORE_USER_ALL and RESTORE_USER_ALL or cycle AVIN below UVLO.
NVM Back-up:	EEPROM or Pin Detection

VOUT_SCALE_LOOP allows PMBus devices to map between the commanded voltage and the voltage at the control circuit input. In the TPSM8S6B24S, VOUT_SCALE_LOOP also programs an internal precision resistor divider so no external divider is required.

Figure 7-24. (29h) VOUT_SCALE_LOOP Register Map

15	14	13	12	11	10	9	8
RW	RW	RW	RW	RW	RW	RW	RW
VOSL_EXP					VOSL_MAN		
7	6	5	4	3	2	1	0
RW	RW	RW	RW	RW	RW	RW	RW
VOSL_MAN							

LEGEND: R/W = Read/Write; R = Read only

Table 7-21. Register Field Descriptions

Bit	Field	Access	Reset	Description
15:11	VOSL_ EXP	RW	11001b	Linear format two's complement exponent
10:0	VOSL_ MAN	RW	NVM	Linear format two's complement mantissa

Data Validity

Every binary value between the minimum and maximum supported values is writeable and readable. However, not every combination is supported in hardware. Refer to Table 7-22:

Table 7-22. Accepted Values

VOUT_SCALE_LOOP (DECODED)	INTERNAL DIVIDER SCALING FACTOR
Less than or equal to 0.125	0.125
0.125 < VOSL ≤ 0.25	0.25
0.25 < VOSL ≤ 0.5	0.5
Greater than 0.5	1.0

Attempts to write (29h) VOUT_SCALE_LOOP to any value outside those specified as valid will be considered invalid/unsupported data and cause the TPSM8S6B24S to respond by flagging the appropriate status bits and notifying the host according to the PMBus 1.3.1 Part II specification section 10.9.3.

If a (29h) VOUT_SCALE_LOOP value other than a supported Internal Divider Scaling Factor is programmed into (29h) VOUT_SCALE_LOOP, (21h) VOUT_COMMAND to VREF scale factors are calculated based on the actual (29h) VOUT_SCALE_LOOP value. (29h) VOUT_SCALE_LOOP values other than supported Internal Divider Scaling Factors can produce a mismatch between (21h) VOUT_COMMAND and the actual commanded output voltage.

Copyright © 2024 Texas Instruments Incorporated

7.26 (2Bh) VOUT_MIN

CMD Address	2Bh
Write Transaction:	Write Word
Read Transaction:	Read Word
Format:	ULINEAR16,Absolute Only per VOUT_MODE
Phased:	No
Updates:	on-the-fly
NVM Back-up:	EEPROM or Pin Detection

The VOUT_MIN command sets a lower limit on the output voltage the unit can command regardless of any other commands or combinations. The intent of this command is to provide a safeguard against a user accidentally setting the output voltage to a level which will render the load inoperable.

Figure 7-25. (2Bh) VOUT_MIN Register Map

15	14	13	12	11	10	9	8
RW	RW	RW	RW	RW	RW	RW	RW
VOUT_MIN (High Byte)							
7	6	5	4	3	2	1	0
RW	RW	RW	RW	RW	RW	RW	RW
VOUT_MIN (Low Byte)							

LEGEND: R/W = Read/Write; R = Read only

Table 7-23. Register Field Descriptions

Bit	Field	Access	Reset	Description
15:0	VOUT_ MIN	RW	NVM	Minimum output voltage. ULINEAR16 absolute per the setting of VOUT_ MODE.

During power conversion, any output voltage change (including VOUT_COMMAND, VOUT_TRIM, margin operations) that causes the new target voltage to be less than the current value of VOUT_MIN will cause the VOUT_MAX_MIN_WARNING fault condition. These results cause the TPSM8S6B24S to:

- Set to the output voltage to current value of VOUT_MIN at the slew rate defined by VOUT_TRANSITION_RATE.
- Set the NONE OF THE ABOVE in the STATUS_BYTE.
- Set the VOUT bit in the STATUS_WORD.
- Set the VOUT_MIN_MAX warning bit in STATUS_VOUT.
- Notify the host per PMBus 1.3.1 Part II specification, section 10.2.

Although the scenario is uncommon, note that the same response results if the user attempted to program VOUT_MAX greater than the current output voltage target.

Data Validity

The minimum and maximum valid data values for VOUT_MIN follow those of VOUT_MAX. Attempts to write (2Bh) VOUT_MIN to any value outside those specified as valid will be considered invalid/unsupported data and cause the TPSM8S6B24S to respond by flagging the appropriate status bits and notifying the host according to the PMBus 1.3.1 Part II specification section 10.9.3.

Copyright © 2024 Texas Instruments Incorporated

7.27 (33h) FREQUENCY_SWITCH

CMD Address	33h
Write Transaction:	Write Word
Read Transaction:	Read Word
Format:	SLINEAR11, per CAPABILITY
Phased:	No
Updates:	Conversion Disable: on-the-fly. Conversion Enable: hardware update blocked. To update hardware after write while enabled, store to NVM with STORE_USER_ALL and RESTORE_USER_ALL or cycle AVIN below UVLO.
NVM Back-up:	EEPROM or Pin Detection

FREQUENCY_SWITCH sets the switching frequency of the active channel in kHz.

Figure 7-26. (33h) FREQUENCY_SWITCH Register Map

15	14	13	12	11	10	9	8
RW	RW	RW	RW	RW	RW	RW	RW
FSW_EXP					FSW_MAN		
7	6	5	4	3	2	1	0
RW	RW	RW	RW	RW	RW	RW	RW
FSW_MAN							

LEGEND: R/W = Read/Write; R = Read only

Table 7-24. Register Field Descriptions

Bit	Field	Access	Reset	Description
15:11	FSW_ EXP	RW	NVM	Linear format two's complement exponent On reset, FSW_EXP is auto-generated based on the switching frequency stored in NVM.
10:0	FSW_ MAN	RW	NVM	Linear format two's complement mantissa. Refer to Table 7-25.

Table 7-25. Supported Switching Frequency Settings

FREQUENCY_SWITCH (Decoded)	Effective Switching Frequency (kHz)
Less than 250 kHz	225
251 ≤ FSW < 300 kHz	275
301 ≤ FSW < 350 kHz	325
351 ≤ FSW < 410 kHz	375
411 ≤ FSW < 500 kHz	450
501 ≤ FSW < 600 kHz	550
601 ≤ FSW < 700 kHz	650
701 ≤ FSW < 820 kHz	750
821 ≤ FSW < 1000 kHz	900
1001 ≤ FSW < 1200 kHz	1100
1201 ≤ FSW < 1400 kHz	1300
1401 ≤ FSW < 1650 kHz	1500

FREQUENCY_SWITCH values greater than 1100 kHz can require higher VDD5 current than can be provided by the internal AVIN to VDD5 linear regulator. Programming FREQUENCY_SWITCH to a value greater than 1100 kHz without an external source to VDD5 can result in repeated start-up and shut-down attempt. FRQUENCY_SWITCH values greater than 1100 kHz are not recommended for Stacked Multi-phase operation.

Copyright © 2024 Texas Instruments Incorporated

7.28 (35h) VIN_ON

CMD Address	35h
Write Transaction:	Write Word
Read Transaction:	Read Word
Format:	SLINEAR11, per CAPABILITY
Phased:	No
NVM Back-up:	EEPROM
Updates:	On-the-fly

VIN_ON command sets the value of the input voltage, in Volts, at which the unit must start power conversion.

Figure 7-27. (35h) VIN_ON Register Map

15	14	13	12	11	10	9	8
RW	RW	RW	RW	RW	RW	RW	RW
VON_EXP					VON_MAN		
7	6	5	4	3	2	1	0
RW	RW	RW	RW	RW	RW	RW	RW
VON_MAN							

LEGEND: R/W = Read/Write; R = Read only

Table 7-26. Register Field Descriptions

Bit	Field	Access	Reset	Description
15:11	VON_ EXP	RW	11110b	Linear format two's complement exponent, -2
10:0	VON_ MAN	RW	NVM	Linear format two's complement mantissa. Refer to the following text for more information.

Attempts to write (35h) VIN_ON to any value outside those specified as valid will be considered invalid/ unsupported data and cause the TPSM8S6B24S to respond by flagging the appropriate status bits and notifying the host according to the PMBus 1.3.1 Part II specification section 10.9.3.

Command Resolution and NVM Store/Restore Behavior

(35h) VIN_ON and (36h) VIN_OFF have limited hardware range and resolution as well as limited NVM allocation. While the command will accept any binary value within the valid range, values not exactly represented by the hardware resolution will be rounded down to the next lower supported threshold for implementation or upon restore from NVM during Power-On Reset or (16h) RESTORE_USER_ALL. (35h) VIN_ON hardware supports all values from 2.50 V to 18.25 in 0.25-V steps.

Note that the LOW_VIN fault condition is masked until the sensed input voltage exceeds the VIN_ON threshold for the first time following a power-on reset. Control/Enable pin toggles and EEPROM store/restore operations do not reset this masking.

Copyright © 2024 Texas Instruments Incorporated

7.29 (36h) VIN_OFF

CMD Address	36h
Write Transaction:	Write Word
Read Transaction:	Read Word
Format:	SLINEAR11, per CAPABILITY
Phased:	No
NVM Back-up:	EEPROM
Updates:	On-the-fly

(36h) VIN_OFF command sets the value of the PVIN input voltage, in Volts, at which the unit must stop power conversion. If the Power Conversion Enable conditions as defined by (02h) ON_OFF_CONFIG are met and PVIN is less than (36h) VIN_OFF, the output off due to low VIN bit in (7Ch) STATUS_INPUT is set.

Figure 7-28. (36h) VIN_OFF Register Map

15	14	13	12	11	10	9	8
RW	RW	RW	RW	R	RW	RW	RW
VOFF_EXP					VOFF_MAN		
7	6	5	4	3	2	1	0
RW	RW	RW	RW	RW	RW	RW	RW
VOFF_MAN							

LEGEND: R/W = Read/Write; R = Read only

Table 7-27. Register Field Descriptions

Bit	Field	Access	Reset	Description
15:11	VOFF_ EXP	RW	11110b	Linear format two's complement exponent
10:0	VOFF_ MAN	RW	NVM	Linear format two's complement mantissa. Refer to the following text.

Attempts to write (36h) VIN_OFF to any value outside those specified as valid will be considered invalid/ unsupported data and cause the TPSM8S6B24S to respond by flagging the appropriate status bits and notifying the host according to the PMBus 1.3.1 Part II specification section 10.9.3.

Command Resolution and NVM Store/Restore Behavior

(35h) VIN_ON and (36h) VIN_OFF have limited hardware range and resolution as well as limited NVM allocation. While the command will accept any binary value within the valid range, values not exactly represented by the hardware resolution will be rounded down to the next lower supported threshold for implementation or upon restoration from NVM during Power-On Reset or (16h) RESTORE_USER_ALL. (36h) VIN_OFF hardware supports all values from 2.25 V to 18.25 in 0.25-V steps.

While it is possible to set (36h) VIN_OFF equal to or greater than (35h) VIN_ON, it is not advisable and can produce rapid enabling and disabling of conversion and undesirable operation.

Copyright © 2024 Texas Instruments Incorporated

7.30 (37h) INTERLEAVE

CMD Address	37h
Write Transaction:	Write Word (Single Phase Only)
Read Transaction:	Read Word
Format:	Four Hexadecimal values
Phased:	No, Read only in Multi-phase stack
Updates:	On-th-fly
NVM Back-up:	EEPROM or Pin Detection

INTERLEAVE sets the phase delay between the external SYNC (IN or OUT) and the internal PMW oscillator.

Figure 7-29. (37h) INTERLEAVE Register Map

15	14	13	12	11	10	9	8
R	R	R	R	RW	RW	RW	RW
Not Used				GROUPID			
7	6	5	4	3	2	1	0
RW	RW	RW	RW	RW	RW	RW	RW
NUM_GROUP				ORDER			

LEGEND: R/W = Read/Write; R = Read only

Table 7-28. Register Field Descriptions

Bit	Field	Access	Reset	Description
15:12	Not Used	R	0h	Not used, set to b'0000.
11:8	GROUPID	RW	NVM	Group ID Number. Set to 0h to Fh.
7:4	NUM_GROUP	RW	NVM	Number in Group, sets the number of phases positions and the phase shift for each value of ORDER. Set to value 1h to 4h.
3:0	ORDER	RW	NVM	Order within the group. Each value of ORDER adds a phase shift equal to 360° / NUM_GROUP. Set to value 0h to NUM_GROUP - 1.

Table 7-29. Supported INTERLEAVE Settings

Number in Group	Order	Phase Position (°)
1	0	0
2	0	0
2	1	180
3	0	0
3	1	120
3	2	240
4	0	0
4	1	90
4	2	180
4	3	270

The (37h) INTERLEAVE command is used to arrange multiple devices sharing a common SYNC signal in time. The phase delay added to each device is equal to 360° / Number in Group × Order. To prevent misaligning the phases of a multi-phase stack, (37h) INTERLEAVE is read only when the TPSM8S6B24S is configured as part of a multi-phase stack. The Read/Write status of the (37h) INTERLEAVE command is set based on the state of the (ECh) MFR_SPECIFIC_28 (STACK_CONFIG) command at power-on and is not updated if (ECh) MFR_SPECIFIC_28 (STACK_CONFIG) is later changed. If (37h) INTERLEAVE will be used to program the

Copyright © 2024 Texas Instruments Incorporated

phase position of a stand-alone device, the TPSM8S6B24S must be configured as a stand-alone device at power-on to ensure write capability of the (37h) INTERLEAVE command.

Copyright © 2024 Texas Instruments Incorporated

7.31 (38h) IOUT_CAL_GAIN

CMD Address	38h
Write Transaction:	Write Word
Read Transaction:	Read Word
Format:	SLINEAR11, per CAPABILITY
Phased:	No
NVM Back-up:	EEPROM
Updates:	On-the-fly

(38h) IOUT_CAL_GAIN is used to trim the gain of the output current reported by the READ_IOUT command. The value is a unitless gain factor applied to the internally sensed current measurement. It defaults to a value of 1.

Figure 7-30. (38h) IOUT_CAL_GAIN Register Map

15	14	13	12	11	10	9	8
RW	RW	RW	RW	RW	RW	RW	RW
IOCG_EXP					IOCG_MAN		
7	6	5	4	3	2	1	0
RW	RW	RW	RW	RW	RW	RW	RW
IOCG_MAN							

LEGEND: R/W = Read/Write; R = Read only

Table 7-30. Register Field Descriptions

Bit	Field	Access	Reset	Description
15:11	IOCG_ EXP	RW	11001b	Linear format, two's complement exponent
10:0	IOCG_ MAN	RW	NVM	Linear format, two's complement mantissa

Attempts to write (38h) IOUT_CAL_GAIN to any value outside those specified as valid will be considered invalid/unsupported data and cause the TPSM8S6B24S to respond by flagging the appropriate status bits and notifying the host according to the PMBus 1.3.1 Part II specification section 10.9.3.

Command Resolution and NVM Store/Restore Behavior

The (38h) IOUT_CAL_GAIN command is implemented using the TPSM8S6B24S internal telemetry system. As a result, the value of this command can be programmed with very high resolution using the linear format. However, the TPSM8S6B24S provides only limited NVM-backed options for this command. Following a power-cycle or NVM Store/Restore operation, the value will be rounded to the nearest 1/64 with a maximum supported value of 1.984 (1 63/64).

Copyright © 2024 Texas Instruments Incorporated

7.32 (39h) IOUT_CAL_OFFSET

CMD Address	39h
Write Transaction:	Write Word
Read Transaction:	Read Word
Format:	SLINEAR11, per CAPABILITY
Phased:	Yes
NVM Back-up:	EEPROM
Updates:	On-the-fly

IOUT_CAL_OFFSET is used to compensate for offset errors in the READ_IOUT command. Each PHASE in a stack can apply an independent IOUT_CAL_OFFSET value. The effective IOUT_CAL_OFFSET value for a stack is equal to the sum of the IOUT_CAL_OFFSET values from all devices in the stack.

Figure 7-31. (39h) IOUT_CAL_OFFSET Register Map

15	14	13	12	11	10	9	8
RW	RW	RW	RW	RW	RW	RW	RW
IOCOS_EXP					IOCOS_MAN		
7	6	5	4	3	2	1	0
RW	RW	RW	RW	RW	RW	RW	RW
IOCOS_MAN							

LEGEND: R/W = Read/Write; R = Read only

Table 7-31. Register Field Descriptions

Bit	Field	Access	Reset	Description
15:11	IOCOS_EXP	RW	11100b	Linear format, two's complement exponent
10:0	IOCOS_MAN	RW	NVM	Linear format, two's complement mantissa

Attempts to write (39h) IOUT_CAL_OFFSET to any value outside those specified as valid will be considered invalid/unsupported data and cause the TPSM8S6B24S to respond by flagging the appropriate status bits and notifying the host according to the PMBus 1.3.1 Part II specification section 10.9.3.

Command Resolution and NVM Store/Restore Behavior

The (39h) IOUT_CAL_OFFSET command is implemented using the TPSM8S6B24S internal telemetry system. As a result, the value of this command can be programmed with very high resolution using the linear format. However, the only provides limited NVM-backed options for this command. Following a power-cycle or NVM Store/Restore operation, the value will be restored to one of the supported values, according to the value present during the last NVM store operation. During operation, updates to this command with higher resolution, will be supported, and accepted as long as they fall between the minimum and maximum supported values given.

Phased Command Behavior

PHASE = 00h to 03h: Writes to (39h) IOUT_CAL_OFFSET modify the current sense offset for individual phases. Reads to (39h) IOUT_CAL_OFFSET return the configured current sense offset for individual phases.

PHASE = FFh: Writes to (39h) IOUT_CAL_OFFSET modify the total current sense offset for all individual phases. Individual phases will be assigned an IOUT_CAL_OFFSET value equal to the written value divided by the number of phases. Reads to (39h) IOUT_CAL_OFFSET return the configured current sense offset for PHASE = 00h times the number of phases.

Copyright © 2024 Texas Instruments Incorporated

7.33 (40h) VOUT_OV_FAULT_LIMIT

CMD Address	40h
Write Transaction:	Write Word
Read Transaction:	Read Word
Format:	ULINEAR16 Relative or Absolute per VOUT_MODE
Phased:	No
NVM Back-up:	EEPROM
Updates:	On-the-fly

The VOUT_OV_FAULT_LIMIT command sets the value of the output voltage measured at the sense or output pins that causes an output overvoltage fault. VOUT_OV_FAULT_LIMIT sets an overvoltage threshold relative to the current VOUT_COMMAND. Updates to VOUT_COMMAND do not update the value of VOUT_OV_FAULT_LIMIT when the absolute format is used. Note that even with VOUT_MODE configured in absolute format, the true overvoltage fault limit remains relative to the current VOUT_COMMAND. VOUT_OV_FAULT_LIMIT is active as soon as the TPSM8S6B24S completes its Power-On Reset, even if output conversion is disabled.

Following an overvoltage fault condition, the TPSM8S6B24S responds according to VOUT_OV_FAULT_RESPONSE.

Figure 7-32. (40h) VOUT_OV_FAULT_LIMIT Register Map

15	14	13	12	11	10	9	8
RW	RW	RW	RW	RW	RW	RW	RW
VOUT_OVF (High Byte)							
7	6	5	4	3	2	1	0
RW	RW	RW	RW	RW	RW	RW	RW
VOUT_OVF (Low Byte)							

LEGEND: R/W = Read/Write; R = Read only

Table 7-32. Register Field Descriptions

Bit	Field	Access	Reset	Description
15:0	VOUT_ OVF	RW	See Below	Sets the overvoltage fault limit. Format is per VOUT_ MODE.

Hardware Support and Value Mapping

The Hardware for VOUT_OV_FAULT_LIMIT is implemented as a fixed percentage of the current output voltage target. Depending on the VOUT_MODE setting, the value written to VOUT_OV_FAULT_LIMIT must be mapped to the hardware percentage.

Programmed values not exactly equal to one of the hardware relative values shall be rounded up to the next available relative value supported by hardware. The hardware supports values from 105% to 140% of VOUT_COMMAND in 2.5% steps. When output conversion is disabled, the hardware supports values from 110% to 140% of VOUT_COMMAND in 10% steps.

Attempts to write VOUT_OV_FAULT_LIMIT to any value outside those specified as valid will be considered invalid/unsupported data and cause the TPSM8S6B24S to respond by flagging the appropriate status bits and notifying the host according to the PMBus 1.3.1 Part II specification section 10.9.3.

Copyright © 2024 Texas Instruments Incorporated

7.34 (41h) VOUT_OV_FAULT_RESPONSE

CMD Address	41h
Write Transaction:	Write Byte
Read Transaction:	Read Byte
Format:	Unsigned Binary (1 byte)
Phased:	No
NVM Back-up:	EEPROM
Updates:	On-the-fly

The VOUT_OV_FAULT_RESPONSE instructs the device on what action to take in response to an output overvoltage fault. Upon triggering the overvoltage fault, the controller TPSM8S6B24S responds according to the data byte below, and the following actions are taken:

- Set the VOUT_OV_FAULT bit in the STATUS_BYTE.
- Set the VOUT bit in the STATUS_WORD.
- Set the VOUT_OVF bit in the STATUS_VOUT register.
- Notify the host per PMBus 1.3.1 Part II specification, section 10.2.

Figure 7-33. (41h) VOUT_OV_FAULT_RESPONSE Register Map

7	6	5	4	3	2	1	0
RW	RW	RW	RW	RW	RW	RW	RW
VO_OV_RESP		VO_OV_RETRY			VO_ OV_ DELAY		

LEGEND: R/W = Read/Write; R = Read only

Table 7-33. Register Field Descriptions

Bit	Field	Access	Reset	Description
7:6	VO_OV_RESP	RW	NVM	Output overvoltage response 00b: Ignore. Continue operating without interruption. 01b: Shutdown. Shutdown and retry according to VO_OV_RETRY. 10b: Shutdown. Shutdown and retry according to VO_ OV_ RETRY. 11b: Invalid/Unsupported
5:3	VO_OV_RETRY	RW	NVM	0d: Do not attempt to restart (latch off). 1d-6d: After shutting down, wait one HICCUP period, and attempt to restart up to 1 - 6 times. After 1 - 6 failed restart attempts, do not attempt to restart (latch off). 7d: After shutting down, wait one HICCUP period, and attempt to restart indefinitely, until commanded OFF, or a successful start-up occurs.
2:0	VO_OV_DELAY	RW	NVM	0d: VO_OV HICCUP period is equal to TON_RISE. 1d - 7d: VO_OV HICCUP period is equal to 1 - 7 times TON_RISE.

Attempts to write VOUT_OV_FAULT_RESPONSE to any value outside those specified as valid, will be considered invalid/unsupported data and cause the TPSM8S6B24S to respond by flagging the appropriate status bits and notifying the host according to the PMBus 1.3.1 Part II specification section 10.9.3.

A Restart Attempt is successful and the restart limit counter is reset to 0 when no fault with a shut-down response is observed after one (61h) TON_RISE time after completing (61h) TON_RISE or after (62h) TON_MAX_FAULT_LIMIT if (62h) TON_MAX_FAULT_LIMIT is not set to 0 ms (Disabled).

If (41h) VOUT_OV_FAULT_RESPONSE is configured to ignore a VOUT_OV_FAULT, and a VOUT_OV_FAULT is present at the time of enabling the device, the device will not start up. To ensure the part will ignore any potential VOUT_OV_FAULT at start-up, TI recommends to set the (40h) VOUT_OV_FAULT_LIMIT greater than the maximum possible input voltage applied during start-up.

Copyright © 2024 Texas Instruments Incorporated

7.35 (42h) VOUT_OV_WARN_LIMIT

CMD Address	42h
Write Transaction:	Write Word
Read Transaction:	Read Word
Format:	ULINEAR16 Relative or Absolute per VOUT_MODE
Phased:	No
NVM Back-up:	EEPROM
Updates:	On-the-fly

The VOUT_OV_WARN_LIMIT command sets the value of the output voltage at the sense or output pins that causes an output voltage high warning. This value is typically less than the output overvoltage threshold. The OV_WARN_LIMIT sets an overvoltage threshold relative to the current VOUT_COMMAND. Updates to VOUT_COMMAND do not update the value of VOUT_OV_FAULT_LIMIT when the absolute format is used.

When the sensed output voltage exceeds the VOUT_OV_WARN_LIMIT threshold, the following actions are taken:

- Set the VOUT bit in the STATUS_WORD.
- Set the VOUT_OVW bit in the STATUS_VOUT register.
- Notify the host per PMBus 1.3.1 Part II specification, section 10.2.

Figure 7-34. (42h) VOUT_OV_WARN_LIMIT Register Map

15	14	13	12	11	10	9	8
RW	RW	RW	RW	RW	RW	RW	RW
VOUT_OVW (High Byte)							
7	6	5	4	3	2	1	0
RW	RW	RW	RW	RW	RW	RW	RW
VOUT_OVW (Low Byte)							

LEGEND: R/W = Read/Write; R = Read only

Table 7-34. Register Field Descriptions

Bit	Field	Access	Reset	Description
15:0	VOUT_ OVW	RW	NVM	Sets the overvoltage warning limit. Format is per VOUT_ MODE.

Hardware Support and Value Mapping

The Hardware for VOUT_OV_WARN_LIMIT is implemented as a fixed percentage of the current output voltage target. Depending on the VOUT_MODE setting, the value written to VOUT_OV_WARN_LIMIT must be mapped to a hardware percentage.

Programmed values not exactly equal to one of the hardware relative values shall be rounded up to the next available relative value supported by hardware. The hardware supports values from 103% to 116% VOUT_COMMAND in 1% steps.

Attempts to write (42h) VOUT_OV_WARN_LIMIT to any value outside those specified as valid, will be considered invalid/unsupported data and cause the TPSM8S6B24S to respond by flagging the appropriate status bits and notifying the host according to the PMBus 1.3.1 Part II specification section 10.9.3.

Copyright © 2024 Texas Instruments Incorporated

7.36 (43h) VOUT_UV_WARN_LIMIT

CMD Address	43h
Write Transaction:	Write Word
Read Transaction:	Read Word
Format:	ULINEAR16 Relative or Absolute per VOUT_MODE
Phased:	No
NVM Back-up:	EEPROM
Updates:	On-the-fly

The VOUT_UV_WARN_LIMIT command sets the value of the output voltage at the sense or output pins that causes an output voltage low warning. The VOUT_UV_WARN_LIMIT sets an undervoltage threshold relative to the current VOUT_COMMAND. Updates to VOUT_COMMAND do not update VOUT_UV_WARN_LIMIT when the absolute format is used.

When the sensed output voltage exceeds the VOUT_UV_WARN_LIMIT threshold, the following actions are taken:

- Set the VOUT bit in the STATUS_WORD.
- Set the VOUT_UVW bit in the STATUS_VOUT register.
- Notify the host per PMBus 1.3.1 Part II specification, section 10.2.

Figure 7-35. (43h) VOUT_UV_WARN_LIMIT Register Map

15	14	13	12	11	10	9	8
RW	RW	RW	RW	RW	RW	RW	RW
VOUT_UVW (High Byte)							
7	6	5	4	3	2	1	0
RW	RW	RW	RW	RW	RW	RW	RW
VOUT_UVW (Low Byte)							

LEGEND: R/W = Read/Write; R = Read only

Table 7-35. Register Field Descriptions

Bit	Field	Access	Reset	Description
15:0	VOUT_ UVW	RW	NVM	Sets the undervoltage warning limit. Format is per VOUT_ MODE.

Hardware Mapping and Supported Values

The Hardware for VOUT_UV_WARN_LIMIT is implemented as a fixed percentage relative to the current output voltage target. Depending on the VOUT_MODE setting, the value written to VOUT_UV_WARN_LIMIT must be mapped to the hardware percentage.

Programmed values not exactly equal to one of the hardware relative values is rounded down to the next available relative value supported by hardware. The hardware supports values from 84% to 97% VOUT_COMMAND in 1% steps.

Attempts to write (43h) VOUT_UV_WARN_LIMIT to any value outside those specified as valid, will be considered invalid/unsupported data and cause the TPSM8S6B24S to respond by flagging the appropriate status bits and notifying the host according to the PMBus 1.3.1 Part II specification section 10.9.3.

Copyright © 2024 Texas Instruments Incorporated

7.37 (44h) VOUT_UV_FAULT_LIMIT

CMD Address	44h
Write Transaction:	Write Word
Read Transaction:	Read Word
Format:	ULINEAR16 Absolute per VOUT_MODE
Phased:	No
NVM Back-up:	EEPROM
Updates:	On-the-fly

The VOUT_UV_FAULT_LIMIT command sets the value of the output voltage at the sense or output pins that causes an output voltage fault. The VOUT_UV_FAULT_LIMIT sets an undervoltage threshold relative to the current VOUT_COMMAND. Updates to VOUT_COMMAND do not update VOUT_UV_FAULT_LIMIT when the absolute format is used.

When the undervoltage fault condition is triggered, the TPSM8S6B24S responds according to VOUT_UV_FAULT_RESPONSE.

Figure 7-36. (44h) VOUT_UV_FAULT_LIMIT Register Map

15	14	13	12	11	10	9	8
RW	RW	RW	RW	RW	RW	RW	RW
VOUT_UVF (High Byte)							
7	6	5	4	3	2	1	0
RW	RW	RW	RW	RW	RW	RW	RW
VOUT_UVF (Low Byte)							

LEGEND: R/W = Read/Write; R = Read only

Table 7-36. Register Field Descriptions

Bit	Field	Access	Reset	Description
15:0	VOUT_UVW	RW	NVM	Sets the undervoltage fault limit. Format is per VOUT_ MODE

Hardware Mapping and Supported Values

The Hardware for VOUT_UV_FAULT_LIMIT is implemented as a fixed percentage relative to the current output voltage target. Depending on the VOUT_MODE setting, the value written to VOUT_UV_FAULT_LIMIT must be mapped to the hardware percentage.

Programmed values not exactly equal to one of the hardware relative values are rounded down to the next available relative value supported by hardware. The hardware supports values from 60% to 95% of VOUT_COMMAND in 2.5% steps.

Attempts to write (44h) VOUT_UV_FAULT_LIMIT to any value outside those specified as valid will be considered invalid/unsupported data and cause the TPSM8S6B24S to respond by flagging the appropriate status bits and notifying the host according to the PMBus 1.3.1 Part II specification section 10.9.3.

Copyright © 2024 Texas Instruments Incorporated

7.38 (45h) VOUT_UV_FAULT_RESPONSE

CMD Address	45h
Write Transaction:	Write Byte
Read Transaction:	Read Byte
Format:	Unsigned Binary (1 byte)
Phased:	No
NVM Back-up:	EEPROM
Updates:	On-the-fly

- The VOUT_UV_FAULT_RESPONSE instructs the device on what action to take in response to an output undervoltage fault.

The VOUT_UV_FAULT_RESPONSE instructs the device on what action to take in response to an output undervoltage fault. Upon triggering the overvoltage fault, the TPSM8S6B24S responds according to the data byte below, and the following actions are taken:

- Set the NONE OF THE ABOVE bit in the STATUS_BYTE.
- Set the VOUT bit in the STATUS_WORD.
- Set the VOUT_UVF bit in the STATUS_VOUT register.
- Notify the host per PMBus 1.3.1 Part II specification, section 10.2.

Figure 7-37. (45h) VOUT_UV_FAULT_RESPONSE Register Map

7	6	5	4	3	2	1	0
RW	RW	RW	RW	RW	RW	RW	RW
VO_UV_RESP		VO_UV_RETRY			VO_UV_DLY		

LEGEND: R/W = Read/Write; R = Read only

Table 7-37. Register Field Descriptions

Bit	Field	Access	Reset	Description
7:6	VO_ UV_ RESP	RW	NVM	Output undervoltage response 00b: Ignore. Continue operating without interruption. 01b: Shutdown after Delay, as set by VO_UV_DELY 10b: Shutdown Immediately Other: Invalid/Unsupported
5:3	VO_ UV_ RETRY	RW	NVM	Output undervoltage retry 0d: Do not attempt to restart (latch off). 1d-6d: After shutting down, wait one HICCUP period, and attempt to restart upto 1 - 6 times. After 1 - 6 failed restart attempts, do not attempt to restart (latch off). 7d: After shutting down, wait one HICCUP period, and attempt to restart indefinitely, until commanded OFF, or a successful start-up occurs.
2:0	VO_ UV_ DLY	RW	NVM	Output undervoltage delay time for respond after delay and HICCUP 0d: Shutdown delay of one PWM_CLK, HICCUP equal to TON_RISE 1d: Shutdown delay of one PWM_CLK, HICCUP equal to TON_RISE 2d - 4d: Shutdown delay of three PWM_CLK, HICCUP equal to 2 - 4 times TON_RISE 5d - 7d: Shutdown delay of seven PWM_CLK, HICCUP equal to 5 - 7 times TON_RISE

Attempts to write (45h) VOUT_UV_FAULT_RESPONSE to any value outside those specified as valid will be considered invalid/unsupported data and cause the TPSM8S6B24S to respond by flagging the appropriate status bits and notifying the host according to the PMBus 1.3.1 Part II specification section 10.9.3.

Copyright © 2024 Texas Instruments Incorporated

7.39 (46h) IOUT_OC_FAULT_LIMIT

CMD Address	46h
Write Transaction:	Write Word
Read Transaction:	Read Word
Format:	SLINEAR11 per CAPABILITY
Phased:	Yes
NVM Back-up:	EEPROM or Pin Detection
Updates:	On-the-fly

The IOUT_OC_FAULT_LIMIT command sets the value of the output current that causes the overcurrent detector to indicate an overcurrent fault condition. While each TPSM8S6B24S device in a multi-phase stack has its own IOUT_OC_FAULT_LIMIT and comparator, the effective current limit of the multi-phase stack is equal to the lowest IOUT_OC_FAULT_LIMIT setting times the number of phases in the stack.

When the overcurrent fault is triggered, the TPSM8S6B24S responds according to IOUT_OC_FAULT_RESPONSE.

Figure 7-38. (46h) IOUT_OC_FAULT_LIMIT Register Map

15	14	13	12	11	10	9	8
RW	RW	RW	RW	RW	RW	RW	RW
IO_OCF_EXP					IO_OCF_MAN		
7	6	5	4	3	2	1	0
RW	RW	RW	RW	RW	RW	RW	RW
IO_OCF_MAN							

LEGEND: R/W = Read/Write; R = Read only

Table 7-38. Register Field Descriptions

Bit	Field	Access	Reset	Description
15:11	IO_OCF_EXP	RW	11110b	Linear format two's complement exponent
10:0	IO_OCF_MAN	RW	NVM	Linear format two's complement mantissa. Refer to the table below. Multi-phase Stack Current Limit up to 62 A x Number of Phases (PHASE = FFh) Per Phase OCL: up to 62 A (PHASE ! = FFh)

Attempts to write (46h) IOUT_OC_FAULT_LIMIT to any value outside those specified as valid, will be considered invalid/unsupported data and cause the TPSM8S6B24S to respond by flagging the appropriate status bits and notifying the host according to the PMBus 1.3.1 Part II specification section 10.9.3.

Command Resolution and NVM Store/Restore Behavior

The Per-PHASE (PHASE != FFh) IOUT_OC_FAULT_LIMIT is implemented in analog hardware. The analog hardware supports current limits from 8 A to 62 A in 2-A steps. Programmed values not exactly equal to hardware supported values will be rounded up to the next available supported value. Values less than 8 A per device can be written to IOUT_OC_FAULT_LIMIT, but values less than 8 A per device will be implemented as 8 A in hardware. The TPSM8S6B24S provides only limited NVM-backed options for this command. Following a power-cycle or NVM Store/Restore operation, the value will be rounded to the nearest NVM supported value. The NVM supports values up to 62 A in 0.25-A steps.

Phased Command Behavior

Write when PHASE = FFh: Set IOUT_OC_FAULT_LIMIT for each phase to the written value divided by the number of phases.

Copyright © 2024 Texas Instruments Incorporated

Read when PHASE = FFh: Report the IOUT_OC_FAULT_LIMIT value of PHASE = 00h (Loop Controller) times the number of phases.

Write when PHASE != FFh: Set IOUT_OC_FAUL_LIMIT for the current phase to the written value.

Read when PHASE != FFh: Report the IOUT_OC_FAULT_LIMIT value of the current phase.

Copyright © 2024 Texas Instruments Incorporated

7.40 (47h) IOUT_OC_FAULT_RESPONSE

CMD Address	47h
Write Transaction:	Write Byte
Read Transaction:	Read Byte
Format:	Unsigned Binary (1 byte)
Phased:	No
NVM Back-up:	EEPROM
Updates:	On-the-fly

The IOUT_OC_FAULT_RESPONSE instructs the device on what action to take in response to an overcurrent fault. Upon triggering the overcurrent fault, the TPSM8S6B24S responds according to the data byte below, and the following actions are taken:

- Set the IOUT_OC bit in the STATUS_BYTE.
- Set the IOUT bit in the STATUS_WORD.
- Set the IOUT_OCF bit in the STATUS_IOUT register.
- Notify the host per PMBus 1.3.1 Part II specification, section 10.2.

Figure 7-39. (47h) IOUT_OC_FAULT_RESPONSE Register Map

7	6	5	4	3	2	1	0
RW	RW	RW	RW	RW	R	R	R
IO_OC_RESP		IO_OC_RETRY			IO_OC_DELAY		

LEGEND: R/W = Read/Write; R = Read only

Table 7-39. Register Field Descriptions

Bit	Field	Access	Reset	Description
7:6	IO_OC_RESP	RW	NVM	Output ovecurrent response 00b: Ignore. Continue operating without interruption. 01b: Ignore. Continue operating without interruption. 10b: Shutdown after Delay, as set by IO_OC_DELAY 11b: Shutdown Immediately
5:3	IO_OC_RETRY	RW	NVM	Output overcurrent retry 0d: Do not attempt to restart (latch off). 1d-6d: After shutting down, wait one HICCUP period, and attempt to restart upto 1 - 6 times. After 1 - 6 failed restart attempts, do not attempt to restart (latch off). 7d: After shutting down, wait one HICCUP period, and attempt to restart indefinitely, until commanded OFF, or a successful start-up occurs.
2:0	IO_OC_DELAY	RW	NVM	Output overcurrent delay time for respond after delay and HICCUP 0d: Shutdown delay of one PWM_CLK, HICCUP equal to TON_RISE 1d: Shutdown delay of one PWM_CLK, HICCUP equal to TON_RISE 2d - 4d: Shutdown delay of three PWM_CLK, HICCUP equal to 2 - 4 times TON_RISE 5d - 7d: Shutdown delay of seven PWM_CLK, HICCUP equal to 5 - 7 times TON_RISE

Attempts to write (47h) IOUT_OC_FAULT_RESPONSE to any value outside those specified as valid will be considered invalid/unsupported data and cause the TPSM8S6B24S to respond by flagging the appropriate status bits and notifying the host according to the PMBus 1.3.1 Part II specification section 10.9.3.

Copyright © 2024 Texas Instruments Incorporated

7.41 (4Ah) IOUT_OC_WARN_LIMIT

CMD Address	4Ah
Write Transaction:	Write Word
Read Transaction:	Read Word
Format:	SLINEAR11 per CAPABILITY
Phased:	Yes
NVM Back-up:	EEPROM or Pin Detection
Updates:	On-the-fly

The IOUT_OC_WARN_LIMIT command sets the value of the output current, in amperes, that causes the overcurrent detector to indicate an overcurrent warning condition. The units are amperes.

IOUT_OC_WARN_LIMIT is a phased command. Each phase will report an output current overcurrent warning independently.

In response to an overcurrent warning condition, the TPSM8S6B24S takes the following action:

- Set the NONE OF THE ABOVE bit in the STATUS_BYTE.
- Set the IOUT bit in the STATUS_WORD.
- Set the IOUT_OCW bit in the STATUS_IOUT register.
- Notify the host per PMBus 1.3.1 Part II specification, section 10.2.

Figure 7-40. (4Ah) IOUT_OC_WARN_LIMIT Register Map

15	14	13	12	11	10	9	8
RW	RW	RW	RW	RW	RW	RW	RW
IOOCW_EXP					IOOCW_MAN		
7	6	5	4	3	2	1	0
RW	RW	RW	RW	RW	RW	RW	RW
IOOCW_MAN							

LEGEND: R/W = Read/Write; R = Read only

Table 7-40. Register Field Descriptions

Bit	Field	Access	Reset	Description
15:11	IOOCW_EXP	RW	11110b	Linear format two's complement exponent
10:0	IOOCW_MAN	RW	NVM	Linear format two's complement mantissa Supported values up to 62 A times the number of phases.

Attempts to write (4Ah) IOUT_OC_WARN_LIMIT to any value outside those specified as valid will be considered invalid/unsupported data and cause the TPSM8S6B24S to respond by flagging the appropriate status bits and notifying the host according to the PMBus 1.3.1 Part II specification section 10.9.3.

Command Resolution and NVM Store/Restore Behavior

The Per-PHASE (PHASE != FFh) IOUT_OC_WARN_LIMIT is implemented in analog hardware. The analog hardware supports current limits from 8 A to 62 A in 2-A steps. Programmed values not exactly equal to hardware supported values will be rounded up to the next available supported value. Values less than 8 A per device can be written to IOUT_OC_FAULT_LIMIT, but values less than 8 A per device will be implemented as 8 A in hardware. The TPSM8S6B24S provides only limited NVM-backed options for this command. Following a power-cycle or NVM Store/Restore operation, the value will be rounded to the nearest NVM supported value. The NVM supports values up to 62 A in 0.25-A steps.

Copyright © 2024 Texas Instruments Incorporated

7.42 (4Fh) OT_FAULT_LIMIT

CMD Address	4Fh
Write Transaction:	Write Word
Read Transaction:	Read Word
Format:	SLINEAR11 per CAPABILITY
Phased:	Yes
NVM Back-up:	EEPROM
Updates:	On-the-fly

The OT_FAULT_LIMIT command sets the value of the temperature limit, in degrees Celsius, that causes an overtemperature fault condition.

The converter response to an overtemperature event is described in OT_FAULT_RESPONSE.

Figure 7-41. (4Fh) OT_FAULT_LIMIT Register Map

15	14	13	12	11	10	9	8
RW	RW	RW	RW	RW	RW	RW	RW
OTF_EXP					OTF_MAN		
7	6	5	4	3	2	1	0
RW	RW	RW	RW	RW	RW	RW	RW
OTF_MAN							

LEGEND: R/W = Read/Write; R = Read only

Table 7-41. Register Field Descriptions

Bit	Field	Access	Reset	Description
15:11	OTF_ EXP	RW	00000b	Linear format two's complement exponent
10:0	OTF_ MAN	RW	NVM	Linear format two's complement mantissa. Refer to the following text.

Attempts to write (4Fh) OT_FAULT_LIMIT to any value outside those specified as valid will be considered invalid/unsupported data and cause the TPSM8S6B24S to respond by flagging the appropriate status bits and notifying the host according to the PMBus 1.3.1 Part II specification section 10.9.3.

Command Resolution and NVM Store/Restore Behavior

The (4Fh) OT_FAULT_LIMIT command is implemented using the TPSM8S6B24S internal telemetry system. As a result, the value of this command can be programmed with very high resolution using the linear format. However, the TPSM8S6B24S provides only limited NVM-backed options for this command. Following a power-cycle or NVM Store/Restore operation, the value will be restored to the nearest NVM supported value. The NVM supports values from 0°C to 160°C in 1°C steps. Programming a value of 255°C will disable Programmable Overtemperature Fault Limit without disabling the on-die Bandgap thermal shutdown.

Copyright © 2024 Texas Instruments Incorporated

7.43 (50h) OT_FAULT_RESPONSE

CMD Address	50h
Write Transaction:	Write Byte
Read Transaction:	Read Byte
Format:	Unsigned Binary (1 byte)
Phased:	No
NVM Back-up:	EEPROM
Updates:	On-the-fly

The OT_FAULT_RESPONSE command instructs the device on what action to take in response to an Overtemperature Fault. Upon triggering the overtemperature fault, the converter responds per the data byte below, and the following actions are taken:

- Set the TEMP bit in the STATUS_BYTE.
- Set the OTF bit in the STATUS_TEMPERATURE register.
- Notify the host per PMBus 1.3.1 Part II specification, section 10.2.

Note: the OT Fault hysteresis is set by the (51h) OT_WARN_LIMIT. When (8Dh) READ_TEMPERATURE_1 falls below (51h) OT_WARN_LIMIT, the overtemperature fault condition will be released and restart will be allowed if selected by (50h) OT_FAULT_RESPONSE. If (51h) OT_WARN_LIMIT is programmed higher than (4Fh) OT_FAULT_LIMIT, a default hysteresis of 20°C will be used instead.

Figure 7-42. (50h) OT_FAULT_RESPONSE Register Map

7	6	5	4	3	2	1	0
RW	RW	RW	RW	RW	RW	RW	RW
OTF_RESP		OT_RETRY			OT_DELAY		

LEGEND: R/W = Read/Write; R = Read only

Table 7-42. Register Field Descriptions

Bit	Field	Access	Reset	Description
7:6	OTF_RESP	RW	NVM	Overtemperature fault response 00b: Ignore. Continue operating without interruption. 01b: Delayed Shutdown Continue Operating for 10ms x OT_DELAY. If OT_FAULT is still present, shut down and restart according to OT_RETRY. 10b: Immediate Shutdown. Shut down and restart according to OT_RETRY. 11b: Shutdown until Temperature is below OT_WARN_LIMIT, then restart according to OT_RETRY*.
5:3	OT_RETRY	RW	NVM	Overtemperature retry 0d: Do not attempt to restart (latch off). 1d-6d: After shutting down, wait one HICCUP period, and attempt to restart up to 1 - 6 times. After 1 - 6 failed restart attempts, do not attempt to restart (latch off). Restart attempts that occur while temperature is above OT_WARN_LIMIT will not be observable but will be counted. 7d: After shutting down, wait one HICCUP period, and attempt to restart indefinitely, until commanded OFF or a successful start-up occurs.
2:0	OT_DELAY	RW	NVM	Overtemperature delay time for respond after delay and HICCUP 0d: Shutdown delay of 10 ms, HICCUP equal to TON_RISE, HICCUP delay equal to TON_RISE 1d - 7d: Shutdown delay of ms, HICCUP equal to 2-4 times TON_RISE

Attempts to write (50h) OT_FAULT_RESPONSE to any value outside those specified as valid will be considered invalid/unsupported data and cause the TPSM8S6B24S to respond by flagging the appropriate status bits and notifying the host according to the PMBus 1.3.1 Part II specification section 10.9.3.

Copyright © 2024 Texas Instruments Incorporated

*When (50h) OT_FAULT_RESPONSE OTF_RESP (Bits 7:6) are set to 11b - shut down until temperature is below (51h) OT_WARN_LIMIT, issuing a (03h) CLEAR_FAULTS command while the temperature is between (4Fh) OT_FAULT_LIMIT and (51h) OT_WARN_LIMIT can result in the TPSM8S6B24S remaining in the OT FAULT state until the temperature rises above (4Fh) OT_FAULT_LIMIT or disabled and enabled according to (02h) ON_OFF_CONFIG.

Copyright © 2024 Texas Instruments Incorporated

7.44 (51h) OT_WARN_LIMIT

CMD Address	51h
Write Transaction:	Write Word
Read Transaction:	Read Word
Format:	SLINEAR11 per CAPABILITY
Phased:	Yes
NVM Back-up:	EEPROM
Updates:	On-the-fly

The OT_WARN_LIMIT command sets the temperature, in degrees Celsius, of the unit at which it must indicate an Overtemperature Warning alarm. The units are degrees C.

Upon triggering the overtemperature fault, the converter responds per the data byte below, and the following actions are taken:

- Set the TEMP bit in the STATUS_BYTE.
- Set the OTW bit in the STATUS_TEMPERATURE register.
- Notify the host per PMBus 1.3.1 Part II specification, section 10.2.

Figure 7-43. (51h) OT_WARN_LIMIT Register Map

15	14	13	12	11	10	9	8
RW	RW	RW	RW	RW	RW	RW	RW
OTW_EXP					OTW_MAN		
7	6	5	4	3	2	1	0
RW	RW	RW	RW	RW	RW	RW	RW
OTW_MAN							

LEGEND: R/W = Read/Write; R = Read only

Table 7-43. Register Field Descriptions

Bit	Field	Access	Reset	Description
15:11	OTW_ EXP	RW	00000b	Linear format two's complement exponent
10:0	OTW_ MAN	RW	NVM	Linear format two's complement mantissa. Refer to the following text.

Attempts to write (51h) OT_WARN_LIMIT to any value outside those specified as valid will be considered invalid/unsupported data and cause the TPSM8S6B24S to respond by flagging the appropriate status bits and notifying the host according to the PMBus 1.3.1 Part II specification section 10.9.3.

Command Resolution and NVM Store/Restore Behavior

The (51h) OT_WARN_LIMIT command is implemented using the TPSM8S6B24S internal telemetry system. As a result the value of this command can be programmed with very high resolution using the linear format. However, the TPSM8S6B24S provides only limited NVM-backed options for this command. Following a power-cycle or NVM Store/Restore operation, the value will be restored to the nearest NVM supported value. The NVM supports values from 0°C to 160°C in 1°C steps. Programming OT_WARN_LIMIT to a value of 255°C will disable the OT_WARN_LIMIT function.

OT_WARN_LIMIT is used to provide hysteresis to OT_FAULT_LIMIT faults. If OT_WARN_LIMIT is programmed greater than OT_FAULT_LIMIT, including disabling OT_WARN_LIMIT with a value of 255°C, a default hysteresis of 20°C will be used instead.

Copyright © 2024 Texas Instruments Incorporated

7.45 (55h) VIN_OV_FAULT_LIMIT

CMD Address	55h
Write Transaction:	Write Word
Read Transaction:	Read Word
Format:	SLINEAR11 per CAPABILITY
Phased:	No
NVM Back-up:	EEPROM
Updates:	On-the-fly

The (55h) VIN_OV_FAULT_LIMIT command sets the PVIN voltage, in volts, when a VIN_OV_FAULT is declared. The response to a detected VIN_OV_FAULT is determined by the settings of (56h) VIN_OV_FAULT_RESPONSE. (55h) VIN_OV_FAULT_LIMIT is typically used to stop switching in the event of excessive input voltage, which can result in over-stress damage to the power FETs due to ringing on the SW node.

Figure 7-44. (55h) VIN_OV_FAULT_LIMIT Register Map

15	14	13	12	11	10	9	8
RW	RW	RW	RW	RW	RW	RW	RW
VINOVF_EXP					VINOVF_MAN		
7	6	5	4	3	2	1	0
RW	RW	RW	RW	RW	RW	RW	RW
VINOVF_MAN							

LEGEND: R/W = Read/Write; R = Read only

Table 7-44. Register Field Descriptions

Bit	Field	Access	Reset	Description
15:11	VINOVF_EXP	RW	11110b	Linear format two's complement exponent
10:0	VINOVF_MAN	RW	NVM	Linear format two's complement mantissa

Attempts to write (55h) VIN_OV_FAULT_LIMIT beyond the supported range will be considered invalid/unsupported data and cause the TPSM8S6B24S to respond by flagging the appropriate status bits and notifying the host according to the PMBus 1.3.1 Part II specification section 10.9.3. (55h) VIN_OV_FAULT_LIMIT supports values from 4 V to 20 V in 0.25-V steps. Following a Power Cycle or STORE/RESTORE, (55h) VIN_OV_FAULT_LIMIT will be restored to the nearest supported value.

Copyright © 2024 Texas Instruments Incorporated

7.46 (56h) VIN_OV_FAULT_RESPONSE

CMD Address	56h
Write Transaction:	Write Byte
Read Transaction:	Read Byte
Format:	Unsigned Binary (1 byte)
Phased:	No
NVM Back-up:	EEPROM
Updates:	On-the-fly

The VIN_OV_FAULT_RESPONSE command instructs the device on what action to take in response to a PVIN Overvoltage Fault. Upon triggering the PVIN overvoltage fault, the converter responds per the data byte below, and the following actions are taken:

- Set the NONE OF THE ABOVE bit in the STATUS_BYTE register.
- Set the INPUT bit in the upper byte of the STATUS_WORD register.
- Set the VIN_OV bit in the STATUS_INPUT register.
- Notify the host per PMBus 1.3.1 Part II specification, section 10.2.

Figure 7-45. (56h) VIN_OV_FAULT_RESPONSE Register Map

7	6	5	4	3	2	1	0
RW	RW	RW	RW	RW	RW	RW	RW
VINOVF_RESP		VINOVF_RETRY			VIN_OVF_DLY		

LEGEND: R/W = Read/Write; R = Read only

Table 7-45. Register Field Descriptions

Bit	Field	Access	Reset	Description
7:6	VIN_OVF_RESP	RW	NVM	PVIN Overvoltage fault response 00b: Ignore. Continue operating without interruption. 01b: Delayed Shutdown Continue Operating for a number of switching cycles defined by VIN_OVF_DLY, then if fault persists, shut down and restart according to VIN_OV_RETRY. 10b: Immediate Shutdown. Shut down and restart according to VIN_OV_RETRY. 11b: Invalid / Not Supported
5:3	VIN_OVF_RETRY	RW	NVM	PVIN Overvoltage retry 0d: Do not attempt to restart (latch off). 1d-6d: After shutting down, wait one HICCUP period, and attempt to restart up to 1 - 6 times. After 1 - 6 failed restart attempts, do not attempt to restart (latch off). Restart attempts that occur while PVIN voltage is above VIN_OV_FAULT_LIMIT will not be observable but will be counted 7d: After shutting down, wait one HICCUP period, and attempt to restart indefinitely, until commanded OFF, or a successful start-up occurs.
2:0	VIN_OVF_DLY	RW	NVM	PVIN Overvoltage delay time for respond after delay and HICCUP 0d: Shutdown delay of one PWM_CLK, HICCUP equal to TON_RISE 1d: Shutdown delay of one PWM_CLK, HICCUP equal to TON_RISE 2d - 4d: Shutdown delay of three PWM_CLK, HICCUP equal to 2 - 4 times TON_RISE 5d - 7d: Shutdown delay of seven PWM_CLK, HICCUP equal to 5 - 7 times TON_RISE

Attempts to write (56h) VIN_OV_FAULT_RESPONSE to any value outside those specified as valid will be considered invalid/unsupported data and cause the TPSM8S6B24S to respond by flagging the appropriate status bits and notifying the host according to the PMBus 1.3.1 Part II specification section 10.9.3.

Copyright © 2024 Texas Instruments Incorporated

7.47 (58h) VIN_UV_WARN_LIMIT

CMD Address	58h
Write Transaction:	Write Word
Read Transaction:	Read Word
Format:	SLINEAR11 per CAPABILITY
Phased:	Yes
NVM Back-up:	EEPROM
Updates:	On-the-fly

The (58h) VIN_UV_WARN_LIMIT command sets the value of the PVIN pin voltage, in volts, that causes the input voltage detector to indicate an input undervoltage warning.

The (58h) VIN_UV_WARN_LIMIT is a phase command, each phase within a stack will independently detect and report input undervoltage warnings.

In response to an input undervoltage warning condition, the TPSM8S6B24S takes the following action:

- Set the NONE OF THE ABOVE bit in the STATUS_BYTE.
- Set the INPUT bit in the STATUS_WORD.
- Set the VIN_UVW bit in the STATUS_INPUT register.
- Notify the host per PMBus 1.3.1 Part II specification, section 10.2.

Figure 7-46. (58h) VIN_UV_WARN_LIMIT Register Map

15	14	13	12	11	10	9	8
RW	RW	RW	RW	RW	RW	RW	RW
VINUVW_EXP					VINUVW_MAN		
7	6	5	4	3	2	1	0
RW	RW	RW	RW	RW	RW	RW	RW
VINUVW_MAN							

LEGEND: R/W = Read/Write; R = Read only

Table 7-46. Register Field Descriptions

Bit	Field	Access	Reset	Description
15:11	VINUVW_EXP	RW	11110b	Linear format two's complement exponent
10:0	VINUVW_MAN	RW	NVM	Linear format two's complement mantissa Supported values 2.5 V to 15.5 V

Attempts to write (58h) VIN_UV_WARN_LIMIT to any value outside those specified as valid will be considered invalid/unsupported data and cause the TPSM8S6B24S to respond by flagging the appropriate status bits and notifying the host according to the PMBus 1.3.1 Part II specification section 10.9.3.

Copyright © 2024 Texas Instruments Incorporated

7.48 (60h) TON_DELAY

CMD Address	60h
Write Transaction:	Write Word
Read Transaction:	Read Word
Format:	SLINEAR11 per CAPABILITY
Phased:	No
NVM Back-up:	EEPROM
Updates:	On-the-fly

The TON_DELAY command sets the time, in milliseconds, from when a start condition is received (as programmed by the ON_OFF_CONFIG command) until the output voltage starts to rise.

Figure 7-47. (60h) TON_DELAY Register Map

15	14	13	12	11	10	9	8
RW	RW	RW	RW	RW	RW	RW	RW
TONDLY_EXP					TONDLY_MAN		
7	6	5	4	3	2	1	0
RW	RW	RW	RW	RW	RW	RW	RW
TONDLY_MAN							

LEGEND: R/W = Read/Write; R = Read only

Table 7-47. Register Field Descriptions

Bit	Field	Access	Reset	Description
15:11	TONDLY_EXP	RW	11111b	Linear format two's complement exponent.
10:0	TONDLY_MAN	RW	NVM	Linear format two's complement mantissa. Note, a minimum turn-on delay of approximately 100 µs is observed even when TON_DELAY during which the device initializes itself at every power-on.

Attempts to write (60h) TON_DELAY beyond the supported range will be considered invalid/unsupported data and cause the TPSM8S6B24S to respond by flagging the appropriate status bits and notifying the host according to the PMBus 1.3.1 Part II specification section 10.9.3. TON_DELAY supports values from 0ms to 127.5 ms in 0.5-ms steps. Following a Power Cycle or STORE/RESTORE, TON_DELAY will be restored to the nearest supported value.

Refer to the Start-Up and Shutdown behavior section for handling of corner cases with respect to interrupted TON_DELAY, TON_RISE , TOFF_FALL, and TOFF_DELAY times.

Copyright © 2024 Texas Instruments Incorporated

7.49 (61h) TON_RISE

CMD Address	61h
Write Transaction:	Write Word
Read Transaction:	Read Word
Format:	SLINEAR11 per CAPABILITY
Phased:	No
NVM Back-up:	EEPROM or Pin Detection
Updates:	On-the-fly

The TON_RISE command sets the time, in milliseconds, from when the output starts to rise until the voltage has entered the regulation band. This effectively sets the slew rate of the reference DAC during the soft-start period. Note that the rise time is equal to TON_RISE regardless of the value of the target output voltage or VOUT_SCALE_LOOP.

Due to hardware limitations in the resolution of the reference DAC slew-rate control, longer TON_RISE times with higher VOUT_COMMAND voltages can result in some quantization error in the programmed TON_RISE times with several TON_RISE times producing the same VOUT slope and TON_RISE time even with different TON_RISE settings or different TON_RISE times for the same TON_RISE setting and different VOUT_COMMAND voltages.

Figure 7-48. (61h) TON_RISE Register Map

15	14	13	12	11	10	9	8
RW	RW	RW	RW	RW	RW	RW	RW
TONR_EXP					TONR_MAN		
7	6	5	4	3	2	1	0
RW	RW	RW	RW	RW	RW	RW	RW
TONR_MAN							

LEGEND: R/W = Read/Write; R = Read only

Table 7-48. Register Field Descriptions

Bit	Field	Access	Reset	Description
15:11	TONR_ EXP	RW	11110b	Linear format two's complement exponent
10:0	TONR_ MAN	RW	NVM	Linear format two's complement mantissa

Attempts to write (61h) TON_RISE beyond the supported range will be considered invalid/unsupported data and cause the TPSM8S6B24S to respond by flagging the appropriate status bits and notifying the host according to the PMBus 1.3.1 Part II specification section 10.9.3. TON_RISE will support the range from 0ms to 31.75 ms in 0.25-ms steps. Values less than 0.5 ms are supported as 0.5 ms.

Copyright © 2024 Texas Instruments Incorporated

7.50 (62h) TON_MAX_FAULT_LIMIT

CMD Address	62h
Write Transaction:	Write Word
Read Transaction:	Read Word
Format:	SLINEAR11 per CAPABILITY
Phased:	No
NVM Back-up:	EEPROM
Updates:	On-the-fly

The TON_MAX_FAULT_LIMIT command sets an upper limit, in milliseconds, on how long the unit can attempt to power up the output without reaching the target voltage.

The TON_MAX time is defined as the maximum allowable amount of time from the end of TON_DELAY, until the output voltage reaches 85% of the programmed output voltage, as sensed by the READ_VOUT telemetry at VOSNS - GOSNS.

Note that for the TPSM8S6B24S, the undervoltage fault limit is enabled at the end of TON_RISE. As a consequence, unless VOUT_UV_FAULT_RESPONSE is set to ignore, in the case of a “real” TON_MAX fault (for example, output voltage did not rise quickly enough), UV faults / associated response will always precede TON_MAX.

The converter response to a TON_MAX fault event is described in TON_MAX_FAULT_RESPONSE.

Figure 7-49. (62h) TON_MAX_FAULT_LIMIT Register Map

15	14	13	12	11	10	9	8
RW	RW	RW	RW	RW	RW	RW	RW
TONMAXF_EXP					TONMAXF_MAN		
7	6	5	4	3	2	1	0
RW	RW	RW	RW	RW	RW	RW	RW
TONMAXF_MAN							

LEGEND: R/W = Read/Write; R = Read only

Table 7-49. Register Field Descriptions

Bit	Field	Access	Reset	Description
15:11	TONMAXF_EXP	RW	11111b	Linear format two’s complement exponent
10:0	TONMAXF_MAN	RW	NVM	Linear format two’s complement mantissa

Attempts to write (62h) TON_MAX_FAULT_LIMIT will be considered an invalid/unsupported command and cause the TPSM8S6B24S to respond by flagging the appropriate status bits and notifying the host according to the PMBus 1.3.1 Part II specification section 10.9.3. TON_MAX_FAULT_LIMIT supports values from 0 ms to 127 ms in 0.5-ms steps.

*Note: programming TON_MAX_FAULT to 0 ms disables the TON_MAX functionality.

Copyright © 2024 Texas Instruments Incorporated

7.51 (63h) TON_MAX_FAULT_RESPONSE

CMD Address	63h
Write Transaction:	Write Byte
Read Transaction:	Read Byte
Format:	Unsigned Binary (1 byte)
Phased:	No
NVM Back-up:	EEPROM
Updates:	On-the-fly

The TON_MAX_FAULT_RESPONSE instructs the device on what action to take in response to TON_MAX fault. Upon triggering the input TON_MAX fault, the converter responds per the byte below and the following actions are taken:

- Set the NONE OF THE ABOVE bit in the STATUS_BYTE.
- Set the VOUT bit in the STATUS_WORD.
- Set the TON_MAX bit in STATUS_VOUT.
- Notify the host per PMBus 1.3.1 Part II specification, section 10.2.

Figure 7-50. (63h) TON_MAX_FAULT_RESPONSE Register Map

7	6	5	4	3	2	1	0
RW	RW	RW	RW	RW	RW	RW	RW
TONMAX_RESP		TONMAX_RETRY			TONMAX_DELAY		

LEGEND: R/W = Read/Write; R = Read only

Table 7-50. Register Field Descriptions

Bit	Field	Access	Reset	Description
7:6	TONMAX_RESP	RW	NVM	TON_ MAX Fault Response 00b: Ignore. Continue operating without interruption. 01b: Continue Operating for the delay time specified by TONMAX_DELAY, if the fault is still present, shutdown and restart according to TONMAX_RETRY. 10b: Shutdown Immediately and restart according to TONMAX_RETRY.Other: Invalid/Unsupported
5:3	TONMAX_RETRY	RW	NVM	TON_MAX Fault Retry 0d: Do not attempt to restart (latch off). 1d-6d: After shutting down, wait one HICCUP period, and attempt to restart up to 1 - 6 times. 7d: After shutting down, wait one HICCUP period, and attempt to restart indefinitely, until commanded OFF, or a successful start-up occurs.
2:0	TONMAX_DELAY	RW	NVM	TON_MAX delay time for respond after delay and HICCUP 0d: Shutdown delay of 1 ms, HICCUP equal to TON_RISE 1d - 7d: Shutdown delay of 1-7 ms, HICCUP equal to 2-7 times TON_RISE

Attempts to write (63h) TON_MAX_FAULT_RESPONSE to any value outside those specified as valid, will be considered invalid/unsupported data and cause the TPSM8S6B24S to respond by flagging the appropriate status bits and notifying the host according to the PMBus 1.3.1 Part II specification section 10.9.3.

Copyright © 2024 Texas Instruments Incorporated

7.52 (64h) TOFF_DELAY

CMD Address	64h
Write Transaction:	Write Word
Read Transaction:	Read Word
Format:	SLINEAR11 per CAPABILITY
Phased:	No
NVM Back-up:	EEPROM
Updates:	On-the-fly

The TOFF_DELAY command sets the time, in milliseconds, from when a stop condition is received (as programmed by the ON_OFF_CONFIG command) until the unit stops transferring energy to the output.

Figure 7-51. (64h) TOFF_DELAY Register Map

15	14	13	12	11	10	9	8
RW	RW	RW	RW	RW	RW	RW	RW
TOFFDLY_EXP					TOFFDLY_MAN		
7	6	5	4	3	2	1	0
RW	RW	RW	RW	RW	RW	RW	RW
TOFFDLY_MAN							

LEGEND: R/W = Read/Write; R = Read only

Table 7-51. Register Field Descriptions

Bit	Field	Access	Reset	Description
15:11	TOFFDLY_EXP	RW	11111b	Linear format two's complement exponent
10:0	TOFFDLY_MAN	RW	NVM	Linear format two's complement mantissa

Attempts to write (64h) TOFF_DELAY beyond the supported range will be considered invalid/unsupported data and cause the TPSM8S6B24S to respond by flagging the appropriate status bits and notifying the host according to the PMBus 1.3.1 Part II specification section 10.9.3. TOFF_DELAY supports values from 0 ms to 127.5 ms in 0.5-ms steps. An internal delay of up to 50 µs will be added to TOFF_DELAY, even if TOFF_DELAY is equal to 0 ms.

Copyright © 2024 Texas Instruments Incorporated

7.53 (65h) TOFF_FALL

CMD Address	65h
Write Transaction:	Write Word
Read Transaction:	Read Word
Format:	SLINEAR11 per CAPABILITY
Phased:	No
NVM Back-up:	EEPROM
Updates:	On-the-fly

The TOFF_FALL command sets the time, in milliseconds, from the end of the turnoff delay time until the voltage is commanded to zero. Note that this command can only be used with a device whose output can sink enough current to cause the output voltage to decrease at a controlled rate. This effectively sets the slew rate of the reference DAC during the soft-off period. Note that the fall time is equal to TOFF_FALL regardless of the value of the target output voltage or VOUT_SCALE_LOOP for the purposes of slew rate selection based on the target output voltage.

Figure 7-52. (65h) TOFF_FALL Register Map

15	14	13	12	11	10	9	8
RW	RW	RW	RW	RW	RW	RW	RW
TOFFF_EXP					TOFFF_MAN		
7	6	5	4	3	2	1	0
RW	RW	RW	RW	RW	RW	RW	RW
TOFFF_MAN							

LEGEND: R/W = Read/Write; R = Read only

Table 7-52. Register Field Descriptions

Bit	Field	Access	Reset	Description
15:11	TOFFF_EXP	RW	11110b	Linear format two's complement exponent. Exponent = -2, LSB = 0.25 ms
10:0	TOFFF_MAN	RW	NVM	Linear format two's complement mantissa

Attempts to write (65h) TOFF_FALL beyond the supported range will be considered invalid/unsupported data and cause the TPSM8S6B24S to respond by flagging the appropriate status bits and notifying the host according to the PMBus 1.3.1 Part II specification section 10.9.3. (65h) TOFF_FALL supports values from 0.5 ms to 31.75 ms in 0.25-ms steps. Values less than 0.5 ms will be implemented as 0.5 ms.

Due to hardware limitations in the resolution of the reference DAC slew-rate control, longer TOFF_FALL times with higher (21h) VOUT_COMMAND voltages can result in some quantization error in the programmed TOFF_FALL times with several TOFF_FALL times producing the same VOUT slope and TOFF_FALL time even with different TOFF_FALL settings, or different TOFF_FALL times for the same TOFF_FALL setting and different (21h) VOUT_COMMAND voltages.

Copyright © 2024 Texas Instruments Incorporated

7.54 (78h) STATUS_BYTE

CMD Address	78h
Write Transaction:	Write Byte
Read Transaction:	Read Byte
Format:	Unsigned Binary (1 byte)
Phased:	Yes
NVM Back-up:	No
Updates:	On-the-fly

The STATUS_BYTE command returns one byte of information with a summary of the most critical faults, such as overvoltage, overcurrent, overtemperature, and so forth. The supported STATUS_BYTE message content is described in the following table. The STATUS_BYTE is equal the low byte of STATUS_WORD. The conditions in the STATUS_BYTE are summary information only. They are asserted to inform the host as to which other STATUS registers must be checked in the event of a fault. Setting and clearing of these bits must be done in the individual status registers. For example, Clearing VOUT_OVF in STATUS_VOUT also clears VOUT_OV in STATUS_BYTE.

Figure 7-53. (78h) STATUS_BYTE Register Map

7	6	5	4	3	2	1	0
RW	R	R	R	R	R	R	R
BUSY	OFF	VOUT_OV	IOUT_OC	VIN_UV	TEMP	CML	NONE OF THE ABOVE

LEGEND: R/W = Read/Write; R = Read only

Table 7-53. Register Field Descriptions

Bit	Field	Access	Reset	Description
7	BUSY	RW	0b	0b: A fault was NOT declared because the device was busy and unable to respond. 1b. A fault was declared because the device was busy and unable to respond.
6	OFF	R	0b	LIVE (unlatched) status bit 0b. The unit is enabled and converting power. 1b: The unit is NOT converting power for any reason including simply not being enabled.
5	VOUT_ OV	R	0b	0b: An output overvoltage fault has NOT occurred. 1b: An output overvoltage fault has occurred.
4	IOUT_ OC	R	0b	0b: An output overcurrent fault has NOT occurred. 1b: An output overcurrent fault has occurred.
3	VIN_ UV	R	0b	0b: An input undervoltage fault has NOT occurred. 1b: An input undervoltage fault has occurred.
2	TEMP	R	0b	0b: A temperature fault/warning has NOT occurred. 1b: A temperature fault/warning has occurred, the host must check STATUS_TEMPERATURE for more information.
1	CML	R	0b	0b: A communication, memory, logic fault has NOT occurred. 1b: A communication, memory, logic fault has occurred, the host must check STATUS_ CML for more information.
0	NONE OF THE ABOVE	R	0b	0b: A fault other than those listed above has NOT occurred. 1b: A fault other than those listed above has occurred. The host must check the STATUS_ WORD for more information.

Writing 80h to STATUS_BYTE will clear the BUSY bit, if set.

Copyright © 2024 Texas Instruments Incorporated

7.55 (79h) STATUS_WORD

CMD Address	79h
Write Transaction:	Write Word
Read Transaction:	Read Word
Format:	Unsigned Binary (2 bytes)
Phased:	Yes
NVM Back-up:	No
Updates:	On-the-fly

The STATUS_WORD command returns two bytes of information with a summary of the most critical faults, such as overvoltage, overcurrent, overtemperature, and so forth. The low byte of the STATUS_WORD is the same register as the STATUS_BYTE. The supported STATUS_WORD message content is described in the following table. The conditions in the STATUS_BYTE are summary information only.

Figure 7-54. (79h) STATUS_WORD Register Map

15	14	13	12	11	10	9	8
R	R	R	R	R	R	R	R
VOUT	IOUT	INPUT	MFR	PGOOD	0	OTHER	0
7	6	5	4	3	2	1	0
RW	R	R	R	R	R	R	R
STATUS_BYTE							

LEGEND: R/W = Read/Write; R = Read only

Table 7-54. Register Field Descriptions

Bit	Field	Access	Reset	Description
15	VOUT	R	0b	0b: An output voltage related fault has NOT occurred. 1b: An output voltage fault has occurred. The host must check STATUS_ VOUT for more information
14	IOUT	R	0b	0b: An output current related fault has NOT occurred. 1b: An output current fault has occurred. The host must check STATUS_ IOUT for more information
13	INPUT	R	0b	0b: An input related fault has NOT occurred. 1b: An input fault has occurred. The host must check STATUS_ INPUT for more information
12	MFR	R	0b	0b: A Manufacturer-defined fault has NOT occurred. 1b: A Manufacturer-defined fault has occurred. The host must check STATUS_ MFR_ SPECIFIC for more information.
11	PGOOD	R	0b	LIVE (unlatched) status bit. Should follow always the value of the PGOOD/ RESET_B pin is asserted. 0b: The output voltage is within the regulation window. PGOOD pin is de-asserted. 1b: The output voltage is NOT within the regulation window. PGOOD pin is asserted.
10	Not Supported	R	0b	Not supported and always set to 0b
9	OTHER	R	0b	0b: An OTHER fault has not occurred. 1b: An OTHER fault has occurred, the host must check STATUS_ OTHER for more information.
8	Not Supported	R	0b	Not supported and always set to 0b.
7:0	STATUS_ BYTE	RW	00h	Always equal to the STATUS_ BYTE value.

Copyright © 2024 Texas Instruments Incorporated

All bits which can trigger SMBALERT have a corresponding bit in SMBALERT_MASK.

Writing 0080h to STATUS_WORD will clear the BUSY bit, if set. Writing 0180h to STATUS_WORD will clear both the BUSY bit and UNKNOWN bit, if set.

Copyright © 2024 Texas Instruments Incorporated

7.56 (7Ah) STATUS_VOUT

CMD Address	7Ah
Write Transaction:	Write Byte
Read Transaction:	Read Byte
Format:	Unsigned Binary (1 byte)
Phased:	No
NVM Back-up:	No
Updates:	On-the-fly

The STATUS_VOUT command returns one data byte with contents as follows. All supported bits can be cleared either by CLEAR_FAULTS, or individually by writing 1b to the (7Ah) STATUS_VOUT register in their position, per the PMBus 1.3.1 Part II specification section 10.2.4.

Figure 7-55. (7Ah) STATUS_VOUT Register Map

7	6	5	4	3	2	1	0
RW	RW	RW	RW	RW	RW	R	R
VOUT_OVF	VOUT_OVW	VOUT_UVW	VOUT_UVF	VOUT_MIN_MAX	TON_MAX	0	0

LEGEND: R/W = Read/Write; R = Read only

Table 7-55. Register Field Descriptions

Bit	Field	Access	Reset	Description
7	VOUT_ OVF	RW	0b	0b: Latched flag indicating VOUT OV fault has NOT occurred. 1b: Latched flag indicating a VOUT OV fault has occurred. Note: the mask bits for VOUT_ OVF will mask fixed, tracking, and pre-biased OVP. These can be individually controlled in SMBALERT_ MASK_ EXTENDED.
6	VOUT_ OVW	RW	0b	0b: Latched flag indicating VOUT OV warn has NOT occurred. 1b: Latched flag indicating a VOUT OV warn has occurred. Note: the mask bits for VOUT_ OVF will mask fixed and tracking Overvoltage Protection.
5	VOUT_ UVW	RW	0b	0b: Latched flag indicating VOUT UV warn has NOT occurred. 1b: Latched flag indicating a VOUT UV warn has occurred.
4	VOUT_ UVF	RW	0b	0b: Latched flag indicating VOUT UV fault has NOT occurred. 1b: Latched flag indicating a VOUT UV fault has occurred.
3	VOUT_ MIN_MAX	RW	0b	0b: Latched flag indicating a VOUT_ MIN_MAX has NOT occurred. 1b: Latched flag indicating a VOUT_ MIN_MAX has occurred.
2	TON_ MAX	RW	0b	0b: Latched flag indicating a TON_ MAX has NOT occurred. 1b: Latched flag indicating a TON_ MAX has occurred.
1:0	Not supported	R	00b	Not supported and always set to 00b.

All bits which can trigger SMBALERT have a corresponding bit in SMBALERT_MASK.

Copyright © 2024 Texas Instruments Incorporated

7.57 (7Bh) STATUS_IOUT

CMD Address	7Bh
Write Transaction:	Write Byte
Read Transaction:	Read Byte
Format:	Unsigned Binary (1 byte)
Phased:	Yes
NVM Back-up:	No
Updates:	On-the-fly

The STATUS_IOUT command returns one data byte with contents as follows. All supported bits can be cleared either by CLEAR_FAULTS, or individually by writing 1b to the (7Bh) STATUS_IOUT register in their position, per the PMBus 1.3.1 Part II specification section 10.2.4.

Figure 7-56. (7Bh) STATUS_IOUT Register Map

7	6	5	4	3	2	1	0
RW	R	RW	RW	R	R	R	R
IOUT_OCF	0	IOUT_OCW	0	0	0	0	0

LEGEND: R/W = Read/Write; R = Read only

Table 7-56. Register Field Descriptions

Bit	Field	Access	Reset	Description
7	IOUT_ OCF	RW	0b	0b: Latched flag indicating IOUT OC fault has NOT occurred. 1b: Latched flag indicating IOUT OC fault has occurred.
6	Not Supported	R	0b	Not supported and always set to 0b.
5	IOUT_ OCW	RW	0b	0b: Latched flag indicating IOUT OC warn has NOT occurred. 1b: Latched flag indicating IOUT OC warn has occurred.
4	IOUT_UCF	RW	0b	0b: Latched flag indicating IOUT UC fault has NOT occurred. 1b: Latched flag indicating IOUT UC fault has occurred.
3:0	Not Supported	R	0000b	Not supported and always set to 0000b.

All bits which can trigger SMBALERT have a corresponding bit in SMBALERT_MASK.

Copyright © 2024 Texas Instruments Incorporated

7.58 (7Ch) STATUS_INPUT

CMD Address	7Ch
Write Transaction:	Write Byte
Read Transaction:	Read Byte
Format:	Unsigned Binary (1 byte)
Phased:	Yes
NVM Back-up:	No
Updates:	On-the-fly

The STATUS_INPUT command returns one data byte with contents as follows. All supported bits can cleared either by CLEAR_FAULTS, or individually by writing 1b to the (7Ch) STATUS_INPUT register in their position, per the PMBus 1.3.1 Part II specification section 10.2.4.

Figure 7-57. (7Ch) STATUS_INPUT Register Map

7	6	5	4	3	2	1	0
RW	R	RW	R	RW	R	R	R
VIN_OVF	0	VIN_UVW	0	LOW_VIN	0	0	0

LEGEND: R/W = Read/Write; R = Read only

Table 7-57. Register Field Descriptions

Bit	Field	Access	Reset	Description
7	VIN_OVF	RW	0b	0b: Latched flag indicating PVIN OV fault has NOT occurred. 1b: Latched flag indicating PVIN OV fault has occurred.
6	VIN_OVW	RW	0b	Not supported and always set to 0b
5	VIN_UVW		0b	0b: Latched flag indicating PVIN UV warn occurred. 1b: Latched flag indicating PVIN UV warn has occurred.
4	Not Supported	R	0b	Not supported and always set to 0b.
3	LOW_ VIN	RW	0b	LIVE (unlatched) status bit. Showing the value of PVIN relative to VIN_ON and VIN_OFF. 0b: PVIN is ON. 1b: PVIN is OFF.
2:0	Not Supported	R	000b	Not supported and always set to 000b.

All bits which may trigger SMBALERT have a corresponding bit in SMBALERT_MASK .

LOW_VIN vs VIN_UVW

The LOW_VIN bit is an information only (will not assert SMBALERT) flag which indicates that the device is not converting power because its PVIN voltage is less than VIN_ON or the VDD5 voltage is less than its UVLO to enable conversion. LOW_VIN asserts initially at reset but does not assert SMBALERT.

The VIN_UVW bit is a latched status bit, may assert SMBALERT if it is triggered to alert the host of an input voltage issue. VIN_UVW IS masked until the first time the sensed input voltage exceeds the VIN_ON threshold.

Copyright © 2024 Texas Instruments Incorporated

7.59 (7Dh) STATUS_TEMPERATURE

CMD Address	7Dh
Write Transaction:	Write Byte
Read Transaction:	Read Byte
Format:	Unsigned Binary (1 byte)
Phased:	Yes
NVM Back-up:	No
Updates:	On-the-fly

The STATUS_TEMPERATURE command returns one data byte with contents as follows. All supported bits can be cleared either by CLEAR_FAULTS, or individually by writing 1b to the (7Dh) STATUS_TEMPERATURE register in their position, per the PMBus 1.3.1 Part II specification section 10.2.4.

Figure 7-58. (7Dh) STATUS_TEMPERATURE Register Map

7	6	5	4	3	2	1	0
RW	RW	R	R	R	R	R	R
OTF	OTW	0	0	0	0	0	0

LEGEND: R/W = Read/Write; R = Read only

Table 7-58. Register Field Descriptions

Bit	Field	Access	Reset	Description
7	OTF	RW	0b	0b: Latched flag indicating OT fault has NOT occurred. 1b: Latched flag indicating OT fault has occurred.
6	OTW	RW	0b	0b: Latched flag indicating OT warn has NOT occurred. 1b: Latched flag indicating OT warn has occurred
5:0	Not supported	R	0d	Not supported and always set to 000000b.

All bits which can trigger SMBALERT have a corresponding bit in SMBALERT_MASK.

Copyright © 2024 Texas Instruments Incorporated

7.60 (7Eh) STATUS_CML

CMD Address	7Eh
Write Transaction:	Write Byte
Read Transaction:	Read Byte
Format:	Unsigned Binary (1 byte)
Phased:	Yes
NVM Back-up:	No
Updates:	On-the-fly

The STATUS_CML command returns one data byte with contents relating to communications, logic, and memory as follows. All supported bits can be cleared either by CLEAR_FAULTS, or individually by writing 1b to the (7Eh) STATUS_CML register in their position, per the PMBus 1.3.1 Part II specification section 10.2.4.

Figure 7-59. (7Eh) STATUS_CML Register Map

7	6	5	4	3	2	1	0
RW	RW	RW	RW	RW	R	RW	R
IVC	IVD	PEC	MEM	PROC_FLT	0	COMM	0

LEGEND: R/W = Read/Write; R = Read only

Table 7-59. Register Field Descriptions

Bit	Field	Access	Reset	Description
7	IVC	RW	0b	0b: Latched flag indicating invalid or unsupported command was NOT received. 1b: Latched flag indicating an invalid or unsupported command was received.
6	IVD	RW	0b	0b: Latched flag indicating invalid or unsupported data was NOT received. 1b: Latched flag indicating an invalid or unsupported data was received.
5	PEC	RW	0b	0b: Latched flag indicating NO packet error check has failed. 1b: Latched flag indicating a packet error check has failed.
4	MEM	RW	0b	0b: Latched flag indicating NO memory error was detected. 1b: Latched flag indicating a memory error was detected.
3	PROC_FLT	RW	0b	0b: Latched flag indicating NO logic core error was detected. 1b: Latched flag indicating a logic core error was detected.
2	Not supported	R	0b	Not supported and always set to 0b.
1	COMM	RW	0b	0b: Latched flag indicating NO communication error detected. 1b: Latched flag indicating communication error detected.
0	Not supported	R	0b	Not supported and always set to 0b.

All bits which can trigger SMBALERT have a corresponding bit in SMBALERT_MASK.

Loop Followers will report a Back-Channel communications issue as a CML fault on their phase.

The corresponding bit STATUS_BYTE is an OR'ing of the supported bits in this command. When a fault condition in this command occurs, the corresponding bit in STATUS_BYTE is updated. Likewise, if this byte is individually cleared (for example, by a write of 1 to a latched condition), it must clear the corresponding bit in STATUS_BYTE.

Copyright © 2024 Texas Instruments Incorporated

7.61 (7Fh) STATUS_OTHER

CMD Address	7Fh
Write Transaction:	Write Byte
Read Transaction:	Read Byte
Format:	Unsigned Binary (1 byte)
Phased:	No
NVM Back-up:	No
Updates:	On-the-fly

The STATUS_OTHER command returns one data byte with information not specified in the other STATUS bytes.

Figure 7-60. (7Fh) STATUS_OTHER Register Map

7	6	5	4	3	2	1	0
R	R	R	R	R	R	R	RW
0	0	0	0	0	0	0	FIRST_ TO_ALERT

LEGEND: R/W = Read/Write; R = Read only

Table 7-60. Register Field Descriptions

Bit	Field	Access	Reset	Description
7:1	Reserved	R	0h	Reserved
0	FIRST_ TO_ ALERT	RW	0b	0b: Latched flag indicating that this device was NOT the first to assert SMBALERT. This can mean either that the SMBALERT signal is not asserted (or has since been cleared), or that it is asserted, but this device was not the first on the bus to assert it. 1b: Latched flag indicating that this device was the first to assert SMBALERT.

The corresponding bit STATUS_BYTE is an OR'ing of the supported bits in this command. When a fault condition in this command occurs, the corresponding bit in STATUS_BYTE is updated. Likewise, if this byte is individually cleared (for example, by a write of 1 to a latched condition), it must clear the corresponding bit in STATUS_BYTE.

Copyright © 2024 Texas Instruments Incorporated

7.62 (80h) STATUS_MFR_SPECIFIC

CMD Address	80h
Write Transaction:	Write Byte
Read Transaction:	Read Byte
Format:	Unsigned Binary (1 byte)
Phased:	Yes
NVM Back-up:	No
Updates:	On-the-fly

The STATUS_MFR_SPECIFIC command returns one data byte with contents regard of communications, logic, and memory as follows. All supported bits may be cleared either by CLEAR_FAULTS, or individually by writing 1b to the (80h) STATUS_MFR_SPECIFIC register in their position, per the PMBus 1.3.1 Part II specification section 10.2.4.

Figure 7-61. (80h) STATUS_MFR_SPECIFIC Register Map

7	6	5	4	3	2	1	0
RW	R	R	R	RW	RW	RW	R
POR	SELF	0	0	RESET	BCX	SYNC	0

LEGEND: R/W = Read/Write; R = Read only

Table 7-61. Register Field Descriptions

Bit	Field	Access	Reset	Description
7	POR	RW	0b	0: No Power-On Reset Fault has been detected. 1: A Power-On Reset Fault has been detected. This bit must be set if: Power-On Self-Check of Internal Trim values, USER_STORE NVM check-sum, or Pin Detection reports an invalid result.
6	SELF	R	0b	LIVE (unlatched) status bit. Showing the status of the Power-On Self-Check. 0b: Power On Self-Check is complete. All expected BCX Loop Followers have responded. 1b: Power-On Self-Check is in progress. One or more BCX Loop Followers have not responded.
5:4	Not supported	R	00b	Not supported and always set to 00b.
3	RESET	RW	0b:	0b: A RESET_ VOUT event has NOT occurred. 1b: A RESET_ VOUT event has occurred.
2	BCX	RW	0b	0b: A BCX fault event has NOT occurred. 1b: A BCX fault event has occurred.
1	SYNC	RW	0b	0b: No SYNC fault has been detected. 1b: A SYNC fault has been detected.
0	Not supported	R	0b	Not supported and always set to 0b.

Per the PMBus Spec writing a 1 to any bit in a STATUS register shall clear that bit if it is set. All bits which may trigger SMBALERT have a corresponding bit in SMBALERT_MASK.

Copyright © 2024 Texas Instruments Incorporated

7.63 (88h) READ_VIN

CMD Address	88h
Write Transaction:	N/A
Read Transaction:	Read Word
Format:	SLINEAR11 per CAPABILITY
Phased:	Yes
NVM Back-up:	No
Update Rate:	1ms
Supported Range:	0 - 24 V

The READ_VIN command returns the output current in amperes.

Figure 7-62. (88h) READ_VIN Register Map

15	14	13	12	11	10	9	8
R	R	R	R	R	R	R	R
READ_VIN_EXP					READ_VIN_MAN		
7	6	5	4	3	2	1	0
R	R	R	R	R	R	R	R
READ_VIN_MAN							

LEGEND: R/W = Read/Write; R = Read only

Table 7-62. Register Field Descriptions

Bit	Field	Access	Reset	Description
15:11	READ_ VIN_ EXP	RW	Input voltage	Linear format two's complement exponent
10:0	READ_ VIN_ MAN	RW	Input voltage	Linear format two's complement mantissa

Attempts to write read-only commands cause the CML: invalid command (IVC) fault condition, the TPSM8S6B24S responds as follows:

- Set the CML bit in STATUS_BYTE.
- Set the CML_IVC (bit 7) bit in STATUS_CML.
- Notifying the host according to the PMBus 1.3.1 Part II specification section 10.9.3.

PHASE Behavior

When PHASE = FFh, READ_VIN returns the PVIN voltage of the Loop Controller device.

When PHASE != FFh, READ_VIN returns the PVIN voltage of the device assigned to the current PHASE.

Copyright © 2024 Texas Instruments Incorporated

7.64 (8Bh) READ_VOUT

CMD Address	8Bh
Write Transaction:	N/A
Read Transaction:	Read Word
Format:	ULINEAR16 per VOUT_MODE.
Phased:	Yes
NVM Back-up:	No
Update Rate:	1 ms
Supported Range	0 V to 6.0 V

The READ_VOUT command returns the actual, measured output voltage.

Figure 7-63. (8Bh) READ_VOUT Register Map

15	14	13	12	11	10	9	8
R	R	R	R	R	R	R	R
READ_VOUT							
7	6	5	4	3	2	1	0
R	R	R	R	R	R	R	R
READ_VOUT							

LEGEND: R/W = Read/Write; R = Read only

Table 7-63. Register Field Descriptions

Bit	Field	Access	Reset	Description
15:0	READ_ VOUT	RW	Current Status	Output voltage reading, per VOUT_ MODE

READ_VOUT will report the voltage at the VOSNS pin with respect to AGND when a device is configured as a Loop Follower (GOSNS = BP1V5). In this configuration, VOUT_SCALE_LOOP is ignored and VOSNS must be externally scaled to maintain a voltage between 0 V and 0.75 V for proper reporting of the VOSNS voltage.

Attempts to write read-only commands cause the CML: invalid command (IVC) fault condition, the TPSM8S6B24S responds as follows:

- Set the CML bit in STATUS_BYTE.
- Set the CML_IVC (bit 7) bit in STATUS_CML.
- Notifying the host according to the PMBus 1.3.1 Part II specification section 10.9.3.

Copyright © 2024 Texas Instruments Incorporated

7.65 (8Ch) READ_IOUT

CMD Address	8Ch
Write Transaction:	N/A
Read Transaction:	Read Word
Format:	SLINEAR11 per CAPABILITY
Phased:	Yes
NVM Back-up:	No
Update Rate:	1 ms
Supported Range:	-15 A to 90 A per Phase

The READ_IOUT command returns the output current in amperes.

Figure 7-64. (8Ch) READ_IOUT Register Map

15	14	13	12	11	10	9	8
R	R	R	R	R	R	R	R
READ_IOUT_EXP					READ_IOUT_MAN		
7	6	5	4	3	2	1	0
R	R	R	R	R	R	R	R
READ_IOUT_MAN							

LEGEND: R/W = Read/Write; R = Read only

Table 7-64. Register Field Descriptions

Bit	Field	Access	Reset	Description
15:11	READ_ IOUT_ EXP	RW	Current Status	Linear format two's complement exponent
10:0	READ_ IOUT_ MAN	RW	Current Status	Linear format two's complement mantissa

Attempts to write read-only commands cause the CML: invalid command (IVC) fault condition, the TPSM8S6B24S responds as follows:

- Set the CML bit in STATUS_BYTE.
- Set the CML_IVC (bit 7) bit in STATUS_CML.
- Notifying the host according to the PMBus 1.3.1 Part II specification section 10.9.3.

PHASE Behavior

When PHASE = FFh, READ_IOUT returns the total current for the stack of devices supporting a single output.

When PHASE != FFh, READ_IOUT returns the measured current of the device assigned to the current PHASE.

Copyright © 2024 Texas Instruments Incorporated

7.66 (8Dh) READ_TEMPERATURE_1

CMD Address	8Dh
Write Transaction:	N/A
Read Transaction:	Read Word
Format:	SLINEAR11 per CAPABILITY
Phased:	Yes
NVM Back-up:	No
Update Rate:	300 µs
Supported Range:	-40°C to 175°C

The READ_TEMPERATURE_1 command returns the maximum power stage temperature in degrees Celsius.

Figure 7-65. (8Dh) READ_TEMPERATURE_1 Register Map

15	14	13	12	11	10	9	8
R	R	R	R	R	R	R	R
READ_T1_EXP					READ_T1_MAN		
7	6	5	4	3	2	1	0
R	R	R	R	R	R	R	R
READ_T1_MAN							

LEGEND: R/W = Read/Write; R = Read only

Table 7-65. Register Field Descriptions

Bit	Field	Access	Reset	Description
15:11	READ_ T1_ EXP	RW	Current Status	Linear format two's complement exponent. LSB = 1°C
10:0	READ_ T1_ MAN	RW	Current Status	Linear format two's complement mantissa

Attempts to write read-only commands cause the CML: invalid command (IVC) fault condition, the TPSM8S6B24S responds as follows:

- Set the CML bit in STATUS_BYTE.
- Set the CML_IVC (bit 7) bit in STATUS_CML.
- Notifying the host according to the PMBus 1.3.1 Part II specification section 10.9.3.

PHASE Behavior

When PHASE = FFh, READ_TEMPERATURE_1 returns the temperature of the hottest of device in the stack of devices supporting a single output.

When PHASE ! = FFh, READ_TEMPERATURE_1 returns the measured temperature of the device assigned to the current PHASE.

Copyright © 2024 Texas Instruments Incorporated

7.67 (98h) PMBUS_REVISION

CMD Address	98h
Write Transaction:	N/A
Read Transaction:	Read Byte
Format:	Unsigned Binary (1 byte)
Phased:	No
Max Transaction Time:	0.25 ms

The PMBUS_REVISION command reads the revision of the PMBus to which the device is compliant.

Figure 7-66. (98h) PMBUS_REVISION Register Map

7	6	5	4	3	2	1	0
R	R	R	R	R	R	R	R
PART_I				PART_II			

LEGEND: R/W = Read/Write; R = Read only

Table 7-66. Register Field Descriptions

Bit	Field	Access	Reset	Description
7:4	PART_ I	R	0011b	0011b: Compliant to PMBus Rev 1.3, Part 1
3:0	PART_ II	R	0011b	0011b: Compliant to PMBus Rev 1.3, Part 2

Attempts to write read-only commands cause the CML: invalid command (IVC) fault condition, the TPSM8S6B24S responds as follows:

- Set the CML bit in STATUS_BYTE.
- Set the CML_IVC (bit 7) bit in STATUS_CML.
- Notifying the host according to the PMBus 1.3.1 Part II specification section 10.9.3.

Copyright © 2024 Texas Instruments Incorporated

7.68 (99h) MFR_ID

CMD Address	99h
Write Transaction:	Write Block
Read Transaction:	Read Block
Format:	Unsigned Binary (3 bytes)
Phased:	No
NVM Back-up:	EEPROM

The MFR_ID command loads the unit with 3 bytes that contains the manufacturer's ID. This is typically done once at the time of manufacture.

Figure 7-67. (99h) MFR_ID Register Map

23	22	21	20	19	18	17	16
RW	RW	RW	RW	RW	RW	RW	RW
MFR_ID							
15	14	13	12	11	10	9	8
RW	RW	RW	RW	RW	RW	RW	RW
MFR_ID							
7	6	5	4	3	2	1	0
RW	RW	RW	RW	RW	RW	RW	RW
MFR_ID							

LEGEND: R/W = Read/Write; R = Read only

Table 7-67. Register Field Descriptions

Bit	Field	Access	Reset	Description
23:0	MFR_ ID	RW	NVM	3 bytes of arbitrarily writable user-store NVM for manufacturer ID information.

Copyright © 2024 Texas Instruments Incorporated

7.69 (9Ah) MFR_MODEL

CMD Address	9Ah
Write Transaction:	Write Block
Read Transaction:	Read Block
Format:	Unsigned Binary (3 bytes)
Phased:	No
NVM Back-up:	EEPROM

The MFR_MODEL command loads the unit with 3 bytes that contains the manufacturer's ID. This is typically done once at the time of manufacture.

Figure 7-68. (9Ah) MFR_MODEL Register Map

23	22	21	20	19	18	17	16
RW	RW	RW	RW	RW	RW	RW	RW
MFR_MODEL							
15	14	13	12	11	10	9	8
RW	RW	RW	RW	RW	RW	RW	RW
MFR_MODEL							
7	6	5	4	3	2	1	0
RW	RW	RW	RW	RW	RW	RW	RW
MFR_MODEL							

LEGEND: R/W = Read/Write; R = Read only

Table 7-68. Register Field Descriptions

Bit	Field	Access	Reset	Description
23:0	MFR_MODEL	RW	NVM	3 bytes of arbitrarily writable user-store NVM for manufacturer model information

Copyright © 2024 Texas Instruments Incorporated

7.70 (9Bh) MFR_REVISION

CMD Address	9Bh
Write Transaction:	Write Block
Read Transaction:	Read Block
Format:	Unsigned Binary (3 bytes)
Phased:	No
NVM Back-up:	EEPROM

The MFR_REVISION command loads the unit with 3 bytes that contains the power supply manufacturer's revision number. This is typically done once at the time of manufacture.

Figure 7-69. (9Bh) MFR_REVISION Register Map

23	22	21	20	19	18	17	16
RW	RW	RW	RW	RW	RW	RW	RW
MFR_REV							
15	14	13	12	11	10	9	8
RW	RW	RW	RW	RW	RW	RW	RW
MFR_REV							
7	6	5	4	3	2	1	0
RW	RW	RW	RW	RW	RW	RW	RW
MFR_REV							

LEGEND: R/W = Read/Write; R = Read only

Table 7-69. Register Field Descriptions

Bit	Field	Access	Reset	Description
23:0	MFR_ REV	RW	NVM	3 bytes of arbitrarily writable user-store NVM for manufacturer revision information

Copyright © 2024 Texas Instruments Incorporated

7.71 (9Eh) MFR_SERIAL

CMD Address	9Eh
Write Transaction:	Write Block
Read Transaction:	Read Block
Format:	Unsigned Binary (3 bytes)
Phased:	No
NVM Back-up:	EEPROM

The MFR_SERIAL command loads the unit with 3 bytes that contains the power supply manufacturer's serial number. This is typically done once at the time of manufacture.

Figure 7-70. (9Eh) MFR_SERIAL Register Map

23	22	21	20	19	18	17	16
RW	RW	RW	RW	RW	RW	RW	RW
MFR_SERIAL							
15	14	13	12	11	10	9	8
RW	RW	RW	RW	RW	RW	RW	RW
MFR_SERIAL							
7	6	5	4	3	2	1	0
RW	RW	RW	RW	RW	RW	RW	RW
MFR_SERIAL							

LEGEND: R/W = Read/Write; R = Read only

Table 7-70. Register Field Descriptions

Bit	Field	Access	Reset	Description
23:00	MFR_SERIAL	RW	NVM	Arbitrary 3-byte Serial Number assigned by manufacturer

Note: Because the value for MFR_SERIAL is included in the NVM memory store used to calculate the NVM_CHECKSUM, assigning a unique MFR_SERIAL value will also result in a unique NVM_CHECKSUM value.

Copyright © 2024 Texas Instruments Incorporated

7.72 (ADh) IC_DEVICE_ID

CMD Address	ADh
Write Transaction:	N/A
Read Transaction:	Read Block
Format:	Unsigned Binary (6 bytes)
Phased:	No

The IC_DEVICE_ID command is used to either set or read the type or part number of an IC embedded within a PMBus that is used for the PMBus interface.

Figure 7-71. (ADh) IC_DEVICE_ID Register Map

47	46	45	44	43	42	41	40
R	R	R	R	R	R	R	R
IC_DEVICE_ID[47:40]							
39	38	37	36	35	34	33	32
R	R	R	R	R	R	R	R
IC_DEVICE_ID[39:32]							
31	30	29	28	27	26	25	24
R	R	R	R	R	R	R	R
IC_DEVICE_ID[31:24]							
23	22	21	20	19	18	17	16
R	R	R	R	R	R	R	R
IC_DEVICE_ID[23:16]							
15	14	13	12	11	10	9	8
R	R	R	R	R	R	R	R
IC_DEVICE_ID[15:8]							
7	6	5	4	3	2	1	0
R	R	R	R	R	R	R	R
IC_DEVICE_ID[7:0]							

LEGEND: R/W = Read/Write; R = Read only

Table 7-71. Register Field Descriptions

Bit	Field	Access	Reset	Description
47:0	IC_ DEVICE_ ID	R	See text.	See the table below.

Table 7-72. IC_DEVICE_ID Values

Byte Number (Bit Indices)	Byte 0 (7:0)	Byte 1 (15:8)	Byte 2 (23:16)	Byte 3 (31:24)	Byte 4 (39:32)	Byte 5 (47:40)
TPSM8S6B24S	54h	49h	54h	6Bh	24h	62h

Attempts to write read-only commands cause the CML: invalid command (IVC) fault condition, TPSM8S6B24S responds as follows:

- Set the CML bit in STATUS_BYTE.
- Set the CML_IVC (bit 7) bit in STATUS_CML.
- Notifying the host according to the PMBus 1.3.1 Part II specification section 10.9.3.

Copyright © 2024 Texas Instruments Incorporated

7.73 (AEh) IC_DEVICE_REV

CMD Address	AEh
Write Transaction:	N/A
Read Transaction:	Read Block
Format:	Unsigned Binary (2 bytes)
Phased:	No

The IC_DEVICE_REV command is used to either set or read the revision of the IC.

Figure 7-72. (AEh) IC_DEVICE_REV Register Field Descriptions

15	14	13	12	11	10	9	8
R	R	R	R	R	R	R	R
MAJOR_REV				MINOR_REV			
7	6	5	4	3	2	1	0
R	R	R	R	R	R	R	R
SUB_MINOR_REV							

LEGEND: R/W = Read/Write; R = Read only

Attempts to write read-only commands cause the CML: invalid command (IVC) fault condition, the TPSM8S6B24S responds as follows:

- Set the CML bit in STATUS_BYTE.
- Set the CML_IVC (bit 7) bit in STATUS_CML.

Notifying the host according to the PMBus 1.3.1 Part II specification section 10.9.3.

Copyright © 2024 Texas Instruments Incorporated

7.74 (B1h) USER_DATA_01 (COMPENSATION_CONFIG)

CMD Address	B1h
Write Transaction:	Write Block
Read Transaction:	Read Block
Format:	Unsigned Binary (5 bytes)
Phased:	No
NVM Back-up:	EEPROM or Pin Detection
Updates:	Conversion Disable: on-the-fly. Conversion Enable: hardware update blocked. To update hardware after write while enabled, store to NVM with (15h) STORE_USER_ALL and (16h) RESTORE_USER_ALL or cycle AVIN below UVLO.

Configure the control loop compensation.

Figure 7-73. (B1h) USER_DATA_01 (COMPENSATION_CONFIG) Register Map

39	38	37	36	35	34	33	32
RW	RW	RW	RW	RW	RW	RW	RW
SEL_CZI[1:0]		SEL_CPI[4:0]					SEL_CZI_MUL
31	30	29	28	27	26	25	24
R	RW	RW	RW	RW	RW	RW	RW
SEL_RVI[5:0]						SEL_CZI[3:2]	
23	22	21	20	19	18	17	16
RW	RW	RW	RW	RW	RW	RW	RW
SEL_CZV[1:0]		SEL_CPV[4:0]					0
15	14	13	12	11	10	9	8
RW	RW	RW	RW	RW	RW	RW	RW
SEL_RVV[5:0]						SEL_CZV[3:2]	
7	6	5	4	3	2	1	0
RW	RW	RW	RW	RW	RW	RW	RW
0	0	SEL_GMV[1:0]		0	0	SEL_GMI[1:0]	

LEGEND: R/W = Read/Write; R = Read only

Table 7-73. Register Field Descriptions

Bit	Field	Access	Reset	Description
25:24,39:38	SEL_CZI[3:0]	RW	NVM	Selects the value of current loop integrating capacitor. CZI = 6.66 pF x CZI_MUL x $2^{SEL_GMI[1:0]}$ x SEL_CZI[3:0]
37:33	SEL_CPI[4:0]	RW	NVM	Selects the value of current loop filter capacitor. CPI = 3.2 pF x SEL_CPI[4:0]
32	SEL_CZI_MUL	RW	NVM	Selects the value of current loop integrating capacitor multiplier. 0b: CZI_MUL = 1 1b: CZI_MUL = 2
31:26	SEL_RVI[5:0]	RW	NVM	Selects the value of current loop mid-band gain resistor. RVI = 5 kΩ x SEL_RVI[5:0]
9:8, 23:22	SEL_CZV[3:0]	RW	NVM	Selects the value of voltage loop integrating capacitor. CZV = 125 pF x $2^{SEL_GMV[1:0]}$ x SEL_CZV[3:0]
21:17	SEL_CPV[4:0]	RW	NVM	Selects the value of voltage loop filter capacitor. CPV = 6.25 pF x SEL_CPV[4:0]
16	Reserved	RW	NVM	Reserved, set to 0b
15:10	SEL_RVV[5:0]	RW	NVM	Selects the value of voltage loop mid-band gain resistor. RVV = 5 kΩ x SEL_RVV[5:0]

Copyright © 2024 Texas Instruments Incorporated

Table 7-73. Register Field Descriptions (continued)

Bit	Field	Access	Reset	Description
7:6	Reserved	RW	NVM	Reserved, set to 00b
5:4	SEL_GMV[1:0]	RW	NVM	Selects the value of voltage error transconductance. GMV = 25 µS x $2^{SEL_GMV[1:0]}$
3:2	Reserved	RW	NVM	Reserved, set to 00b
1:0	SEL_GMI[1:0]	RW	NVM	Selects the value of current error transconductance. GMI = 25 µS x $2^{SEL_GMI[1:0]}$

(B1h) USER_DATA_01 (COMPENSATION_CONFIG) can be written to while output conversion is enabled, but updating those values to hardware will be blocked. To update the value used by the control loop:

- Disable conversion, then write to (B1h) USER_DATA_01 (COMPENSATION_CONFIG).
- Write to (B1h) USER_DATA_01 (COMPENSATION_CONFIG) while conversion is enabled, store PMBus values to NVM using (15h) STORE_USER_ALL, clear the (B1h) USER_DATA_01 (COMPENSATION_CONFIG) bit in (EEh) MFR_SPECIFIC_30 (PIN_DETECT_OVERRIDE), then cycle AVIN or use the (16h) RESTORE_USER_ALL command.

Due to the complexity of translating the 5-byte HEX value of (B1h) USER_DATA_01 (COMPENSATION_CONFIG) into analog compensation values, users are recommended to use the tools available on the *TPSM8S6x24 product folder* such as the *TPSM8S6x24 Compensation and Pin-Strap Resistor Calculator* design tool.

Copyright © 2024 Texas Instruments Incorporated

7.75 (B5h) USER_DATA_05 (POWER_STAGE_CONFIG)

CMD Address	B5h
Write Transaction:	Write Block (per PMBus Spec, even though 1 data byte)
Read Transaction:	Read Block (per PMBus Spec, even though 1 data byte)
Format:	Unsigned Binary (1 byte)
Phased:	No
NVM Back-up:	EEPROM
Updates:	On-the-fly
Max Transaction Time:	1.0 ms
Max Action Delay:	1.0 ms (not time critical)

POWER_STAGE_CONFIG allows the user to adjust the VDD5 regulator voltage.

Figure 7-74. (B5h) USER_DATA_05 (POWER_STAGE_CONFIG) Register Map

7	6	5	4	3	2	1	0
RW	RW	RW	RW	R	R	R	R
SEL_VDD5				Reserved			

LEGEND: R/W = Read/Write; R = Read only

Table 7-74. Register Field Descriptions

Bit	Field	Access	Reset	Description
7:4	SEL_VDD5	RW	NVM	3h: VDD5 = 3.9 V (Not Recommended for Production) 4h: VDD5 = 4.1 V 5h: VDD5 = 4.3 V 6h: VDD5 = 4.5 V 7h: VDD5 = 4.7 V 8h: VDD5 = 4.9 V 9h: VDD5 = 5.1 V Ah: VDD5 = 5.3 V Other: Invalid
3:0	Reserved	R	0000b	Reserved. Set to 0000b.

Setting 30h is not recommended for production use unless an external VDD5 voltage is provided because the 3.9-V LDO setting can result in a VDD5 voltage less than the VDD5 undervoltage lockout required to enable conversion and can result in the TPSM8S6B24S device being unable to enable conversion without an external VDD5 voltage.

Copyright © 2024 Texas Instruments Incorporated

7.76 (D0h) MFR_SPECIFIC_00 (TELEMETRY_CONFIG)

CMD Address	D0h
Write Transaction:	Write Block
Read Transaction:	Read Block
Format:	Unsigned Binary (6 bytes)
Phased:	No
NVM Back-up:	EEPROM
Updates:	On-The-Fly

Configure the priority and averaging for each channel of the internal telemetry system.

The internal telemetry system shares a single ADC across each measurement. The priority setting allows the user to adjust the relative rate of measurement of each telemetry value. The ADC will first measure each value with a priority A value. With each pass through all priority A measurements, one priority B measurement will be taken. With each pass through all priority B measurements, one priority C measurement will be taken.

Example: If output voltage has priority A and output current has priority B, and temperature has priority C, the telemetry sequence will be VOUT IOUT VOUT TEMPERATURE VOUT IOUT VOUT TEMPERATURE.

Figure 7-75. (D0h) MFR_SPECIFIC_00 (TELEMETRY_CONFIG) Register Map

47	46	45	44	43	42	41	40
RW	RW	RW	RW	RW	RW	RW	RW
Reserved priority		Reserved			Reserved averaging		
39	38	37	36	35	34	33	32
RW	RW	RW	RW	RW	RW	RW	RW
Reserved priority		Reserved			Reserved averaging		
31	30	29	28	27	26	25	24
R	RW	RW	RW	RW	RW	RW	RW
RD_VI_PRI		Reserved			RD_VI_AVG		
23	22	21	20	19	18	17	16
RW	RW	RW	RW	RW	RW	RW	RW
RD_TMP_PRI		Reserved			RD_TMP_AVG		
15	14	13	12	11	10	9	8
RW	RW	RW	RW	RW	RW	RW	RW
RD_IO_PRI		Reserved			RD_IO_AVG		
7	6	5	4	3	2	1	0
RW	RW	RW	RW	RW	RW	RW	RW
RD_VO_PRI		Reserved			RD_VO_AVG		

LEGEND: R/W = Read/Write; R = Read only

Table 7-75. Register Field Descriptions

Bit	Field	Access	Reset	Description
47:40	Not used	R	00h	Reserved. Set values to 00h.
39:32	Not used	RW	NVM	Reserved. Set values to 03h.
31:30	RD_VI_PRI	RW	NVM	00b: Assign priority A to input voltage telemetry. 01b: Assign priority B to input voltage telemetry. 10b: Assign priority C to input voltage telemetry. 11b: Disable input voltage telemetry.

Copyright © 2024 Texas Instruments Incorporated

Table 7-75. Register Field Descriptions (continued)

Bit	Field	Access	Reset	Description
31:24	RD_VI_AVG	RW	NVM	0d - 5d: READ_VIN Rolling average of 2^N samples 6d-7d: Invalid
23:22	RD_TMP_PRI	RW	NVM	00b: Assign priority A to temperature telemetry. 01b: Assign priority B to temperature telemetry. 10b: Assign priority C to temperature telemetry. 11b: Invalid
21:19	Reserved	RW	NVM	Reserved. Set to 000b.
18:16	RD_TMP_AVG	RW	NVM	0d - 5d: READ_TEMPERATURE_1 Rolling average of 2^N samples 6d-7d: Invalid
15:14	RD_IO_PRI	RW	NVM	00b: Assign priority A to output current telemetry. 01b: Assign priority B to output current telemetry. 10b: Assign priority C to output current telemetry. 11b: Disable output current telemetry.
13:11	Reserved	RW	NVM	Reserved. Set to 000b.
10:8	RD_IO_AVG	RW	NVM	0d - 5d: READ_IOUT Rolling average of 2^N samples 6d-7d: Invalid
7:6	RD_VO_PRI	RW	NVM	00b: Assign priority A to output voltage telemetry. 01b: Assign priority B to output voltage telemetry. 10b: Assign priority C to output voltage telemetry. 11b: Disable output voltage telemetry.
5:3	Reserved	RW	NVM	Reserved. Set to 000b.
2:0	RD_VO_AVG	RW	NVM	0d - 5d: READ_VOUT Rolling average of 2^N samples 6d-7d: Invalid

Disabling any telemetry value will force the associated READ PMBus command to report 0000h.

Because temperature telemetry is used for Overtemperature Protection, temperature telemetry cannot be disabled.

Copyright © 2024 Texas Instruments Incorporated

7.77 (DAh) MFR_SPECIFIC_10 (READ_ALL)

CMD Address	DAh
Write Transaction:	NA
Read Transaction:	Read Block
Format:	Unsigned Binary (14 bytes)
Phased:	No
NVM Back-up:	No

READ_ALL provides for a 14-byte BLOCK read of STATUS_WORD and telemetry values to improve bus utilization for poling by combining multiple READ functions into a single command, eliminating the need for multiple address and command code bytes.

Figure 7-76. (DAh) MFR_SPECIFIC_10 (READ_ALL) Register Map

111	110	109	108	107	106	105	104
R	R	R	R	R	R	R	R
Not Supported = 00h							
103	102	101	100	99	98	97	96
R	R	R	R	R	R	R	R
Not Supported = 00h							
95	94	93	92	91	90	89	88
R	R	R	R	R	R	R	R
Not Supported = 00h							
87	86	85	84	83	82	81	80
R	R	R	R	R	R	R	R
Not Supported = 00h							
79	78	77	76	75	74	73	72
R	R	R	R	R	R	R	R
READ_VIN (MSB)							
71	70	69	68	67	66	65	64
R	R	R	R	R	R	R	R
READ_VIN (LSB)							
63	62	61	60	59	58	57	56
R	R	R	R	R	R	R	R
READ_TEMPERATURE1 (MSB)							
55	54	53	52	51	50	49	48
R	R	R	R	R	R	R	R
READ_TEMPERATURE1 (LSB)							
47	46	45	44	43	42	41	40
R	R	R	R	R	R	R	R
READ_IOUT (MSB)							
39	38	37	36	35	34	33	32
R	R	R	R	R	R	R	R
READ_IOUT (LSB)							
31	30	29	28	27	26	25	24

Copyright © 2024 Texas Instruments Incorporated

R	R	R	R	R	R	R	R
READ_VOUT (MSB)							
23	22	21	20	19	18	17	16
R	R	R	R	R	R	R	R
READ_VOUT (LSB)							
15	14	13	12	11	10	9	8
R	R	R	R	R	R	R	R
STATUS_WORD (High Byte)							
7	6	5	4	3	2	1	0
R	R	R	R	R	R	R	R
STATUS_BYTE							

LEGEND: R/W = Read/Write; R = Read only

Table 7-76. Register Field Descriptions

Bit	Field	Access	Reset	Description
111:96	READ_ DUTY_CYC LE	R	0000h	Not supported = 0000h
95:80	READ_ IIN	R	0000h	Not supported = 0000h
79:64	READ_ VIN	R	0000h	READ_VIN (Linear Format)
63:48	READ_ TEMPERAT URE1	R	0000h	READ_ TEMPERATURE1 (Linear Format)
47:32	READ_ IOUT	R	0000h	READ_ IOUT (Linear Format)
31:16	READ_VOU T	R	0000h	READ_ VOUT (ULinear16 Format, Per VOUT_MODE)
15:0	STATUS_W ORD	R	0000h	STATUS_WORD

Attempts to write read-only commands cause the CML: invalid command (IVC) fault condition, the TPSM8S6B24S responds as follows:

- Set the CML bit in STATUS_BYTE.
- Set the CML_IVC (bit 7) bit in STATUS_CML.

Notifying the host according to the PMBus 1.3.1 Part II specification section 10.9.3.

Copyright © 2024 Texas Instruments Incorporated

7.78 (DBh) MFR_SPECIFIC_11 (STATUS_ALL)

CMD Address	DBh
Write Transaction:	NA
Read Transaction:	Read Block
Format:	Unsigned Binary (7 bytes)
Phased:	No
NVM Back-up:	No

STATUS_ALL provides for a 7-byte block of STATUS command codes. This can reduce bus utilization to read multiple faults.

Figure 7-77. (DBh) MFR_SPECIFIC_11 (STATUS_ALL) Register Map

55	54	53	52	51	50	49	48
R	R	R	R	R	R	R	R
STATUS_MFR							
47	46	45	44	43	42	41	40
R	R	R	R	R	R	R	R
STATUS_OTHER							
39	38	37	36	35	34	33	32
R	R	R	R	R	R	R	R
STATUS_CML							
31	30	29	28	27	26	25	24
R	R	R	R	R	R	R	R
STATUS_TEMPERATURE							
23	22	21	20	19	18	17	16
R	R	R	R	R	R	R	R
STATUS_INPUT							
15	14	13	12	11	10	9	8
R	R	R	R	R	R	R	R
STATUS_IOUT							
7	6	5	4	3	2	1	0
R	R	R	R	R	R	R	R
STATUS_VOUT							

LEGEND: R/W = Read/Write; R = Read only

Table 7-77. Register Field Descriptions

Bit	Field	Access	Reset	Description
55:48	STATUS_ MFR	R	Current Status	STATUS_ MFR
47:40	STATUS_ OTHER	R	Current Status	STATUS_ OTHER
39:32	STATUS_ CML	R	Current Status	STATUS_ CML
31:24	STATUS_ TEMPERATURE	R	Current Status	STATUS_ TEMPERATURE

Copyright © 2024 Texas Instruments Incorporated

Table 7-77. Register Field Descriptions (continued)

Bit	Field	Access	Reset	Description
23:16	STATUS_ INPUT	R	Current Status	STATUS_ INPUT
15:8	STATUS_ IOUT	R	Current Status	STATUS_ IOUT
7:0	STATUS_ VOUT	R	Current Status	STATUS_ VOUT

Attempts to write read-only commands cause the CML: invalid command (IVC) fault condition, the TPSM8S6B24S responds as follows:

- Set the CML bit in STATUS_BYTE.
- Set the CML_IVC (bit 7) bit in STATUS_CML.
- Notifying the host according to the PMBus 1.3.1 Part II specification section 10.9.3.

Writes to STATUS_ALL do not clear asserted status bits.

Copyright © 2024 Texas Instruments Incorporated

7.79 (DCh) MFR_SPECIFIC_12 (STATUS_PHASE)

CMD Address	DCh
Write Transaction:	Write Word
Read Transaction:	Read Word
Format:	Unsigned Binary (2 bytes)
Phased:	Yes
Updates:	On-the-fly
NVM Back-up:	No

When PHASE = FFh or 80h, reads to this command return a data word detailing which phases have experienced fault conditions. When PHASE != FFh, reads to this command return a data worddetailing which fault(s) the current PHASE has experienced. PHASE number assignment is per PHASE_CONFIG. Bits corresponding to unused (unassigned or disabled) phase numbers are always equal to 0b.

Figure 7-78. (DCh) MFR_SPECIFIC_12 (STATUS_PHASE)

15	14	13	12	11	10	9	8	7	6	5	4	3	2	1	0
R	R	R	R	RW	RW	RW	RW	RW	RW	RW	RW	RW	RW	RW	RW
0	0	0	0	0	0	0	0	0	0	0	0	PH3	PH2	PH1	PH0

LEGEND: R/W = Read/Write; R = Read only

Table 7-78. Register Field Descriptions

Bit	Field	Access	Reset	Description
15:4	Reserved	R	0b	Reserved
3	PH3	RW	0b	0b: The TPSM8S6B24S assigned to PHASE = 3d has NOT experienced a fault. 1b: The TPSM8S6B24S assigned to PHASE = 3d has experienced a fault. Set PHASE = 3d, and read STATUS_WORD or STATUS_ALL for more information.
2	PH2	RW	0b	0b: The TPSM8S6B24S assigned to PHASE = 2d has NOT experienced a fault. 1b: The TPSM8S6B24S assigned to PHASE = 2d has experienced a fault. Set PHASE = 2d, and read STATUS_WORD or STATUS_ALL for more information.
1	PH1	RW	0b	0b: The TPSM8S6B24S assigned to PHASE = 1d has NOT experienced a fault. 1b: The TPSM8S6B24S assigned to PHASE = 1d has experienced a fault. Set PHASE = 1d, and read STATUS_WORD or STATUS_ALL for more information.
0	PH0	RW	0b	0b: The TPSM8S6B24S assigned to PHASE = 0d has NOT experienced a fault. 1b: The TPSM8S6B24S assigned to PHASE = 0d has experienced a fault. Set PHASE = 0d, and read STATUS_WORD or STATUS_ALL for more information.

Copyright © 2024 Texas Instruments Incorporated

7.80 (E3h) MFR_SPECIFIC_19 (PGOOD_CONFIG)

CMD Address	E3h
Write Transaction:	Write Word
Read Transaction:	Read Word
Format	Unsigned Word
Phased:	No
NVM Backup:	EEPROM or Pin Detect
Updates:	Conversion Disable: see below. Conversion Enable: Read-Only

Figure 7-79. (E3h) MFR_SPECIFIC_19 (PGOOD_CONFIG) Register Map

15	14	13	12	11	10	9	8
R	R	R	R	R	R	R	R
PGOOD_OFF_DELAY[3:0]				PGOOD_ON_DELAY[3:0]			
7	6	5	4	3	2	1	0
R	R	R	R	RW	RW	RW	RW
pgmOVF	pgmOVW	pgmUVW	pgmUVF	pgmOCW	pgmOCF	pgmINOVW	pgmINOVF

LEGEND: R/W = Read/Write; R = Read only

Table 7-79. Register Field Descriptions

Bit	Field	Access	Reset	Description
15:12	PGOOD_OFF_DELAY[3:0]	RW	NVM	Sets Delay from the detection of an unmasked Fault or Warning event to the assertion of PGOOD low. 0d: Delay PGOOD high-low 1 PWM CLK 1d-15d: Delay PGOOD high-low 2^N+1 PWM CLKs
11:8	PGOOD_ON_DELAY[3:0]	RW	NVM	Sets Delay from the detection of no unmasked Fault or Warning events to the release of PGOOD low. 0d: Delay PGOOD low-hight to 1 PWM CLK 1d-15d: Delay PGOOD low-high 2^N+1 PWM CLKs
7	pgmOVF	RW	NVM	0b: Output Overvoltage Fault can assert PGOOD low. 1b: Output Overvoltage Fault cannot assert PGOOD low.
6	pgmOVW	RW	NVM	0b: Output Overvoltage Warning can assert PGOOD low. 1b: Output Overvoltage Warning cannot assert PGOOD low.
5	pgmUVF	RW	NVM	0b: Output Undervoltage Fault can assert PGOOD low. 1b: Output Undervoltage Fault cannot assert PGOOD low.
4	pgmUVW	RW	NVM	0b: Output Undervoltage Warning can assert PGOOD low. 1b: Output Undervoltage Warning cannot assert PGOOD low.
3	pgmOCW	RW	NVM	0b: Output Overcurrent Warning can assert PGOOD low. 1b: Output Overcurrent Warning cannot assert PGOOD low.
2	pgmOCF	RW	NVM	0b: Output Overcurrent Fault can assert PGOOD low. 1b: Output Overcurrent Fault cannot assert PGOOD low.
1	pgmINOVW	RW	NVM	0b: Input Overvoltage Warning can assert PGOOD low. 1b: Input Overvoltage Warning cannot assert PGOOD low.
0	pgmINOVF	RW	NVM	0b: Intput Overvoltage Fault can assert PGOOD low. 1b: Intput Overvoltage Fault cannot assert PGOOD low.

Power Good indicates the status of the converter. (E3h) MFR_SPECIFIC_19 (PGOOD_CONFIG) provides control of the delays asserting and releasing Power Good. Power Good is always low while conversion is

Copyright © 2024 Texas Instruments Incorporated

disabled, during (60h) TON_DELAY, (61h) TON_RISE, (65h) TOFF_FALL, and during a fault shut-down or hiccup delay. PGOOD_OFF_DELAY is bypassed during (65h) TOFF_FALL and during a fault shut-down or hiccup. Power Good will still be asserted on an unmasked fault event unless that fault's RESPONSE command is configured to Continue Operating without Interruption.

PGOOD_OFF_DELAY and PGOOD_ON_DELAY are sensed and timed independently from each other. If PGOOD_ON_DELAY is less than PGOOD_OFF_DELAY and an unmasked fault or warning event lasts less than PGOOD_OFF_DELAY - PGOOD_ON_DELAY, Power Good will not be asserted low during the fault or warning events.

Copyright © 2024 Texas Instruments Incorporated

7.81 (E4h) MFR_SPECIFIC_20 (SYNC_CONFIG)

CMD Address	E4h
Write Transaction:	Write Byte
Read Transaction:	Read Byte
Format:	Unsigned Binary
Phased:	No
NVM Back-up:	EEPROM or Pin Detect
Updates:	On-the-fly

Figure 7-80. (E4h) MFR_SPECIFIC_20 (SYNC_CONFIG) Register Map

7	6	5	4	3	2	1	0
RW	RW	RW	RW	RW	RW	RW	RW
SYNC_ DIR		SYNC_EDGE	10000b				

LEGEND: R/W = Read/Write; R = Read only

Table 7-80. Register Field Descriptions

Bit	Field	Access	Reset	Description
7:6	SYNC_DIR	RW	NVM	00b: SYNC disabled 01b: Enable SYNC OUT. 10b: Enable SYNC IN. 11b: Enable Auto Detect SYNC
5	SYNC_EDGE	RW	NVM	0b: Synchronize to falling edge of SYNC. 1b: Synchronize to rising edge of SYNC.
4:0	Not supported	RW	10000b	Not supported. Set to 10000b.

Attempts to write (E4h) MFR_SPECIFIC_E4 (SYNC_CONFIG) to any value outside those specified as valid will be considered invalid/unsupported data and cause the TPSM8S6B24S to respond by flagging the appropriate status bits and notifying the host according to the PMBus 1.3.1 Part II specification section 10.9.3.

When SYNC_DIR = 11b - Enable Auto Detect, the TPSM8S6B24S will select SYNC_IN or SYNC_OUT based on the state of the SYNC pin when the Enable Condition, as defined by ON_OFF_CONFIG is met. If the SYNC_PIN is >2 V or switching faster than 75% of FRQUENCY_SWITCH, SYNC_IN shall be enabled. If the SYNC_PIN is less than 0.8 V and not switching, SYNC_OUT will be selected.

Changing SYNC_DIR from SYNC_IN to SYNC_OUT on a multi-phase stack while conversion is enabled but prevented due to a SYNC_FAULT will result in the internal oscillator operating at 70% of its nominal frequency. Since this is out-side of the compliant SYNC_IN range of the Loop Follower device, this can result in unsynchronized operation.

Copyright © 2024 Texas Instruments Incorporated

7.82 (ECh) MFR_SPECIFIC_28 (STACK_CONFIG)

CMD Address	ECh
Write Transaction:	Write Word
Read Transaction:	Read Word
Format	Unsigned Word
Phased:	No
NVM Backup:	EEPROM or Pin Detect
Updates:	Conversion Disable: see below. Conversion Enable: Read-Only

Figure 7-81. (ECh) MFR_SPECIFIC_28 (STACK_CONFIG) Register Map

15	14	13	12	11	10	9	8
R	R	R	R	R	R	R	R
Reserved 0000h							
7	6	5	4	3	2	1	0
R	R	R	R	RW	RW	RW	RW
BCX_START				BCX_STOP			

LEGEND: R/W = Read/Write; R = Read only

Table 7-81. Register Field Descriptions

Bit	Field	Access	Reset	Description
15:8	Not supported	R	0000h	Reserved. Equal 0000h.
7:4	BCX_START	R	0000b	BCX_Address for Stack Loop Controller. Equal to 0000b.
3:0	BCX_STOP	RW	NVM	0000b: Stand Alone, Single-phase 0001b: One-Loop Follower, 2-phase 0010b: Two Loop Followers, 3-phase 0011b: Three Loop Followers, 4-phase Other: Not supported / Invalid

Attempts to write (ECh) MFR_SPECIFIC_28 (STACK_CONFIG) to any value outside those specified as valid, will be considered invalid/unsupported data and cause TPSM8S6B24S to respond by flagging the appropriate status bits and notifying the host according to the PMBus 1.3.1 Part II specification section 10.9.3.

Copyright © 2024 Texas Instruments Incorporated

7.83 (EDh) MFR_SPECIFIC_29 (MISC_OPTIONS)

CMD Address	EDh
Write Transaction:	Write Word
Read Transaction:	Read Word
Format:	Unsigned Binary (2 bytes)
Phased:	No
NVM Backup:	EEPROM
Updates:	on-the-fly

MFR_SPECIFIC_29 is used to configure miscellaneous settings.

Figure 7-82. (EDh) MFR_SPECIFIC_29 (MISC_OPTIONS) Register Map

15	14	13	12	11	10	9	8
RW	RW	RW	RW	RW	RW	RW	RW
PEC	RESET_CNT	RESET_FLT	RESET#	Reserved	Reserved	Reserved	Reserved
7	6	5	4	3	2	1	0
RW	RW	RW	RW	RW	RW	RW	RW
Reserved	Reserved	Reserved	Reserved	PULLUP#	FLT_CNT	ADC_RES	

LEGEND: R/W = Read/Write; R = Read only

Table 7-82. Register Field Descriptions

Bit	Field	Access	Reset	Description
15	PEC	RW	NVM	0b: PEC Optional. Transactions received without PEC byte will be processed. 1b: PEC Required. Transactions received without PEC byte will be rejected as invalid PEC.
14	RESET_CNT	RW	NVM	0b: VOUT_COMMAND will be unchanged following a shutdown. 1b: VOUT_COMMAND will be changed to VBOOT on a Control or OPERATION shutdown.
13	RESET_FLT	RW	NVM	0b: VOUT_COMMAND will be unchanged following a Fault Restart. 1b: VOUT_COMMAND will be changed to VBOOT on Restart from a Fault when Fault Retry is set to Retry after Fault.
12	RESET#	RW	NVM	Sets the function of the PGD/RST pin. 0b: PGD/RST functions as PGOOD and internal pullup is disabled. 1b: PGD/RST functions as RESET# and internal pullup is set by bit 3 PULLUP#.
11:3	Reserved	RW	NVM	Reserved. Must be 000000000b
3	PULLUP#	RW	NVM	Sets the pullup of the PGD/RST pin when RESET# = 1b. 0b: Internal pullup of PGD/RST pin enabled when RESET# = 1b. 1b: Internal pullup of PGD/RESET_B pin disabled when RESET# = 1b.
2	FLT_CNT	RW	NVM	0b: Fault Counter counts down one cycle on PWM cycle without fault 1b: Fault Counter resets counter to 0 on PWM cycle without fault
1:0	ADC_RES	RW	NVM	ADC Resolution Control 00b: Set ADC Resolution to 12-bit 01b: Set ADC Resolution to 10-bit 10b: Set ADC Resolution to 8-bit 11b: Set ADC Resolution to 6-bit

Copyright © 2024 Texas Instruments Incorporated

7.84 (EEh) MFR_SPECIFIC_30 (PIN_DETECT_OVERRIDE)

CMD Address	EEh
Write Transaction:	Write Word
Read Transaction:	Read Word
Format:	Unsigned Binary (1 byte)
Phased:	No
NVM Backup:	EEPROM
Updates:	on-the-fly (pin detection occurs on POR only).

PMBUS specified that NVM (Default or User) stored values will overwrite Pin Programmed Values. Setting a “1” in each bit of this register will prevent DEFAULT or USER STORE values from overwriting the Pin-Programmed Value associated that bit.

Figure 7-83. (EEh) MFR_SPECIFIC_30 (PIN_DETECT_OVERRIDE) Register Map

15	14	13	12	11	10	9	8
RW	RW	RW	RW	RW	RW	RW	RW
Reserved			STACK_CONFIG	SYNC_CONFIG	Reserved	COMP_CONFIG	ADDRESS
7	6	5	4	3	2	1	0
RW	RW	RW	RW	RW	RW	RW	RW
Reserved		INTERLEAVE	Reserved	TON_RISE	IOUT_OC	FREQ	VOUT

LEGEND: R/W = Read/Write; R = Read only

Table 7-83. Register Field Descriptions

Bit	Field	Access	Reset	Description
15:13	Reserved	RW	NVM	Not used and set to 000b.
12	STACK_CONFIG	RW	NVM	0b: At power-up or RESTORE, STACK_CONFIG will be reset to NVM value. 1b: At power-up or RESTORE, STACK_CONFIG will be reset to pin-detected value.
11	SYNC_CONFIG	RW	NVM	0b: At power-up or RESTORE, SYNC_CONFIG will be reset to NVM value. 1b: At power-up or RESTORE, SYNC_CONFIG will be reset to pin-detected value.
10	Reserved	RW	NVM	Not used and set to 0b or 1b.
9	COMP_CONFIG	RW	NVM	0b: At power-up or RESTORE, COMPENSATION_CONFIG will be reset to NVM value. 1b: At power-up or RESTORE, COMPENSATION_CONFIG will be reset to pin-detected value.
8	ADDRESS	RW	NVM	0b: At power-up or RESTORE, Loop Follower_ADDRESS will be reset to NVM value. 1b: At power-up or RESTORE, Loop Follower_ADDRESS will be reset to pin-detected value.
7:6	Reserved	RW	NVM	Not used and set to 00b.
5	INTERLEAVE	RW	NVM	0b: At power-up or RESTORE, INTERLEAVE will be reset to NVM value. 1b: At power-up or RESTORE, INTERLEAVE will be reset to pin-detected value.
4	Reserved	RW	NVM	Not used and set to 0b or 1b.
3	TON_RISE	RW	NVM	0b: At power-up or RESTORE, TON_RISE will be reset to NVM value. 1b: At power-up or RESTORE, TON_RISE will be reset to pin-detected value.
2	IOUT_OC	RW	NVM	0b: At power-up or RESTORE, IOUT_OC_FAULT_LIMIT and IOUT_OC_WARN_LIMIT will be reset to NVM value. 1b: At power-up or RESTORE, IOUT_OC_FAULT_LIMIT and IOUT_OC_WARN_LIMIT will be reset to pin-detected value.
1	FREQ	RW	NVM	0b: At power-up or RESTORE, FREQUENCY_SWITCH will be reset to NVM value. 1b: At power-up or RESTORE, FREQUENCY_SWITCH will be reset to pin-detected value.

Copyright © 2024 Texas Instruments Incorporated

Table 7-83. Register Field Descriptions (continued)

Bit	Field	Access	Reset	Description
0	VOUT	RW	NVM	0b: At power-up or RESTORE, VOUT_COMMAND, VOUT_SCALE_LOOP, VOUT_MAX, and VOUT_MIN will be reset to NVM value. 1b: At power-up or RESTORE, VOUT_COMMAND, VOUT_SCALE_LOOP, VOUT_MAX, and VOUT_MIN will be reset to pin-detected value.

PIN_DETECT_OVERRIDE allows the user to force Pin Detected values to override the User Store NVM value for various PMBus commands during Power On Reset and RESTORE_USER_ALL.

Copyright © 2024 Texas Instruments Incorporated

7.85 (EFh) MFR_SPECIFIC_31 (DEVICE_ADDRESS)

CMD Address	EFh
Write Transaction:	Write Byte
Read Transaction:	Read Byte
Format:	Unsigned Binary (1 bytes)
Phased:	No
NVM Backup:	EEPROM or Pin Detect
Updates:	on-the-fly

The DEVICE_ADDRESS command can be used to program or read-back the device address of digital communication. Note, when a Loop Follower address is updated, the TPSM8S6B24S starts responding to the new address immediately.

Figure 7-84. (EFh) MFR_SPECIFIC_31 (Loop Follower_ADDRESS) Register Map

7	6	5	4	3	2	1	0
R	RW	RW	RW	RW	RW	RW	RW
0	ADDR_PMBUS						

LEGEND: R/W = Read/Write; R = Read only

Table 7-84. Register Field Descriptions

Bit	Field	Access	Reset	Description
7	Not supported	R	0b	Not supported. Set to b'0.
6:0	ADDR_ PMBUS	RW	NVM/ Pinstrap	PMBus Loop Follower address

There are a number of Loop Follower address values which are reserved in the SMBus specification. The following reserved addresses are invalid and can not be programmed:

- 0x0C
- 0x28
- 0x37
- 0x61

Copyright © 2024 Texas Instruments Incorporated

7.86 (F0h) MFR_SPECIFIC_32 (NVM_CHECKSUM)

CMD Address	F0h
Write Transaction:	NA
Read Transaction:	Read Word
Format:	Unsigned Binary (2 bytes)
Phased:	No
NVM Back-up:	EEPROM
Updates:	At boot-up, and following NVM Store/Restore operations.

NVM_CHECKSUM reports the CRC-16 (polynomial 0x8005) checksum for the current NVM settings.

Figure 7-85. (F0h) MFR_SPECIFIC_32 (NVM_CHECKSUM) Register Map

15	14	13	12	11	10	9	8
R	R	R	R	R	R	R	R
NVM_CHECKSUM							
7	6	5	4	3	2	1	0
R	R	R	R	R	R	R	R
NVM_CHECKSUM							

LEGEND: R/W = Read/Write; R = Read only

Table 7-85. Register Field Descriptions

Bit	Field	Access	Reset	Description
15:0	NVM_CHECKSUM	R	Per NVM Settings	CRC16 for EEPROM settings.

Copyright © 2024 Texas Instruments Incorporated

7.87 (F1h) MFR_SPECIFIC_33 (SIMULATE_FAULT)

CMD Address	F1h
Write Transaction:	Write Word
Read Transaction:	Read Word
Format:	Unsigned Binary (2 bytes)
Phased:	Yes
NVM Back-up:	No

SIMULATE_FAULT will allow the user to simulate fault and warning conditions by triggering the output of the detection circuit for that controls it. Multiple faults and or can be simulated at once.

Figure 7-86. (F1h) MFR_SPECIFIC_F1 (SIMULATE_FAULT) Register Map

15	14	13	12	11	10	9	8
W/R	W/R	W/R	W/R	W/R	W/R	W/R	W/R
FAULT_PERSIST	SIM_TEMP_OTF	Reserved	SIM_IOUT_OCF	SIM_VIN_OFF	SIM_VIN_OVF	SIM_VOUT_UVF	SIM_VOUT_OVF
7	6	5	4	3	2	1	0
W/R	W/R	W/R	W/R	W/R	W/R	W/R	W/R
WARN_PERSIST	Reserved	Reserved	SIM_IOUT_OCW	SIM_VIN_UVW	Reserved	SIM_VOUT_UVW	SIM_VOUT_OVW

LEGEND: R/W = Read/Write; R = Read only

Table 7-86. Register Field Descriptions

Bit	Field	Access	Reset	Description
15	FAULT_PERSIST	W/R	0b	0b: Simulated faults are automatically removed after one fault response. 1b: Simulated faults persist until SIMULATE_FAULTS is written again.
14	SIM_TEMP_OTF	W/R	0b	0b: No change 1b: Simulate overtemperature fault
13	Reserved	W/R	0b	0b: No change 1b: Not used
12	SIM_IOUT_OCF	W/R	0b	0b: No change 1b: Simulate output current overcurrent fault.
11	SIM_VIN_OFF*	W/R	0b	0b: No change 1b: Simulate PVIN undervoltage lockout.
10	SIM_VIN_OVF	W/R	0b	0b: No change 1b: Simulate PVIN overvoltage fault.
9	SIM_VOUT_UVF	W/R	0b	0b: No change 1b: Simulate VOUT undervoltage fault.
8	SIM_VOUT_OVF*	W/R	0b	0b: No change 1b: Simulate VOUT overvoltage fault.
7	WARN_PERSIST	W/R	Default Settings	0b: Simulated warnings are automatically removed after one Fault response. 1b: Simulated warnings persist until SIMULATE_FAULTS is written again.
6	Reserved	W/R	Default Settings	0b: No change 1b: Not used
5	Reserved	W/R	Default Settings	0b: No change 1b: Not used
4	SIM_IOUT_OCW	W/R	Default Settings	0b: No change 1b: Simulate output current overcurrent warning.
3	SIM_VIN_UVW	W/R	Default Settings	0b: No change 1b: Simulate PVIN undervoltage warning.
2	Reserved	W/R	Default Settings	0b: No change 1b: Not used

Copyright © 2024 Texas Instruments Incorporated

Table 7-86. Register Field Descriptions (continued)

Bit	Field	Access	Reset	Description
1	SIM_VOUT_UVW	W/R	Default Settings	0b: No change 1b: Simulate VOUT undervoltage warning.
0	SIM_VOUT_OVW	W/R	Default Settings	0b: No change, 1b: Simulate VOUT overvoltage warning.

*Only SIM_VIN_OFF and SIM_VOUT_OVF are allowed to trigger their analog comparator while conversion is disabled. All other faults, including SIM_TEMP_OTF and SIM_VIN_OVF will only simulate while conversion is enabled to allow these faults to simulate repeated shut-down and restart responses when FAULT_PERSIST is selected.

Copyright © 2024 Texas Instruments Incorporated

7.88 (FAh) MFR_SPECIFIC_42 (PASSKEY)

CMD Address	FAh
Write Transaction:	Write Word
Read Transaction:	Read Word
Format:	Unsigned Binary (2 bytes)
Phased:	No
NVM Back-up:	EEPROM
Updates:	At Boot-up

PASSKEY sets a User Programmable 16-bit passkey to disable write access to EXT_WRITE_PROTECT and User Store Non-Volatile Memory (NVM). When PASSKEY is set to 0000h, access to STORE_USER_ALL is enabled and writes to PASSKEY will update the active register value for PASSKEY. When PASSKEY is set to a value other than 0000h during boot-up, write access to EXT_WRITE_PROTECT and STORE_USER_ALL is disabled until the 16-bit word stored in NVM at boot-up is written to PASSKEY.

If 3 writes to PASSKEY are received that do not match the passkey without receiving a write that does match the passkey, PASSKEY access will be locked and all future writes to PASSKEY will be treated as invalid until the device receives a Power On Reset

To protect against unauthorized access to PASSKEY, reading PASSKEY will not respond with the passkey value but a fixed 16-bit word response based on the state of the PASSKEY

1. 0000h - PASSKEY is Unlocked
2. 000Fh - PASSKEY is Locked and no invalid writes have been made
3. 001Fh - PASSKEY is Locked and one invalid write has been made
4. 002Fh - PASSKEY is Locked and two invalid writes have been made
5. 00FFh - PASSKEY is Locked and three or more invalid writes have been made

Figure 7-87. (FAh) MFR_SPECIFIC_42 (NVM_LOCK) Register Map

15	14	13	12	11	10	9	8
RW	RW	RW	RW	RW	RW	RW	RW
PASSKEY							
7	6	5	4	3	2	1	0
RW	RW	RW	RW	RW	RW	RW	RW
PASSKEY							

LEGEND: R/W = Read/Write; R = Read only

Table 7-87. Register Field Descriptions

Bit	Field	Access	Reset	Description
15:0	PASSKEY	RW	NVM	Write: PASSKEY passkey Read: • 0000h - PASSKEY is Unlocked • 000Fh - PASSKEY is Locked and no invalid writes have been made • 001Fh - PASSKEY is Locked and one invalid write has been made • 002Fh - PASSKEY is Locked and two invalid writes have been made • 00FFh - PASSKEY is Locked and three or more invalid writes have been made

Copyright © 2024 Texas Instruments Incorporated

7.89 (FBh) MFR_SPECIFIC_43 (EXT_WRITE_PROTECT)

CMD Address	FBh
Write Transaction:	Write Word
Read Transaction:	Read Word
Format:	Unsigned Binary (2 bytes)
Phased:	No
NVM Back-up:	EEPROM
Updates:	At Boot-up

EXT_WRITE_PROTECT provides the user with greater resolution to Write Protect features than the Standard PMBus Function. Each bit in the EXT_WRITE_PROTECT provides individual and independent WRITE_PROTECTION.

Figure 7-88. (FBh) MFR_SPECIFIC_43(EXT_WRITE_PROTECT) Register Map

15	14	13	12	11	10	9	8
RW	RW	RW	RW	RW	RW	RW	RW
HWP	WP	TRIM	VOUT	VOF	WIN	ITF	MAR
7	6	5	4	3	2	1	0
RW	RW	RW	RW	RW	RW	RW	RW
OP	CFG	VIN	SEQ	DAT	BOT	PSK	STR

LEGEND: R/W = Read/Write; R = Read only

Table 7-88. Register Field Descriptions

Bit	Field	Access	Reset	Description
15	HWP	RW	NVM	Command List: EXT_WRITE_PROTECT (This command), PASSKEY 0b: Commands are Writable unless: a. EXT_WRITE_PROTECT is Write Protected by PASSKEY b. PASSKEY is Write Protected by EXT_WRITE_PROTECT[1] 1b: Commands are Read Only (if stored to NVM, this will permanently lock EXT_WRITE_PROTECT)
14	WP	RW	NVM	Command List: WRITE_PROTECT (Standard PMBus Command) 0b: Commands are Writable (No other command controls write access to WRITE_PROTECT 1b: Commands are Read Only
13	TRIM	RW	NVM	Command List: VOUT_TRIM, VOUT_SCALE_LOOP, IOUT_CAL_GAIN, IOUT_CAL_OFFSET 0b: Commands are Writable unless Write Protected by WRITE_PROTECT 1b: Commands are Read Only
12	VOUT	RW	NVM	Command List: VOUT_MODE, VOUT_COMMAND 0b: Commands are Writable unless Write Protected by WRITE_PROTECT 1b: Commands are Read Only
11	VOF	RW	NVM	Command List: VOUT_MAX, VOUT_OV_FAULT_LIMIT, VOUT_OV_FAULT_RESPONSE, VOUT_UV_FAULT_LIMIT, VOUT_UV_FAULT_RESPONSE, VOUT_MIN 0b: Commands are Writable unless Write Protected by WRITE_PROTECT 1b: Commands are Read Only

Copyright © 2024 Texas Instruments Incorporated

Table 7-88. Register Field Descriptions (continued)

Bit	Field	Access	Reset	Description
10	WN	RW	NVM	Command List: VOUT_OV_WARN_LIMIT, VOUT_UV_WARN_LIMIT, IOUT_OC_WARN_LIMIT, OT_WARN_LIMIT, SMBALERT_MASK 0b: Commands are Writable unless Write Protected by WRITE_PROTECT 1b: Commands are Read Only
9	ITF	RW	NVM	Command List: IOUT_OC_FAULT_LIMIT, IOUT_OC_FAULT_RESPONSE, OT_FAULT_LIMIT, OT_FAULT_RESPONSE, SIMULATE_FAULTS 0b: Commands are Writable unless Write Protected by WRITE_PROTECT 1b: Commands are Read Only
8	MAR	RW	NVM	Command List: VOUT_MARGIN_HIGH, VOUT_MARGIN_LOW, VOUT_TRANSITION_RATE 0b: Commands are Writable unless Write Protected by WRITE_PROTECT 1b: Commands are Read Only
7	OP	RW	NVM	Command List: OPERATION 0b: Commands are Writable unless Write Protected by WRITE_PROTECT 1b: Commands are Read Only
6	CFG	RW	NVM	Command List: FREQUENCY_SWITCH, INTERLEAVE, COMPENSATION_CONFIG, TRANSIENT_REDUCTION_CONFIG, TELEMETRY_CONFIG, POWER_STAGE_CONFIG, PGOOD_CONFIG, SYNC_CONFIG, MISC_OPTIONS, STACK_CONFIG 0b: Commands are Writable unless Write Protected by WRITE_PROTECT 1b: Commands are Read Only
5	VIN	RW	NVM	Command List: VIN_UV_WARN_LIMIT, VIN_OV_FAULT_LIMIT, VIN_OV_WARN_LIMIT, VIN_OV_FAULT_RESPONSE 0b: Commands are Writable unless Write Protected by WRITE_PROTECT 1b: Commands are Read Only
4	SEQ	RW	NVM	Command List: TON_DELAY, TON_RISE, TON_MAX_FAULT_LIMIT, TON_MAX_FAULT_RESPONSE, TOFF_DELAY, TOFF_FALL, and ON_OFF_CONFIG, VIN_ON, VIN_OFF 0b: Commands are Writable unless Write Protected by WRITE_PROTECT 1b: Commands are Read Only
3	DAT	RW	NVM	Command List: MFR_ID, MFR_MODEL, MFE_REVISION, MFR_SERIAL 0b: Commands are Writable unless Write Protected by WRITE_PROTECT 1b: Commands are Read Only
2	BOT	RW	NVM	Command List: PIN_DETECT_OVERRIDE, PMBUS_ADDRESS 0b: Command are Writable unless Read Only from WRITE_PROTECT 1b: Commands are Read Only
1	PSK	RW	NVM	Command List: PASSKEY 0b: Commands are Writable unless Write Protected by WRITE_PROTECT 1b: Commands are Read Only **Note** Because PASSKEY write protects EXT_WRITE_PROTECT when PASSKEY != 0000h, setting this bit when PASSKEY != 0000h and storing to NVM permanently locks access to EXT_WRITE_PROTECT. Setting this bit when PASSKEY is set to 0000h prevents the programming of a PASSKEY value.

Copyright © 2024 Texas Instruments Incorporated

Table 7-88. Register Field Descriptions (continued)

Bit	Field	Access	Reset	Description
0	STR	RW	NVM	Command List: STORE_USER_ALL 0b @ Power On Reset: Commands are Writable unless Read Only from WRITE_PROTECT or PASSKEY 0b @ RESTORE: Commands are Writable unless Read Only from WRITE_PROTECT or PASSKEY 0b at All other Times: Commands are Writable unless Read Only from WRITE_PROTECT or PASSKEY 1b @ Power On Reset: Commands are Read Only 1b @ RESTORE: Commands are Read Only

Copyright © 2024 Texas Instruments Incorporated

7.90 (FCh) MFR_SPECIFIC_44 (FUSION_ID0)

CMD Address	FCh
Write Transaction:	Write Word (writes accepted but otherwise ignored)
Read Transaction:	Read Word
Format:	Unsigned Binary (2 bytes)
Phased:	No
NVM Back-up:	No

FUSION_ID0 provides a platform level Identification code to be used by Texas Instruments Digital Power Designer for identifying a TI device.

Writes to this command will be accepted, but ignored otherwise (the readback value of this command does not change following a write attempt). This command is writeable for some TI devices, so to maintain cross-compatibility, the TPSM8S6B24S accepts write transactions to this command as well. No STATUS_CML bits are set as a result of the receipt of a write attempt to this command.

Figure 7-89. (FCh) MFR_SPECIFIC_44 (FUSION_ID0) Register Map

15	14	13	12	11	10	9	8
R	R	R	R	R	R	R	R
FUSION_ID0							
7	6	5	4	3	2	1	0
R	R	R	R	R	R	R	R
FUSION_ID0							

LEGEND: R/W = Read/Write; R = Read only

Table 7-89. Register Field Descriptions

Bit	Field	Access	Reset	Description
15:0	FUSION_ID0	R	02C0h	Hard Coded to 02C0h

Copyright © 2024 Texas Instruments Incorporated

7.91 (FDh) MFR_SPECIFIC_45 (FUSION_ID1)

CMD Address	FDh
Write Transaction:	Block Write (writes accepted but otherwise ignored)
Read Transaction:	Block Read
Format:	Unsigned Binary (6 bytes)
Phased:	No
NVM Back-up:	No

FUSION_ID1 provides a platform level Identification code to be used by Texas Instruments Digital Power Designer for identifying a TI device.

Writes to this command will be accepted, but ignored otherwise (the readback value of this command does not change following a write attempt). This command is writeable for some TI devices, so to maintain cross-compatibility, the TPSM8S6B24S accepts write transactions to this command as well. No STATUS_CML bits are set as a result of the receipt of a write attempt to this command.

Figure 7-90. (FDh) MFR_SPECIFIC_45 (FUSION_ID1) Register Map

47	46	45	44	43	42	41	40
R	R	R	R	R	R	R	R
FUSION_ID1							
39	38	37	36	35	34	33	32
R	R	R	R	R	R	R	R
FUSION_ID1							
31	30	29	28	27	26	25	24
FUSION_ID1							
23	22	21	20	19	18	17	16
R	R	R	R	R	R	R	R
FUSION_ID1							
15	14	13	12	11	10	9	8
R	R	R	R	R	R	R	R
FUSION_ID1							
7	6	5	4	3	2	1	0
R	R	R	R	R	R	R	R
FUSION_ID1							

LEGEND: R/W = Read/Write; R = Read only

Table 7-90. Register Field Descriptions

Bit	Field	Access	Reset	Description
47:40	FUSION_ID1	R	4Bh	Hard coded to 4Bh
39:32	FUSION_ID1	R	43h	Hard coded to 43h
31:24	FUSION_ID1	R	4Fh	Hard coded to 4Fh
23:16	FUSION_ID1	R	4Ch	Hard coded to 4Ch
15:8	FUSION_ID1	R	49h	Hard coded to 49h

Copyright © 2024 Texas Instruments Incorporated

Table 7-90. Register Field Descriptions (continued)

Bit	Field	Access	Reset	Description
7:0	FUSION_ ID1	R	54h	Hard coded to 54h

Copyright © 2024 Texas Instruments Incorporated

8 Application and Implementation

Note

Information in the following applications sections is not part of the TI component specification, and TI does not warrant its accuracy or completeness. TI's customers are responsible for determining suitability of components for their purposes, as well as validating and testing their design implementation to confirm system functionality.

8.1 Application Information

The TPSM8S6B24S is a highly integrated, single, synchronous step-down DC/DC module. This device is used to convert a higher DC-input voltage to a lower DC-output voltage, with a maximum output current of 25A. Use the following design procedures to select key component values for single phase through two phase design. The appropriate behavioral options can be set through PMBus.

8.2 Typical Application

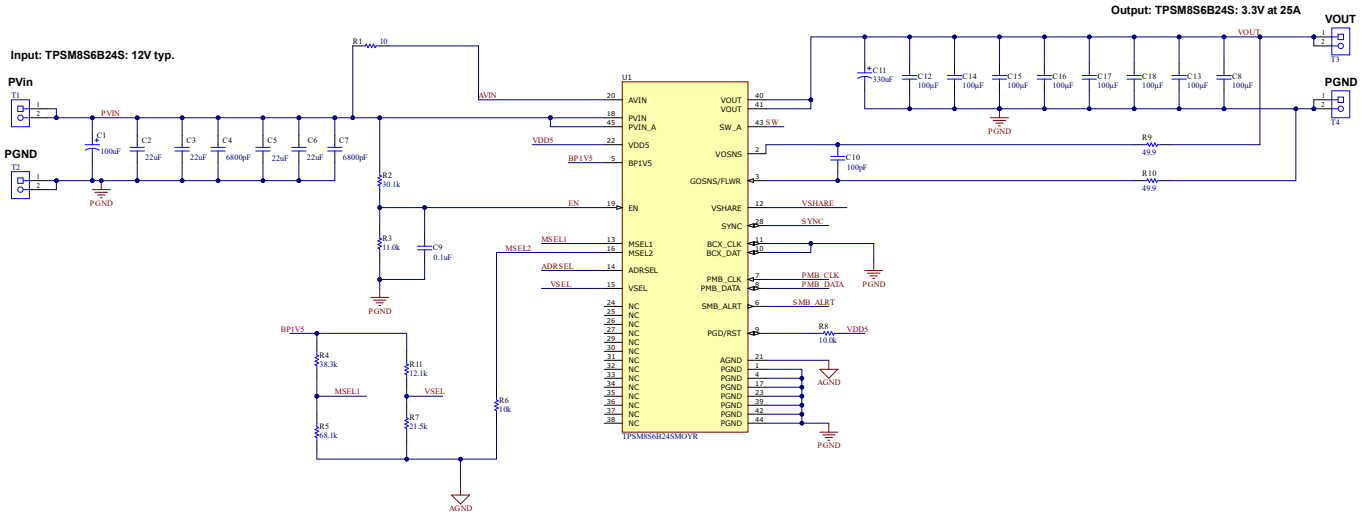

8.2.1 Design Requirements

For this design example, use the input parameters listed in Table 8-1.

Table 8-1. Design Parameters

DESIGN PARAMETER		TEST CONDITIONS	MIN	TYP	MAX	UNIT
V_{IN}	Input voltage		5	12	16	V
$V_{IN(ripple)}$	Input ripple voltage	V_{IN} =12V, I_{OUT} = 25A		0.27		V
V_{OUT}	Output voltage			3.32		V
$\Delta V_{O(\Delta VI)}$	Line regulation	5V ≤ V_{IN} ≤ 16V			0.5%	
$\Delta V_{O(\Delta IO)}$	Load regulation	0V ≤ I_{OUT} ≤ 25A			0.5%	
V_{PP}	Output ripple voltage	I_{OUT} = 25A		10		mV
ΔV_{OUT}	V_{OUT} deviation during load transient	ΔI_{OUT} = 12.5A, V_{IN} = 12V		67		mV
I_{OUT}	Output current	5V ≤ V_{IN} ≤ 16V	0		25	A
I_{OCP}	Output overcurrent protection threshold			39		A
F_{SW}	Switching frequency	V_{IN} = 12V		650		kHz
$\eta_{Full\ load}$	Full load efficiency	V_{IN} = 12V, I_{OUT} = 25A		93.22		
t_{SS}	Soft-start time (T_{ON_RISE})			3		ms

8.2.2 Detailed Design Procedure

The TPSM8S6B24S provides four pins to program critical PMBus register values without requiring PMBus communication prior to first power up. Please refer to Table 6-7 for the pinstrapping options. Some equations include a variable N, which is the number of channels stacked together. In this standalone device example, the value of N is equal to 1.

8.2.2.1 Custom Design With WEBENCH® Tools

Click here to create a custom design using the TPSM8S6B24S device with the WEBENCH® Power Designer.

1. Start by entering the input voltage (V_{IN}), output voltage (V_{OUT}), and output current (I_{OUT}) requirements.
2. Optimize the design for key parameters such as efficiency, footprint, and cost using the optimizer dial.
3. Compare the generated design with other possible solutions from Texas Instruments.

The WEBENCH Power Designer provides a customized schematic along with a list of materials with real-time pricing and component availability.

In most cases, these actions are available:

- Run electrical simulations to see important waveforms and circuit performance
- Run thermal simulations to understand board thermal performance
- Export customized schematic and layout into popular CAD formats
- Print PDF reports for the design, and share the design with colleagues

Get more information about WEBENCH tools at www.ti.com/WEBENCH.

8.2.2.2 Switching Frequency

The MSEL1 pin programs *USER_DATA_01 (COMPENSATION_CONFIG)* and *FREQUENCY_SWITCH*. The resistor divider ratio for MSEL1 selects the nominal switching frequency. In the design procedure for MSEL1, switching frequency is configured first, then compensation is chosen after output capacitance is determined.

There is a tradeoff between higher and lower switching frequencies for buck converters. Higher switching frequencies can produce smaller design size using lower valued inductors and smaller output capacitors compared to a power supply that switches at a lower frequency. However, the higher switching frequency causes extra switching losses, which decrease efficiency and impact thermal performance.

Copyright © 2024 Texas Instruments Incorporated

In this design, a moderate switching frequency of 650kHz achieves both a small design size and a high-efficiency operation. Use the MSEL1 pin program table to select the frequency option. See Table 6-8 for resistor divider code selection. Resistor divider code 9 is needed to set the switching frequency to 650kHz.

8.2.2.3 Output Voltage Setting (VSEL Pin)

The output voltage can be set using the VSEL pin. The resistor divider ratio for VSEL programs the *VOUT_COMMAND* range, *VOUT_SCALE_LOOP* divider, *VOUT_MIN*, and *VOUT_MAX* levels according to Table 6-12. Select the resistor divider code for the range of VOUT desired. For this 3.32V output example, two resistors to AGND and BP1V5 on VSEL pin can be used.

With the resistor divider code selected for the range of VOUT, select the resistor to AGND code with the VOUT_COMMAND offset and VOUT_COMMAND step from Table 6-13. To calculate the resistor to AGND code subtract the VOUT_COMMAND offset from the target output voltage and divide by the VOUT_COMMAND step. For this example, two resistors to AGND and BP1V5 were used and the result is R2G code 8 and RDIV code 9 per design tool. A 21.5kΩ resistor to AGND and a 12. kΩ resistor to BP1V5 at VSEL programs the desired setting.

$$\text{Code} = \frac{V_{OUT} - \text{VOUT_COMMAND}_{Offset}}{\text{VOUT_COMMAND}_{STEP}} = \frac{3.32 - 3.0}{0.040} = 8 \quad (9)$$

8.2.2.4 Compensation Selection (MSEL1 Pin)

The resistor to AGND for MSEL1 selects the *(B1h) USER_DATA_01 (COMPENSATION_CONFIG)* values to program the following voltage loop and current loop gains. For options other than the EEPROM code (MSEL1 shorted to AGND or MSEL1 to AGND resistor code 0), the current and voltage loop zero and pole frequencies are scaled with the programmed switching frequency.

Based on the design tool, for a switching frequency of 650kHz, the TPSM8S6B24S must use an I_{LOOP} of 7 and a maximum voltage loop bandwidth of 29kHz (from design tool).

For this design, V_{LOOP} = 8 is selected.

For I_{LOOP} = 7, V_{LOOP} = 8, Compensation Code 30 is selected and MSEL1 is terminated with resistor divider code 9 and resistor to ground code 14, selecting a top 38.3kΩ resistor and bottom 68.1kΩ resistor

Note

More conservative Current and Voltage Loops can be selected by selecting a lower I_{LOOP} gain and reducing the maximum voltage loop bandwidth proportionally.

8.2.2.5 Output Capacitor Selection

Output capacitors are selected to meet the output ripple requirements and stabilize the votlage loop below $V_{BW(max)}$.

To stabilize the loop below $V_{BW(max)}$, evaluate the output impedance of available electrolytic and ceramic capacitors at the target voltage loop bandwidth frequency and combine capacitors in parallel to reduce the total output impedance of the capacitor bank below.

$$Z_{OUT}(V_{BW}) < \frac{CSA}{N \times V_{LOOP} \times \text{VOUT_SCALE_LOOP}} \quad (10)$$

$$Z_{OUT}(V_{BW}) < \frac{6.155\ \text{mV/A}}{1 \times 8 \times 0.125} = 6.155\ \text{m}\Omega \quad (11)$$

$$Z_{C_100\mu F} = \frac{1}{2\pi f_{SW} C} = \frac{1}{2\pi \times 29\ \text{kHz} \times 9\text{x}100\ \mu\text{F}} = 6.1\ \text{m}\Omega \quad (12)$$

$$Z_{C_330\mu F} = \frac{1}{2\pi f_{SW} C} = \frac{1}{2\pi \times 29\ \text{kHz} \times 2\text{x}330\ \mu\text{F}} = 8.32\ \text{m}\Omega \quad (13)$$

Copyright © 2024 Texas Instruments Incorporated

8.2.2.5.1 Output Voltage Ripple

The output-voltage ripple is the second criterion for output capacitor selection. Use Equation 14 to calculate the minimum output capacitance required to meet the output-voltage ripple specification.

$$C_{OUT(min)} = \frac{I_{RIPPLE}}{8 \times f_{sw} \times V_{OUT(RIPPLE)}} = \frac{8.57\ A}{8 \times 650\ kHz \times 10\ mV} = 165\mu F \quad (14)$$

In this case, the target maximum output-voltage ripple is 10mV. Under this requirement, the minimum output capacitance for ripple is 165µF. This capacitance value is smaller than the output capacitance required for the transient response, so select the output capacitance value based on the transient requirement. Considering the variation and derating of capacitance, in this design, 2 × 330µF low-ESR tantalum polymer bulk capacitors and 9 × 100µF ceramic capacitors were selected to meet the transient specification with sufficient margin. Therefore the selected nominal C_{OUT} is equal to 1560µF.

With the output capacitance value selected, the ESR must be considered. This consideration is important in this example because this consideration uses mixed output capacitor types. First use Equation 15 to calculate the maximum allowable impedance for the output capacitor bank at the switching frequency to meet the output voltage ripple specification. Equation 15 indicates the output capacitor bank impedance must be less than 1.3mΩ. The impedance of the ceramic capacitors is calculated with Equation 16 and the impedance of the bulk capacitor is calculated with Equation 17. The result from Equation 17 shows the impedance of the bulk capacitor at the switching frequency is dominated by the ESR. Equation 18 calculates the total output impedance of the output capacitor bank at the switching frequency to be 0.25mΩ which meets the 1.3mΩ requirement.

$$Z_{OUT(MAX)_f_{SW}} = \frac{V_{OUT\ (RIPPLE)}}{I_{RIPPLE}} = \frac{10\ mV}{8.57\ A} = 1.17\ m\Omega \quad (15)$$

$$Z_{CER_f_{sw}} = \frac{1}{2\pi \times f_{sw} \times C_{CER}} = \frac{1}{2\pi \times 650\ kHz \times (9 \times 100\ \mu F)} = 0.27\ m\Omega \quad (16)$$

$$Z_{BULK_f_{sw}} = \sqrt{ESR_{BULK}^2 + \left(\frac{1}{2\pi \times f_{SW} \times C_{BULK}}\right)^2} = \sqrt{\left(\frac{6\ m\Omega}{2}\right)^2 + \left(\frac{1}{2\pi \times 650\ kHz \times (1 \times 2x330\ \mu F)}\right)^2} = 3.02\ m\Omega \quad (17)$$

$$Z_{COUT_f_{sw}} = \frac{Z_{CER_f_{sw}} \times Z_{BULK_f_{sw}}}{Z_{CER_f_{sw}} + Z_{BULK_f_{sw}}} = \frac{0.27\ m\Omega \times 3.02\ m\Omega}{0.27\ m\Omega + 3.02\ m\Omega} = 0.25\ m\Omega \quad (18)$$

8.2.2.6 Input Capacitor Selection

The power-stage input-decoupling capacitance (effective capacitance at the PVIN and PGND pins) must be sufficient to supply the high switching currents demanded when the high-side MOSFET switches on, while providing minimal input-voltage ripple as a result. This effective capacitance includes any DC-bias effects. The voltage rating of the input capacitor must be greater than the maximum input voltage with derating. The capacitor must also have a ripple-current rating greater than the maximum input-current ripple to the device during full load. Use Equation 19 to estimate the input RMS current.

$$I_{IN(RMS)} = \frac{I_{OUT(MAX)}}{N} \times \sqrt{\frac{V_{OUT}}{V_{IN(Min)}} \times \frac{\left(V_{IN(Min)} - V_{OUT}\right)}{V_{IN(Min)}}} = \frac{25\ A}{1} \times \sqrt{\frac{3.3\ V}{5\ V} \times \frac{(5\ V - 3.3\ V)}{5\ V}} = 11.8\ A \quad (19)$$

The minimum input capacitance and ESR values for a given input voltage-ripple specification, $V_{IN(ripple)}$, are shown in Equation 20 and Equation 21. The input ripple is composed of a capacitive portion ($V_{RIPPLE(cap)}$) and a resistive portion ($V_{RIPPLE(esr)}$).

$$C_{IN(Min)} = \frac{\frac{I_{OUT(MAX)}}{N} \times V_{OUT}}{V_{RIPPLE(cap)} \times V_{IN(Max)} \times f_{SW}} = \frac{\frac{25\ A}{1} \times 3.3\ V}{0.1\ V \times 16\ V \times 650\ kHz} = 79.3\ \mu F \quad (20)$$

Copyright © 2024 Texas Instruments Incorporated

$$ESR_{CIN(Max)} = \frac{V_{RIPPLE(ESR)}}{\frac{I_{OUT(Max)}}{N} + \frac{1}{2}I_{RIPPLE}} = \frac{0.2\ V}{\frac{25\ A}{1} + \frac{1}{2} \times 8.57\ A} = 6.83\ m\Omega \quad (21)$$

The value of a ceramic capacitor varies significantly over temperature and the amount of DC bias applied to the capacitor. The capacitance variations because of temperature can be minimized by selecting a dielectric material that is stable over temperature. X5R and X7R ceramic dielectrics are usually selected for power-regulator capacitors because these components have a high capacitance-to-volume ratio and are fairly stable over temperature. The input capacitor must also be selected with consideration of the DC bias. For this example design, a ceramic capacitor with at least a 25V voltage rating is required to support the maximum input voltage. For this design, allow 0.1V input ripple for $V_{RIPPLE(cap)}$ and 0.2V input ripple for $V_{RIPPLE(esr)}$. Using Equation 20 and Equation 21, the minimum input capacitance for this design is 79.3µF, and the maximum ESR is 6.83mΩ. For this design example, four 22µF, 25V ceramic capacitors, two 6800pF, 25V ceramic capacitors, and one additional 100µF, 25V low-ESR electrolytic capacitors in parallel were selected for the power stage with sufficient margin. For all designs, TI requires a minimum input capacitance of 10µF and recommends a maximum input ripple of 500mV.

To minimize the high frequency ringing, place the high frequency 6800pF PVIN bypass capacitors close to the power stage.

8.2.2.7 Soft Start, Overcurrent Protection, and Stacking Configuration (MSEL2 Pin)

Soft-start time, overcurrent protection thresholds, and stacking configuration can be configured using the MSEL2 pin. The TPSM8S6B24S device support several soft-start times from 0 to 31.75ms in 250µs steps (7 bits) selected by the *TON_RISE* command. Eight times are selectable using the MSEL2 pin. The TPSM8S6B24S device support several low-side overcurrent warn and fault thresholds from 8A to 62A selected by the *IOUT_OC_WARN_LIMIT* and *IOUT_OC_FAULT_LIMIT* commands. Four thresholds are selectable using the MSEL2 pin. The response to an OC fault can be changed through PMBus. Lastly, the number of devices stacked is set using the MSEL2 pin.

The resistor divider code for MSEL2 selects the soft-start values. The resistor to AGND determines the number of devices sharing common output and the overcurrent thresholds. Use Table 6-11 and Table 6-10 to select the resistor to AGND code and resistor divider code needed for the desired configuration.

In this single phase design, resistor divider code open is selected for 3ms soft start and resistor to AGND code 4 is selected for the 30/39A current limit thresholds and standalone configuration.

8.2.2.8 Enable and UVLO

The *ON_OFF_CONFIG* command is used to select the turn-on behavior of the converter. For this example, the EN pin or CONTROL pin was used to enable or disable the converter, regardless of the state of *OPERATION*, as long as the input voltage is present and above the UVLO threshold. The EN pin is pulled low internally if it is floating.

A resistor divider can be added the EN pin to program an additional UVLO. Additionally 0.1µF can be placed on this pin to filter noise or short glitches. Use Equation 22 and Equation 23 to calculate the resistor values to target a 3.92V turn-on and a 3.51V turn-off. Standard resistor values of 30.1kΩ and kΩ are selected for this example. Use Equation 24 and Equation 25 to calculate the thresholds based on selected resistor values.

$$R_{ENTOP} = \frac{V_{ON} \times V_{ENFALL} - V_{OFF} \times V_{ENRISE}}{N \times I_{ENHYS} \times V_{ENRISE}} = \frac{3.92\,V \times 0.98\,V - 3.51\,V \times 1.05\,V}{1 \times 5.5\,\mu A \times 1.05\,V} = 27\ k\Omega \quad (22)$$

$$R_{ENBOT} = \frac{V_{ENTOP} \times V_{ENFALL}}{V_{OFF} - V_{ENFALL} + N \times I_{ENHYS} \times R_{ENTOP}} = \frac{30.1\,k\Omega \times 0.98\,V}{3.92\,V - 0.98\,V + 1 \times 5.5\,\mu A \times 30.1\,k\Omega} = 9.5\ k\Omega \quad (23)$$

$$V_{ON} = \frac{V_{ENRISE} \times (R_{ENBOT} + R_{ENTOP})}{R_{ENBOT}} = \frac{1.05\,V \times (11\,k\Omega + 30.1\,k\Omega)}{11\,k\Omega} = 3.92\,V \quad (24)$$

Copyright © 2024 Texas Instruments Incorporated

$$V_{OFF} = \frac{V_{ENFALL} \times (R_{ENBOT} + R_{ENTOP})}{R_{ENBOT}} - N \times I_{ENHYS} \times R_{ENTOP} = \frac{0.98\,V \times (11\,k\Omega + 30.1\,k\Omega)}{11\,k\Omega} - 1 \times 5.5\,\mu A \times 30.1\,k\Omega = 3.5\,V \quad (25)$$

8.2.2.9 ADRSEL

In this example, the ADRSEL pin is left floating. This floating sets the PMBus loop follower address to the EEPROM value, 0x24h (36d) by default, and the SYNC pin to auto detect with 0 degrees phase shift. Use Table 6-14 and Table 6-15 to select the resistor to AGND code and resistor divider code needed for the desired configuration.

If through pinstrapping, the desired address is not possible with the SYNC pin set to auto detect and synchronization is not needed in the application, the SYNC pin must be configured for SYNC_OUT. The device still regulates normally with the SYNC pin configured for SYNC_IN, however, if there is not clock input to the SYNC pin, the device declares a SYNC fault in the *STATUS_MFR_SPECIFIC* command.

8.2.2.10 BCX_CLK and BCX_DAT

For a standalone device, the BCX_CLK and BCX_DAT pins are not used. As shown in Table 6-5, TI recommends grounding them to the thermal pad.

Copyright © 2024 Texas Instruments Incorporated

8.2.3 Application Curves

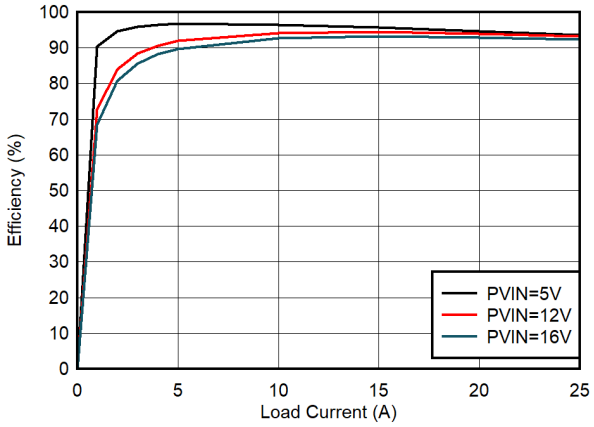

V_{IN} = 12V
V_{OUT} = 3.32V

Figure 8-1. Efficiency vs Output Current

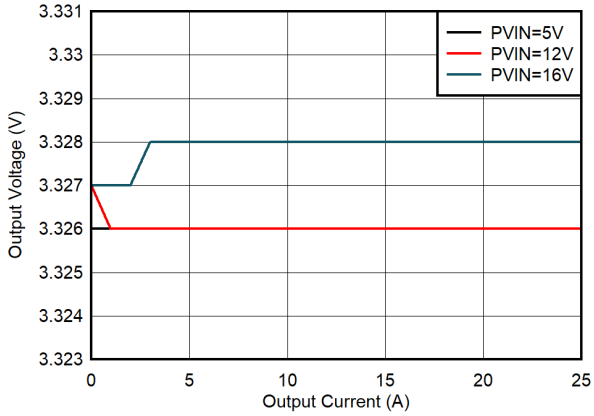

V_{IN} = 12V V_{OUT} = 3.32V

Figure 8-2. Load Regulation

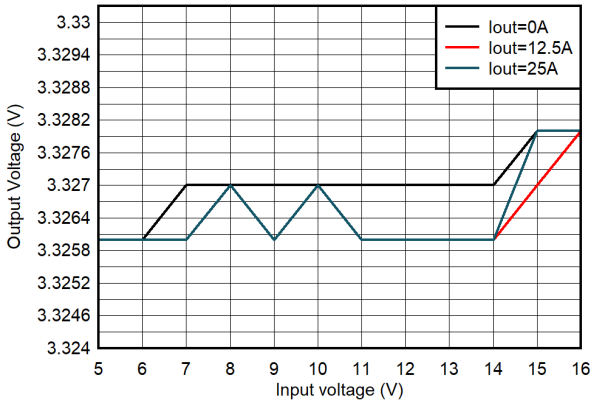

V_{OUT} = 3.32V

Figure 8-3. Line Regulation

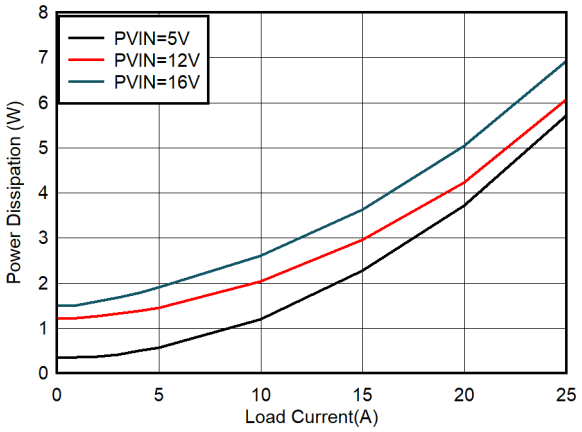

V_{OUT} = 3.32V

Figure 8-4. Power Dissipation

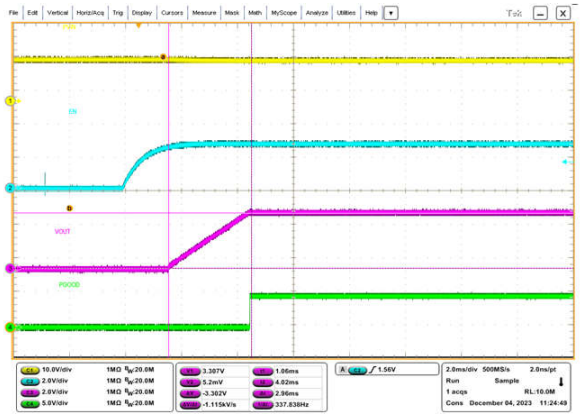

V_{IN} = 12V V_{OUT} = 3.32V I_{OUT} = 25A

Figure 8-5. Start-Up from EN/UVLO

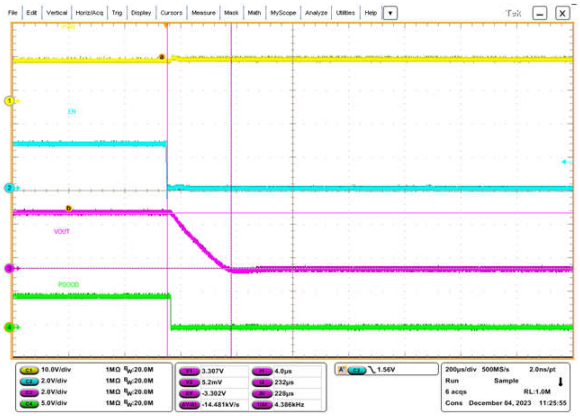

V_{IN} = 12V V_{OUT} = 3.32V I_{OUT} = 25A

Figure 8-6. Shutdown from CNTL

Copyright © 2024 Texas Instruments Incorporated

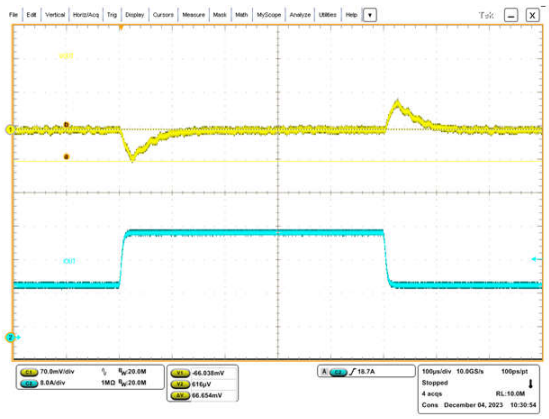

V_{IN} = 12V V_{OUT} = 3.32V I_{OUT} = 12.5A to 25A, 2.5A/µs

Figure 8-7. Load Transient Response

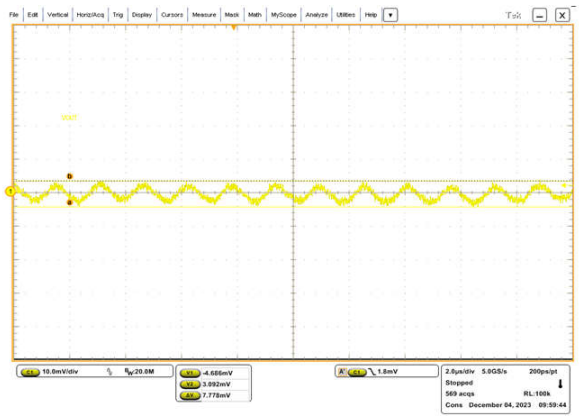

V_{IN} = 12V V_{OUT} = 3.32V I_{OUT} = 25A

Figure 8-8. V_{OUT} Steady-State Ripple

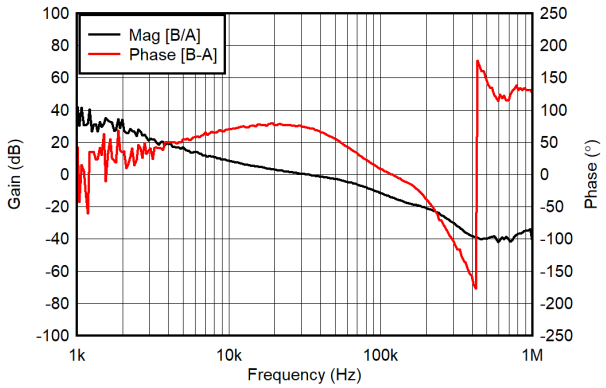

V_{IN} = 12V V_{OUT} = 3.32V I_{OUT} = 25A

Figure 8-9. Total-Loop Bode Plot

Copyright © 2024 Texas Instruments Incorporated

8.3 Two-Phase Application

Use the following design procedure to select key component values for two-phase design. The appropriate behavioral options can be set through PMBus. Refer to Section 8.2.2 for the equations used to calculate the component values in this example. The only difference is to increase value of N to 2 because there are two devices stacked for a two-phase design. This procedure can also be used as reference for three-phase and four-phase designs. Again the only difference is to increase the value of N to 3 and 4 for a three-phase and four-phase design, respectively.

WEBENCH includes support for creating two-phase designs. The *TPSM8S6x24 Compensation and Pin-Strap Resistor Calculator* can also be used to aid in design calculations and pinstrap resistor selection.

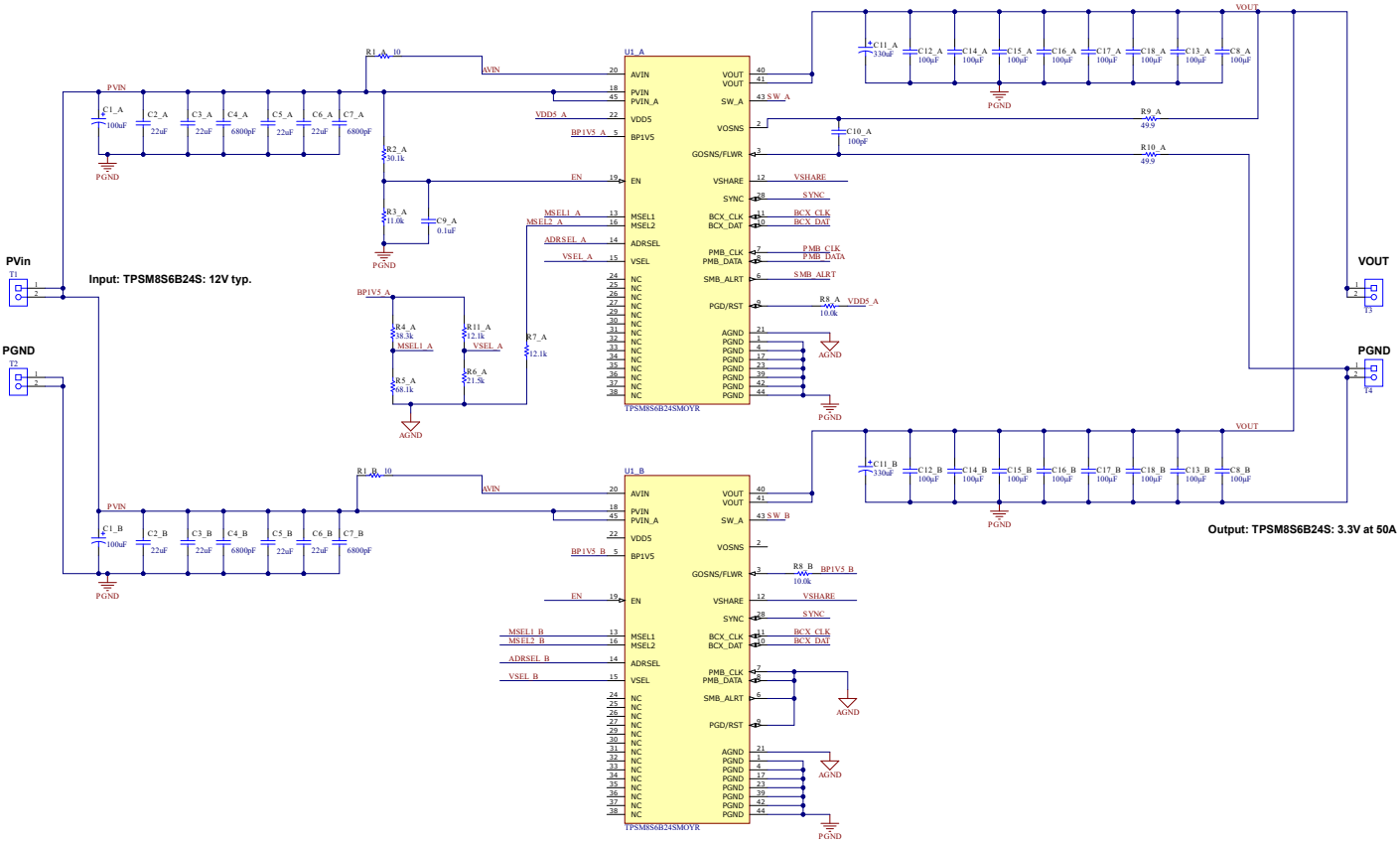

Figure 8-10. TPSM8S6B24S Two-Phase Application

8.3.1 Design Requirements

For this design example, use the input parameters listed in Table 8-1.

Table 8-2. Design Parameters

DESIGN PARAMETER		TEST CONDITIONS	MIN	TYP	MAX	UNIT
V_{IN}	Input voltage		5	12	16	V
$V_{IN(ripple)}$	Input ripple voltage	V_{IN} = 12V, I_{OUT} = 50A		0.3		V
V_{OUT}	Output voltage			3.32		V
$\Delta V_{O(\Delta VI)}$	Line regulation	5V ≤ V_{IN} ≤ 16V			0.5%	
$\Delta V_{O(\Delta IO)}$	Load regulation	0V ≤ I_{OUT} ≤ 50A			0.5%	
V_{PP}	Output ripple voltage	I_{OUT} = 50A		10		mV
ΔV_{OUT}	V_{OUT} deviation during load transient	ΔI_{OUT} = 25A, V_{IN} = 12V		159		mV
I_{OUT}	Output current	5V ≤ V_{IN} ≤ 16V	0		50	A
I_{OCP}	Output overcurrent protection threshold			78		A
F_{SW}	Switching frequency	V_{IN} = 12V		650		kHz
$\eta_{Full\ load}$	Full load efficiency	V_{IN} = 12V, I_{OUT} = 50A		93.13		
t_{SS}	Soft-start time (T_{ON_RISE})			3		ms

8.3.2 Two-Phase Detailed Design Procedure

For the 2-phase application, the design process is similar to that of the single phase, except:

- In selecting the voltage loop compensation, N = 2 divides the effective current sense amplifier gain in half as the two phases operate in parallel, each delivering equal current, doubling the current gain of the converter.
- For ceramic input bypassing capacitors, TI recommends that each phase have sufficient bypassing to support each phase as if the phase was a single-phase output. While there is some channel to channel current sharing, layout and trace inductance often results in actual ripple current sharing being significantly lower than the desired input ripple cancellation.
- MSEL2 of the primary channel (MSEL2_A) is selected for a 2-phase converter with 3ms TON_RISE and the maximum current limit by being left open.
- VSEL and ADRSEL of the primary channel are programed the same as a single phase converter.
- MSEL2 of the follower channel (MSEL2_B) is float to select follower of a 2-phase converter with 30/39A current limit setting.
- GOSNS/FLWR_B is pulled up to BP1V5 to set channel B to a follower, using the Channel A voltage regulation and error amplifier as well as PMBus interface.
- VSHARE_A and VSHARE_B are connected together along with BCX_CLK A and B, and BCX_DAT A and B.
- MSEL1, VSEL, ADRSEL, PGOOD, PMB_CLK, and PMB_DAT on Channel B are all unused, and connected to GND.

Copyright © 2024 Texas Instruments Incorporated

8.3.2.1 Switching Frequency

Only the loop controller device needs a resistor divider at the MSEL1 pin to program *USER_DATA_01 (COMPENSATION_CONFIG)* and *FREQUENCY_SWITCH*. The MSEL1 pin of secondary channels are not used. In this design, a moderate switching frequency of 650kHz achieves both a small design size and a high-efficiency operation. Use the MSEL1 pin program table to select the frequency option. See Table 6-8 for resistor divider code selection. With 650kHz switching frequency, two resistors to AGND and BP1V5 can be used to program compensation settings 30. To program all 32 compensation settings possible through MSEL1, resistor divider code 9 sets the switching frequency to 650kHz.

8.3.2.2 Output Voltage Setting (VSEL Pin)

Only the loop controller device needs a resistor divider at the VSEL pin to program the output voltage. The VSEL pin of loop follower devices are not used. The resistor divider code selected for this 3.32V output example using Table 6-12 is two resistors to AGND and BP1V5. With the resistor divider code selected for the range of VOUT, select the resistor to AGND code with the VOUT_COMMAND Offset and VOUT_COMMAND step from the Table 6-13. With V_{OUT} = 3.32V, $VOUT_COMMAND_{(Offset)}$ = 3V and $VOUT_COMMAND_{(STEP)}$ = 0.04, the result is R2G code 8. A 21.5kΩ resistor to AGND and 12.1kΩ to BP1V5 at VSEL programs the desired setting.

8.3.2.3 Compensation Selection (MSEL1 Pin)

Only the loop controller device uses two resistors to AGND and BP1V5 for MSEL1 to program the *(B1h) USER_DATA_01 (COMPENSATION_CONFIG)* values to set the following voltage loop and current loop gains. The MSEL1 pin of the loop follower devices are not used. For options other than the EEPROM code (MSEL1 shorted to AGND or MSEL1 to AGND resistor code 0), the current and voltage loop zero and pole frequencies are scaled with the programmed switching frequency. See Section 8.2.2.4 for more details.

8.3.2.4 Output Capacitor Selection

The target maximum output-voltage ripple is 10mV. Under this requirement, the minimum output capacitance for ripple is 2 × 165µF. Depending on the duty cycle and the number of phases, there can also be some inductor ripple current cancellation. This inductor ripple current cancellation reduces the amount of ripple current the capacitors must absorb, reducing the output voltage ripple. This capacitance value is smaller than the output capacitance required for the transient response, so select the output capacitance value based on the transient requirement. Considering the variation and derating of capacitance, in this design, 4 × 330µF low-ESR tantalum polymer bulk capacitors and 18 × 100µF ceramic capacitors were selected to meet the transient specification with sufficient margin. The selected nominal C_{OUT} is equal to 3120µF. The 330µF capacitors selected have an ESR of 6mΩ.

With the output capacitance value selected, the ESR must be considered because this example uses mixed output capacitor types. First, use Equation 15 to calculate the maximum allowable impedance for the output capacitor bank at the switching frequency to meet the output voltage ripple specification. Equation 16 indicates the output capacitor bank impedance must be less than 0.27mΩ. The impedance of the ceramic capacitors alone is calculated with Equation 18 to be 0.25mΩ. This amount is much less than the calculated maximum, so the ESR of tantalum polymer capacitors must not be considered for the output ripple specification.

8.3.2.5 Input Capacitor Selection

Using Equation 19, the maximum input RMS current is 11.8A and the input capacitors must be rated to handle this current. When calculating this, the maximum output current must be divided by the number of phases. The output current is divided by the number of phases because the switching nodes are interleaved. Interleaving the switching node effectively divides the amplitude of the current pulses the input capacitor by the number of phases. With the 16V maximum input in this example, a ceramic capacitor with at least a 25V voltage rating is required to support the maximum input voltage.

For this design, allow 0.1V input ripple for $V_{RIPPLE(cap)}$ and 0.2V input ripple for $V_{RIPPLE(esr)}$. Using Equation 20 and Equation 21, the minimum input capacitance for this design is 2 × 79.3µF and the maximum ESR is half of 6.83mΩ, respectively. Again, the maximum output current must be divided by the number of phases and the calculated capacitance must be placed near the loop controller device and all of the loop follower devices. 8 × 22µF, 25V ceramic capacitors and 4 × 6800pF, 25V ceramic capacitors in parallel were selected to bypass the

Copyright © 2024 Texas Instruments Incorporated

power stage with sufficient margin. Additionally, 2 × 100µF, 25V low-ESR electrolytic capacitors were placed on the input to minimize deviations on the input during transients. These capacitors are distributed equally between the phases. To minimize the high frequency ringing, the high frequency 6800pF PVIN bypass capacitors must be placed close to power stage.

When stacking converters the amount of input RMS current and the amount if input capacitance required can be further reduced. The amount of ripple cancellation depends on the number of phases and the duty cycle. PCB inductance between the phases can also reduce the effects of ripple cancellation. The calculations given in this example ignore the effects of ripple cancellation.

8.3.2.6 GOSNS/Loop Follower Pin of Loop Follower Devices

Loop follower devices must have the GOSNS/Loop Follower pin tied to BP1V5 through a resistor. TI recommends a 10kΩ resistor.

8.3.2.7 Soft Start, Overcurrent Protection, and Stacking Configuration (MSEL2 Pin)

The resistor divider code for MSEL2 pin of the loop controller device (U1) selects the soft-start values. The resistor to AGND determines the number of devices sharing common output and the overcurrent thresholds. Use Table 6-10 and Table 6-11 to select the resistor values. In this two-phase design, the desired settings can be selected by floating the MSEL2 pin. This action selects 3ms soft-start time, the highest current limit thresholds and two-phase configuration.

In stackable configuration, follower modules use the resistor from MSEL2 to AGND to program *IOUT_OC_WARN_LIMIT*, *IOUT_OC_FAULT_LIMIT*, *MFR_SPECIFIC_28 (STACK_CONFIG)*, and *INTERLEAVE*. The loop follower receive all other pin programmed values from the loop controller over the back-channel communication (BCX_CLK and BCX_DAT) as part of the power-on reset function. In this two-phase design, the desired settings can be selected by floating the MSEL2 pin of the loop follower device. This action selects the 30/39A current limit thresholds and programs the loop follower device to be the 180° out of phase from the loop controller device.

8.3.2.8 Enable, UVLO

TI recommends connecting the EN pins of stacked devices together. When this connection is done, the hysteresis current is multiplied by the number devices stacked. This increased hysteresis current must be included in calculations for a resistor divider to the EN pins. See Section 8.2.2.8 for more details.

8.3.2.9 VSHARE Pin

When using a stacked configuration, bypass the VSHARE pin of each device to AGND with a 33pF or larger capacitor. This is optional because this capacitor is integarted internally in the module. This capacitor is used to prevent external noise from adding to the VSHARE signal between stacked devices.

8.3.2.9.1 ADRSEL Pin

Only the loop controller device (U1) needs a resistor divider at the ADRSEL pin. In this example, the ADRSEL pin is left floating. This sets the PMBus loop follower address to the EEPROM value, 0x24h (36d) by default, and the SYNC pin to auto detect with 0 degrees phase shift. Use Table 6-14 and Table 6-15 to select the resistor to AGND code and resistor divider code needed for the desired configuration.

8.3.2.10 SYNC Pin

The SYNC pins of stacked devices must be connected together. The follower modules are always configured for SYNC_IN while the primary module (U1) can be configured for auto-detect, SYNC_IN or SYNC_OUT.

8.3.2.11 VOSNS Pin of Loop Follower Devices

The VOSNS pin of loop follower devices can be used to monitor voltages other than VOUT through the *READ_VOUT* command. A resistor divider must be used to scale to voltage at VOSNS to be less than 0.75V. The appropriate phase must be selected using the *PHASE* command.

Copyright © 2024 Texas Instruments Incorporated

8.3.2.12 Unused Pins of Loop Follower Devices

Multiple pins of loop follower devices are not used and TI recommends grounding to the thermal pad. See Table 6-5 for more information.

Copyright © 2024 Texas Instruments Incorporated

8.3.3 Two-Phase Application Curves

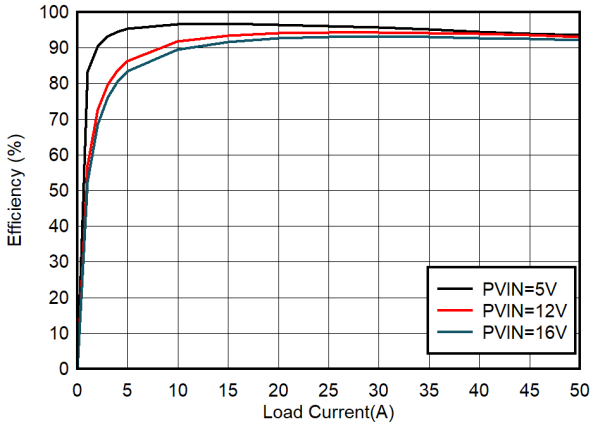

V_{IN} = 12V V_{OUT} = 3.32V

Figure 8-11. Efficiency vs Output Current

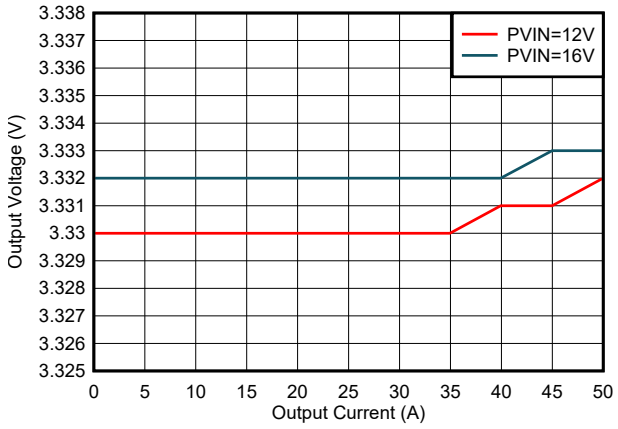

V_{IN} = 12 -16V V_{OUT} = 3.32V

Figure 8-12. Load Regulation

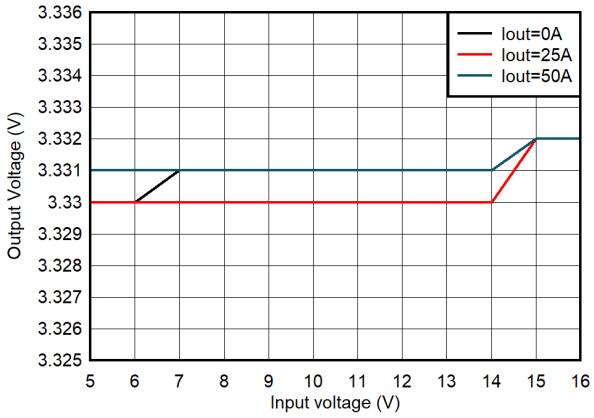

V_{IN} = 5- 16V V_{OUT} = 3.32V

Figure 8-13. Line Regulation

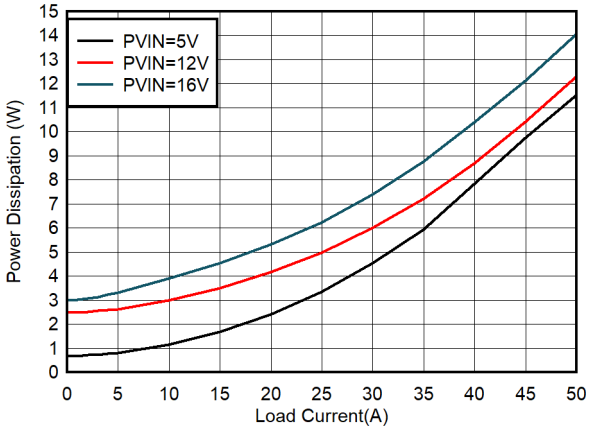

V_{IN} = 12V V_{OUT} = 3.32V

Figure 8-14. Power Dissipation

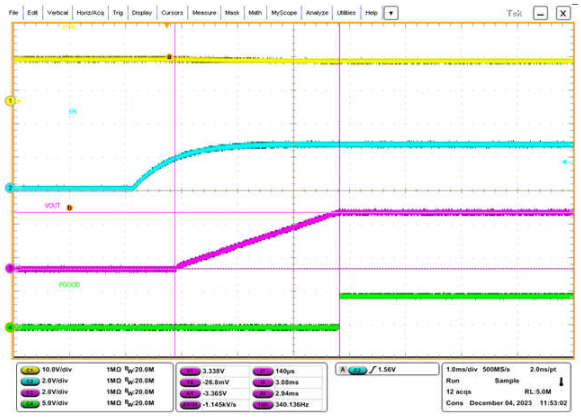

V_{IN} = 12V V_{OUT} = 3.32V I_{OUT} = 50A
f_{SW} = 650kHz

Figure 8-15. Start-Up from EN

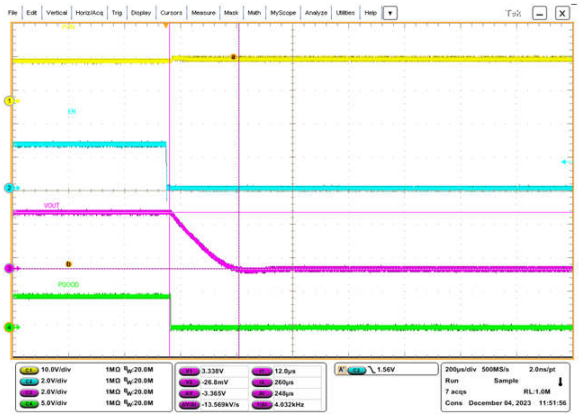

V_{IN} = 12V V_{OUT} = 3.32V I_{OUT} = 50A
f_{SW} = 650kHz

Figure 8-16. Shutdown from EN

Copyright © 2024 Texas Instruments Incorporated

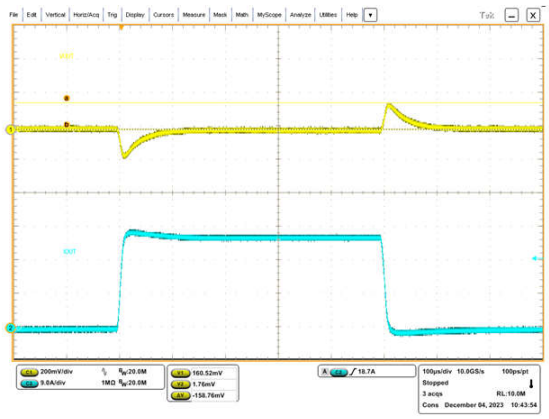

V_{IN} = 12V V_{OUT} = 3.32V I_{OUT} = 0A to 25A, 2.5A/µs

Figure 8-17. Load Transient Response

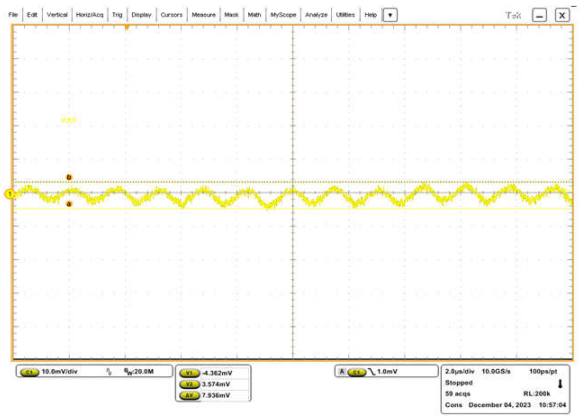

V_{IN} = 12V V_{OUT} = 3.32V I_{OUT} = 50A

Figure 8-18. V_{OUT} Steady-State Ripple

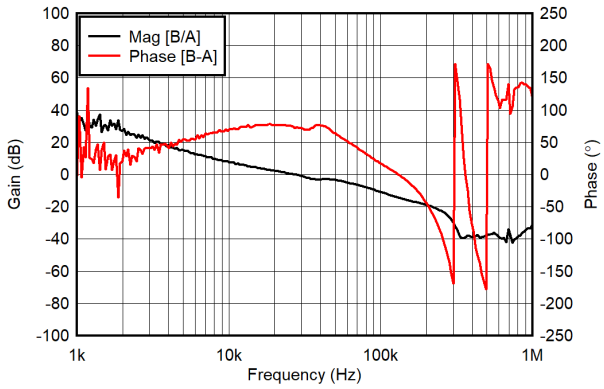

V_{IN} = 12V
f_{SW} = 650kHz

V_{OUT} = 3.32V

I_{OUT} = 50A

Figure 8-19. Total-Loop Bode Plot

8.4 Power Supply Recommendations

The TPSM8S6B24S devices are designed to operate from split input voltage supplies. AVIN is designed to operate from 2.95V to 18V. AVIN must be powered to enable POR, PMBus communication, or output conversion. For AVIN voltages less than 4V, VDD5 must be supplied with an input voltage greater than 4V to enable switching. PVIN is designed to operate from 2.95V to 16V. PVIN must be powered to enable switching, but not for POR or PMBus communication. The can be operated from a single 4V or higher supply voltage by connecting AVIN to PVIN. TI recommends a 10Ω resistor between AVIN and PVIN to reduce switching noise on AVIN. See the recommendations in Section 8.5.

8.5 Layout

8.5.1 Layout Guidelines

Layout is critical for good power-supply design. *Section 8.5.2* shows the recommended PCB-layout configuration. A list of PCB layout considerations using these devices is listed as follows:

- Minimize the loop area formed by power or signal paths and the bypass connections. As with any switching regulator, several power or signal paths exist that conduct fast switching voltages or currents.
- Bypass the PVIN pins to PGND with a low-impedance path. Place the input bypass capacitors of the power-stage as close as physically possible to the PVIN and PGND pins. A high-frequency bypass capacitor is integrated to reduce switching spikes and EMI. Additional EMI bypass capacitor can be placed on the other side of the PCB directly underneath the device to keep a minimum loop.
- Keep signal components local to the device, and place them as close as possible to the pins to which the signal components are connected. These components include the VOSNS and GOSNS series resistors and differential filter capacitor as well as MSEL1, MSEL2, VSEL, and ADRSEL resistors. Those components can be terminated to AGND with a minimum return loop or bypassed to the copper area of a separate low-impedance analog ground (AGND) that is isolated from fast switching voltages and current paths and has single connection to PGND on the thermal pad through the AGND pin. For placement recommendations, see *Section 8.5.2*.
- Connect the PGND pins directly to the thermal pad of the device on the PCB, with a low-noise, low-impedance path.
- Route the VOSNS and GOSNS lines from the output capacitor bank at the load back to the device pins as a tightly coupled differential pair. These traces must be kept away from switching or noisy areas which can add differential-mode noise.
- Use caution when routing of the SYNC, VSHARE, BCX_CLK, and BCX_DAT traces for stackable configurations. The SYNC trace carries a rail-to-rail signal and must be routed away from sensitive analog signals, including the VSHARE, VOSNS, and GOSNS signals. The VSHARE traces must also be kept away from fast switching voltages or currents formed by the PVIN, AVIN, SW, and VDD5 pins.

8.5.2 Layout Example

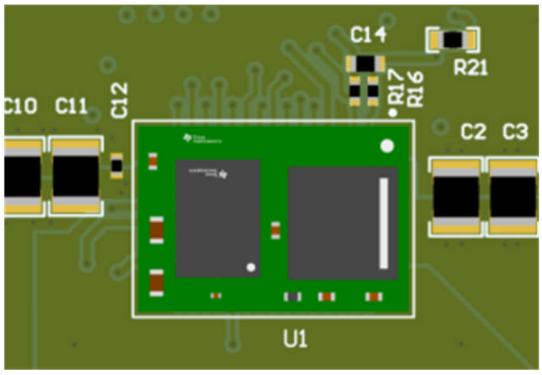

Figure 8-20. Top-Layer Components (Top View)

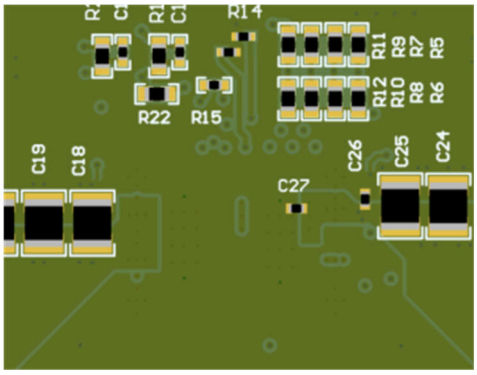

Figure 8-21. Bottom-Layer Components (Top View)

Copyright © 2024 Texas Instruments Incorporated

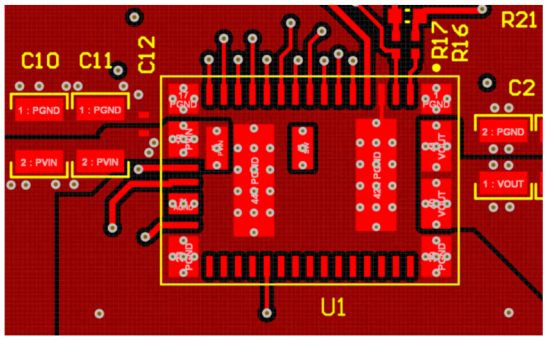

Figure 8-22. Top-Layer Layout (Top View)

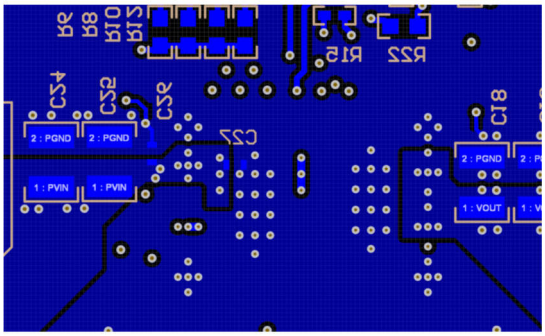

Figure 8-23. Bottom-Layer Layout (Top View)

8.5.2.1 Thermal Performance on the TI EVM

Test conditions: f_{SW} = 650kHz, V_{IN} = 12V, V_{OUT} = 3.32V, I_{OUT} = 25A, Airflow = 200LFM, Peak module temp: 96°C

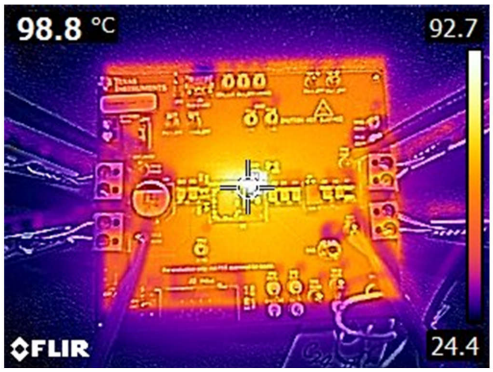

Figure 8-24. Thermal Image at 25°C Ambient, 12 Vin, 3.32V, 25A, 650kHz

Copyright © 2024 Texas Instruments Incorporated

9 Device and Documentation Support

9.1 Device Support

9.1.1 Third-Party Products Disclaimer

TI'S PUBLICATION OF INFORMATION REGARDING THIRD-PARTY PRODUCTS OR SERVICES DOES NOT CONSTITUTE AN ENDORSEMENT REGARDING THE SUITABILITY OF SUCH PRODUCTS OR SERVICES OR A WARRANTY, REPRESENTATION OR ENDORSEMENT OF SUCH PRODUCTS OR SERVICES, EITHER ALONE OR IN COMBINATION WITH ANY TI PRODUCT OR SERVICE.

9.1.2 Development Support

9.1.2.1 Texas Instruments Fusion Digital Power Designer

The TPSM8S6B24S is supported by Texas Instruments Digital Power Designer. Fusion Digital Power Designer is a graphical user interface (GUI) which can be used to configure and monitor the devices through PMBus using a Texas Instruments USB-to-GPIO adapter.

See Fusion Digital Power Designer to download the Texas Instruments software package.

9.1.2.2 Custom Design With WEBENCH® Tools

Click here to create a custom design using the TPSM8S6B24S device with the WEBENCH® Power Designer.

1. Start by entering the input voltage (V_{IN}), output voltage (V_{OUT}), and output current (I_{OUT}) requirements.
2. Optimize the design for key parameters such as efficiency, footprint, and cost using the optimizer dial.
3. Compare the generated design with other possible solutions from Texas Instruments.

The WEBENCH Power Designer provides a customized schematic along with a list of materials with real-time pricing and component availability.

In most cases, these actions are available:

- Run electrical simulations to see important waveforms and circuit performance
- Run thermal simulations to understand board thermal performance
- Export customized schematic and layout into popular CAD formats
- Print PDF reports for the design, and share the design with colleagues

Get more information about WEBENCH tools at www.ti.com/WEBENCH.

9.2 Receiving Notification of Documentation Updates

To receive notification of documentation updates, navigate to the device product folder on ti.com. Click on *Notifications* to register and receive a weekly digest of any product information that has changed. For change details, review the revision history included in any revised document.

9.3 Support Resources

TI E2E™ support forums are an engineer's go-to source for fast, verified answers and design help — straight from the experts. Search existing answers or ask your own question to get the quick design help you need.

Linked content is provided "AS IS" by the respective contributors. They do not constitute TI specifications and do not necessarily reflect TI's views; see TI's Terms of Use.

9.4 Trademarks

TI E2E™ is a trademark of Texas Instruments.
PMBus® is a registered trademark of System Management Interface Forum, Inc..
WEBENCH® is a registered trademark of Texas Instruments.
All trademarks are the property of their respective owners.

Copyright © 2024 Texas Instruments Incorporated

9.5 Electrostatic Discharge Caution



This integrated circuit can be damaged by ESD. Texas Instruments recommends that all integrated circuits be handled with appropriate precautions. Failure to observe proper handling and installation procedures can cause damage.

ESD damage can range from subtle performance degradation to complete device failure. Precision integrated circuits may be more susceptible to damage because very small parametric changes could cause the device not to meet its published specifications.

9.6 Glossary

TI Glossary This glossary lists and explains terms, acronyms, and definitions.

10 Revision History

NOTE: Page numbers for previous revisions may differ from page numbers in the current version.

DATE	REVISION	NOTES
February 2024	*	Initial Release

Copyright © 2024 Texas Instruments Incorporated

11 Mechanical, Packaging, and Orderable Information

The following pages include mechanical packaging and orderable information. This information is the most current data available for the designated devices. These data is subject to change without notice and revision of this document. For browser-based versions of this data sheet, refer to the left-hand navigation.

Copyright © 2024 Texas Instruments Incorporated

PACKAGING INFORMATION

Orderable Device	Status (1)	Package Type	Package Drawing	Pins	Package Qty	Eco Plan (2)	Lead finish/ Ball material (6)	MSL Peak Temp (3)	Op Temp (°C)	Device Marking (4/5)	Samples
TPSM8S6B24MOYR	ACTIVE	QFM	MOY	45	500	RoHS (In Work) & non-Green	NIAU	Level-3-260C-168 HR	-40 to 125	TPSM8S6B24 MOY	Samples

(1) The marketing status values are defined as follows:
ACTIVE: Product device recommended for new designs.
LIFEBUY: TI has announced that the device will be discontinued, and a lifetime-buy period is in effect.
NRND: Not recommended for new designs. Device is in production to support existing customers, but TI does not recommend using this part in a new design.
PREVIEW: Device has been announced but is not in production. Samples may or may not be available.
OBSOLETE: TI has discontinued the production of the device.

(2) **RoHS:** TI defines "RoHS" to mean semiconductor products that are compliant with the current EU RoHS requirements for all 10 RoHS substances, including the requirement that RoHS substance do not exceed 0.1% by weight in homogeneous materials. Where designed to be soldered at high temperatures, "RoHS" products are suitable for use in specified lead-free processes. TI may reference these types of products as "Pb-Free".
RoHS Exempt: TI defines "RoHS Exempt" to mean products that contain lead but are compliant with EU RoHS pursuant to a specific EU RoHS exemption.
Green: TI defines "Green" to mean the content of Chlorine (Cl) and Bromine (Br) based flame retardants meet JS709B low halogen requirements of <=1000ppm threshold. Antimony trioxide based flame retardants must also meet the <=1000ppm threshold requirement.

(3) MSL, Peak Temp. - The Moisture Sensitivity Level rating according to the JEDEC industry standard classifications, and peak solder temperature.

(4) There may be additional marking, which relates to the logo, the lot trace code information, or the environmental category on the device.

(5) Multiple Device Markings will be inside parentheses. Only one Device Marking contained in parentheses and separated by a "~" will appear on a device. If a line is indented then it is a continuation of the previous line and the two combined represent the entire Device Marking for that device.

(6) Lead finish/Ball material - Orderable Devices may have multiple material finish options. Finish options are separated by a vertical ruled line. Lead finish/Ball material values may wrap to two lines if the finish value exceeds the maximum column width.

Important Information and Disclaimer: The information provided on this page represents TI's knowledge and belief as of the date that it is provided. TI bases its knowledge and belief on information provided by third parties, and makes no representation or warranty as to the accuracy of such information. Efforts are underway to better integrate information from third parties. TI has taken and continues to take reasonable steps to provide representative and accurate information but may not have conducted destructive testing or chemical analysis on incoming materials and chemicals. TI and TI suppliers consider certain information to be proprietary, and thus CAS numbers and other limited information may not be available for release.

In no event shall TI's liability arising out of such information exceed the total purchase price of the TI part(s) at issue in this document sold by TI to Customer on an annual basis.

TAPE AND REEL INFORMATION

REEL DIMENSIONS

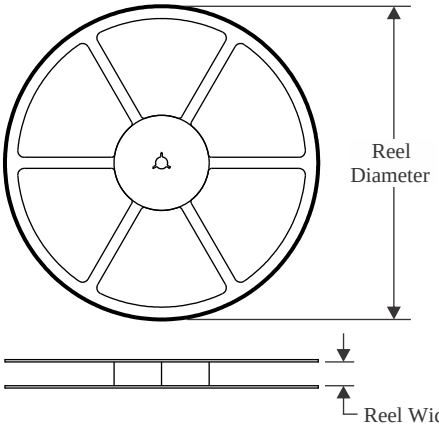

TAPE DIMENSIONS

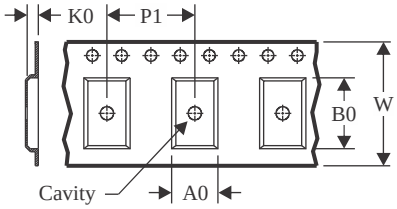

A0	Dimension designed to accommodate the component width
B0	Dimension designed to accommodate the component length
K0	Dimension designed to accommodate the component thickness
W	Overall width of the carrier tape
P1	Pitch between successive cavity centers

QUADRANT ASSIGNMENTS FOR PIN 1 ORIENTATION IN TAPE

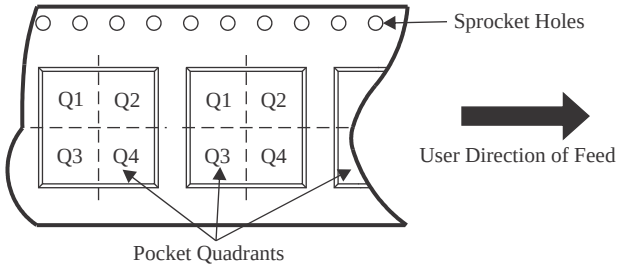

*All dimensions are nominal

Device	Package Type	Package Drawing	Pins	SPQ	Reel Diameter (mm)	Reel Width W1 (mm)	A0 (mm)	B0 (mm)	K0 (mm)	P1 (mm)	W (mm)	Pin1 Quadrant
TPSM8S6B24MOYR	QFM	MOY	45	500	330.2	32.4	11.4	16.4	4.69	16.0	32.0	Q1

TAPE AND REEL BOX DIMENSIONS

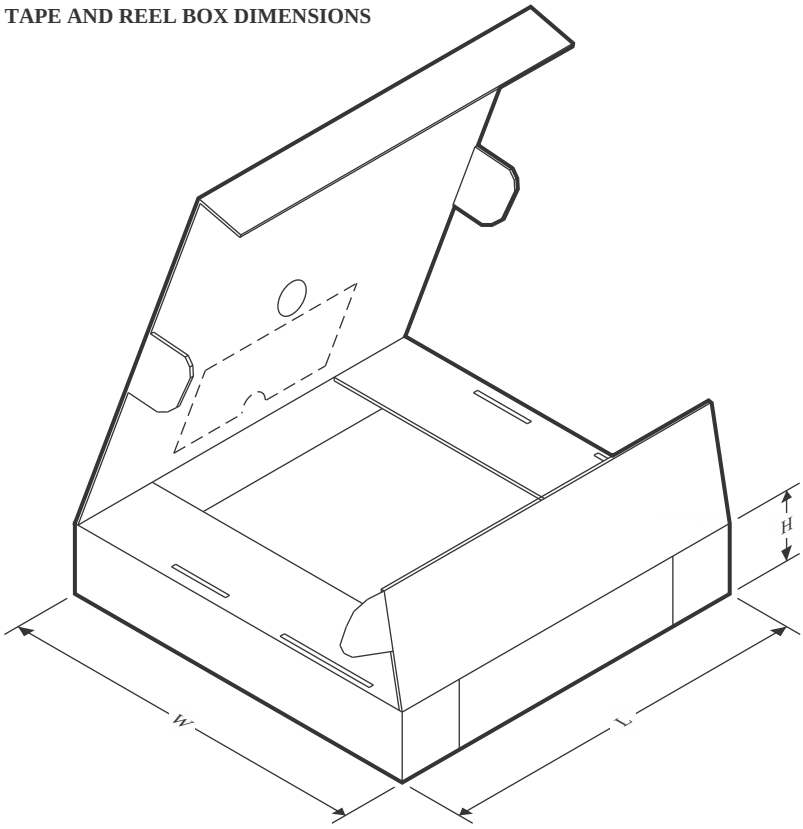

*All dimensions are nominal

Device	Package Type	Package Drawing	Pins	SPQ	Length (mm)	Width (mm)	Height (mm)
TPSM8S6B24MOYR	QFM	MOY	45	500	381.0	381.0	101.6

PACKAGE OUTLINE

MOY0045A

QFM - 4.4 mm max height

QUAD FLATPACK MODULE - NO LEAD

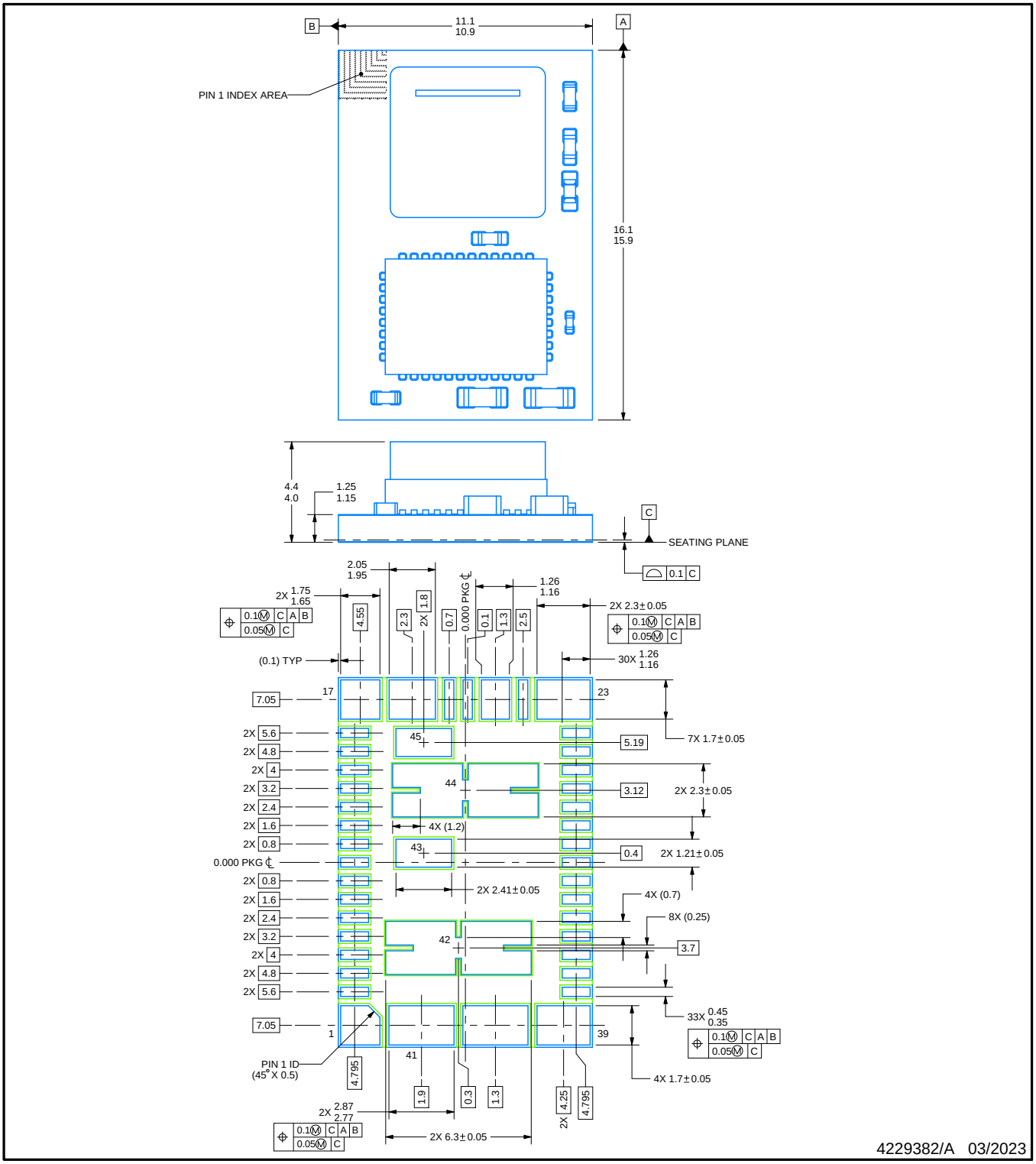

NOTES:

1. All linear dimensions are in millimeters. Any dimensions in parenthesis are for reference only. Dimensioning and tolerancing per ASME Y14.5M.
2. This drawing is subject to change without notice.
3. The package thermal pads must be soldered to the printed circuit board for optimal thermal and mechanical performance.

EXAMPLE BOARD LAYOUT

MOY0045A

QFM - 4.4 mm max height

QUAD FLATPACK MODULE - NO LEAD

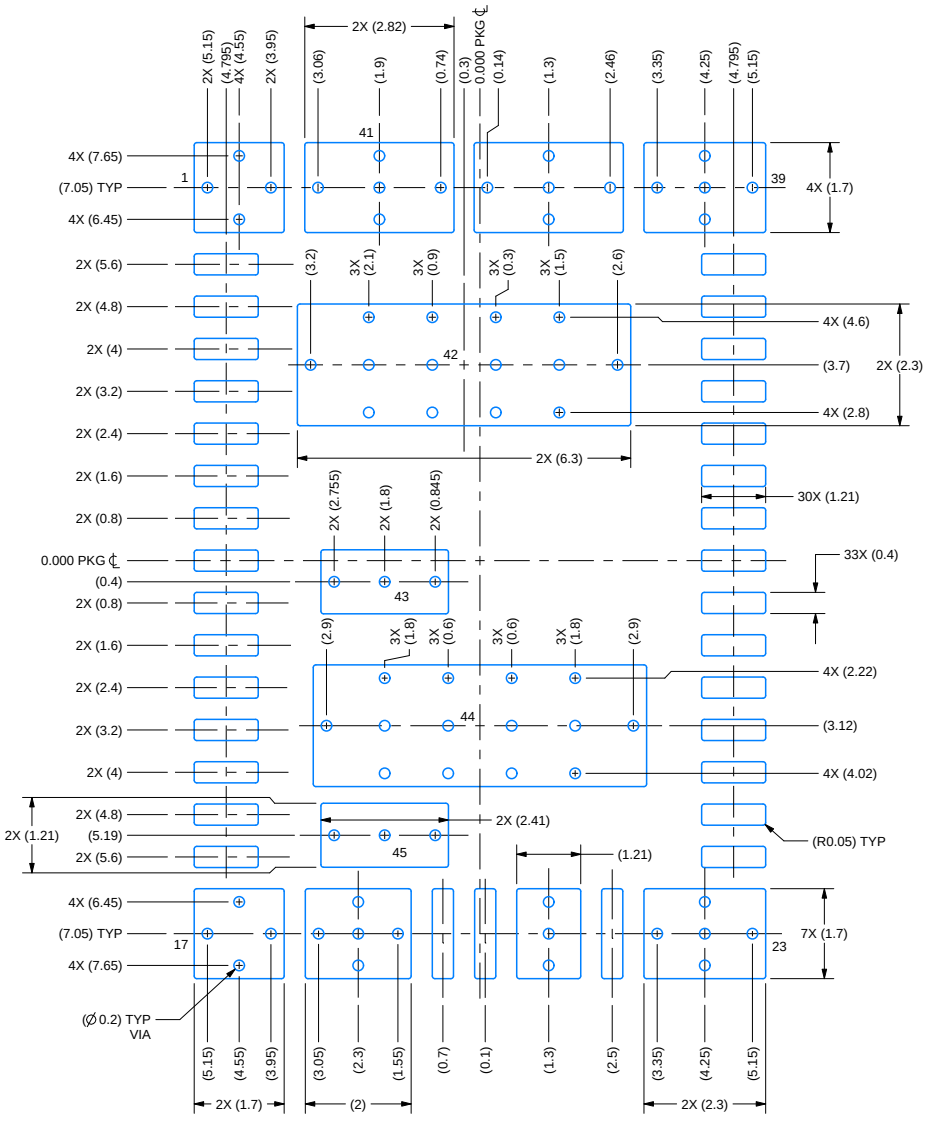

LAND PATTERN EXAMPLE
EXPOSED METAL SHOWN
SCALE: 7X

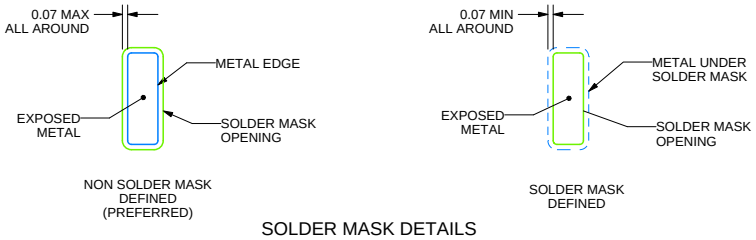

SOLDER MASK DETAILS

4229382/A 03/2023

NOTES: (continued)

4. This package is designed to be soldered to the thermal pads on the board. For more information, see Texas Instruments literature number SLUA271 (www.ti.com/lit/slua271).
5. Vias are optional depending on application, refer to device data sheet. If any vias are implemented, refer to their locations shown on this view. It is recommended that vias under paste be filled, plugged or tented.

EXAMPLE STENCIL DESIGN

MOY0045A

QFM - 4.4 mm max height

QUAD FLATPACK MODULE - NO LEAD

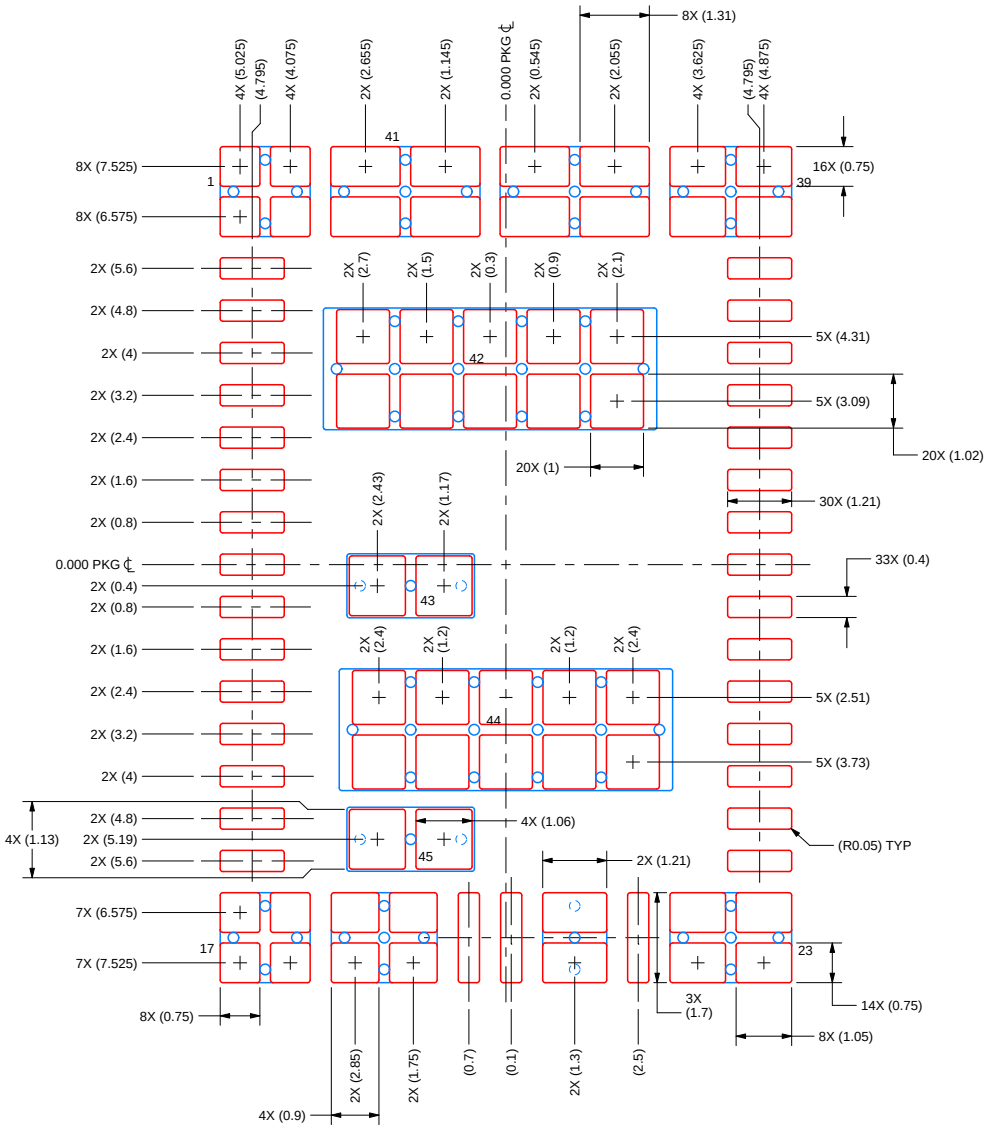

SOLDER PASTE EXAMPLE
BASED ON 0.125 mm THICK STENCIL
SCALE: 7X

PRINTED SOLDER COVERAGE BY AREA UNDER PACKAGE
PINS 1 & 17: 78%
PINS 18, 23 & 39: 80%
PIN 21: 88%
PINS 40, 41, 43 & 45: 82%
PINS 42 & 44: 70%

4229382/A 03/2023

IMPORTANT NOTICE AND DISCLAIMER

TI PROVIDES TECHNICAL AND RELIABILITY DATA (INCLUDING DATA SHEETS), DESIGN RESOURCES (INCLUDING REFERENCE DESIGNS), APPLICATION OR OTHER DESIGN ADVICE, WEB TOOLS, SAFETY INFORMATION, AND OTHER RESOURCES “AS IS” AND WITH ALL FAULTS, AND DISCLAIMS ALL WARRANTIES, EXPRESS AND IMPLIED, INCLUDING WITHOUT LIMITATION ANY IMPLIED WARRANTIES OF MERCHANTABILITY, FITNESS FOR A PARTICULAR PURPOSE OR NON-INFRINGEMENT OF THIRD PARTY INTELLECTUAL PROPERTY RIGHTS.

These resources are intended for skilled developers designing with TI products. You are solely responsible for (1) selecting the appropriate TI products for your application, (2) designing, validating and testing your application, and (3) ensuring your application meets applicable standards, and any other safety, security, regulatory or other requirements.

These resources are subject to change without notice. TI grants you permission to use these resources only for development of an application that uses the TI products described in the resource. Other reproduction and display of these resources is prohibited. No license is granted to any other TI intellectual property right or to any third party intellectual property right. TI disclaims responsibility for, and you will fully indemnify TI and its representatives against, any claims, damages, costs, losses, and liabilities arising out of your use of these resources.

TI’s products are provided subject to TI’s Terms of Sale or other applicable terms available either on ti.com or provided in conjunction with such TI products. TI’s provision of these resources does not expand or otherwise alter TI’s applicable warranties or warranty disclaimers for TI products.

TI objects to and rejects any additional or different terms you may have proposed.

Mailing Address: Texas Instruments, Post Office Box 655303, Dallas, Texas 75265
Copyright © 2024, Texas Instruments Incorporated