UCC33420 Ultra-Small, 1.5W, 5.0V, 3kV$_{RMS}$ Isolation, Industrial DC/DC Module

1 Features

- 1.5W maximum output power
- 4.5V to 5.5V input voltage operation range
- 5.0V, 5.5V regulated selectable output voltage
  - 5.0V: 300mA available load current
- 0.5% typical load regulation
- 4mV/V typical line regulation
- Robust isolation barrier:
  - Isolation rating: 3kV$_{RMS}$
  - Surge capability: 6.5kV$_{PK}$
  - Working voltage: 1159V$_{PK}$
  - 200V/ns common mode transient immunity
- Power dense isolated DC/DC module with integrated transformer technology
- Adaptive spread spectrum modulation (SSM)
- Meets CISPR-32 Class B emission
- Strong magnetic fields immunity
- Overload and short circuit protection
- Thermal shutdown
- Low inrush current soft-start
- Enable pin with fault reporting mechanism
- Planned Safety-Related Certifications:
  - DIN EN IEC 60747-17 (VDE 0884-17)
  - UL 1577 / CSA component recognition program
  - IEC 62368-1 and IEC 60601-1 certifications
- Extended temperature range: –40°C to 125°C
- VSON-12 (4.00mm × 5.00mm) package

2 Applications

- Factory automation PLC modules
- EV charging infrastructure
- Isolated bias for E-mode GaN
- Isolated bias power for digital isolators
- Isolated bias power for RS-485, RS-422 and CAN

3 Description

The UCC33420 is an industrial DC/DC power module with integrated transformer technology designed to provide 1.5W of isolated output power. It can support an input voltage operation range of 4.5V to 5.5V and regulate 5.0V output voltage with a selectable headroom of 5.5V.

The UCC33420 features a proprietary transformer architecture that achieves a 3kV$_{RMS}$ isolation rating, while simultaneously supporting low EMI and excellent load regulation.

The UCC33420 integrates protection features for increased system robustness such as enable pin with fault reporting mechanism, short circuit protection and thermal shutdown.

The UCC33420 comes in a miniaturized, low-profile VSON (4.00mm × 5.00mm) package with 1.00mm height and > 4.1mm clearance and creepage.

Device Information

PART NUMBER	PACKAGE(1)	BODY SIZE (NOM)
UCC33420	RAQ (VSON-FCRLF 12)	4.00mm × 5.00mm

(1) For all available packages, see Section 11.

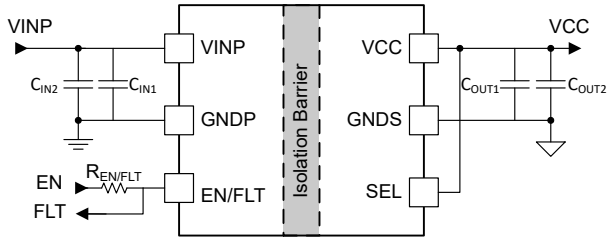

Simplified Application

An IMPORTANT NOTICE at the end of this data sheet addresses availability, warranty, changes, use in safety-critical applications, intellectual property matters and other important disclaimers. PRODUCTION DATA.

Table of Contents

1 Features....1
2 Applications....1
3 Description....1
4 Device Comparison....3
5 Pin Configuration and Functions....4
6 Specifications....5
6.1 Absolute Maximum Ratings....5
6.2 ESD Ratings....5
6.3 Recommended Operating Conditions....5
6.4 Thermal Information....6
6.5 Power Ratings....6
6.6 Insulation Specifications....6
6.7 Safety-Related Certifications....8
6.8 Safety Limiting Values....8
6.9 Electrical Characteristics....8
6.10 Typical Characteristics....11
7 Detailed Description....14
7.1 Overview....14
7.2 Functional Block Diagram....14
7.3 Feature Description....15
7.4 Device Functional Modes....21
8 Application and Implementation....22
8.1 Application Information....22
8.2 Typical Application....22
8.3 Power Supply Recommendations....23
8.4 Layout....23
9 Device and Documentation Support....26
9.1 Device Support....26
9.2 Documentation Support....26
9.3 Receiving Notification of Documentation Updates....26
9.4 Support Resources....26
9.5 Trademarks....26
9.6 Electrostatic Discharge Caution....26
9.7 Glossary....26
10 Revision History....27
11 Mechanical and Packaging Information....28

Copyright © 2025 Texas Instruments Incorporated

4 Device Comparison

Table 4-1. Device Comparison Table

DEVICE NAME	V_{VIN} RANGE	OUTPUT (VCC)	TYPICAL POWER	ISOLATION RATING
UCC33420-Q1	4.5V to 5.5V	5.0V / 5.5V	1.5W	Basic
UCC33420	4.5V to 5.5V	5.0V / 5.5V	1.5W	Basic
UCC33020-Q1	3.0V to 5.5V	5.0V / 5.5V	1.0W	Basic
UCC33410-Q1	4.5V to 5.5V	3.3V / 3.7V	1.0W	Basic
UCC33410	4.5V to 5.5V	3.3V / 3.7V	1.0W	Basic
UCC33421-Q1	4.5V to 5.5V	5.0V / 5.5V	1.5W	Reinforced
UCC33411-Q1	4.5V to 5.5V	3.3V / 3.7V	1.0W	Reinforced

Copyright © 2025 Texas Instruments Incorporated

5 Pin Configuration and Functions

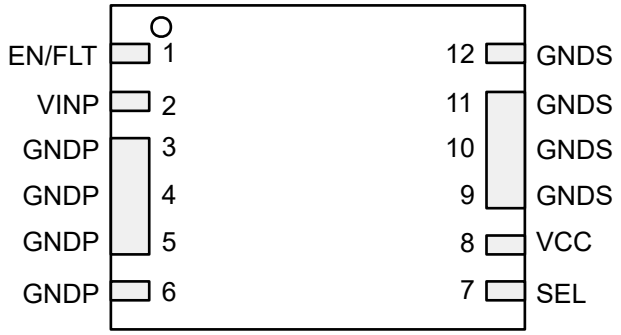

Figure 5-1. RAQ VSON-FCRLF 12-Pin Package (top view)

Table 5-1. Pin Functions

PIN		TYPE (1)	DESCRIPTION
NAME	NO.		
EN/FLT	1	I/O	Multi-function Enable input pin and fault output pin. Connect to microcontroller through an 18kΩ or greater pull-up resistor. Enable input pin: Forcing EN low disables the device. Pull high to enable normal device functionality. Fault output pin: This pin is pulled low for 200µs to alert that power converter is shutdown due to fault conditions.
VINP	2	P	Primary side input supply voltage pin. 15nF (C_{IN1}) and 10µF (C_{IN2}) ceramic bypass capacitors placed close to device pins are required between VINP and GNDP pins.
GNDP	3	G	Power ground return connection for VINP.
	4		
	5		
	6		
SEL	7	I	VCC selection pin. VCC setpoint is 5.0V when SEL is connected to VCC, and 5.5V when SEL is shorted to GNDS.
VCC	8	P	Isolated supply output voltage pin. 15nF (C_{OUT1}) and 22µF (C_{OUT2}) ceramic bypass capacitors placed close to device pins are required between VCC and GNDS pins.
GNDS	9	G	Power ground return connection for VCC.
	10		
	11		
	12		

(1) P = Power, G = Ground, I = Input, O = Output

Copyright © 2025 Texas Instruments Incorporated

6 Specifications

6.1 Absolute Maximum Ratings

over operating free-air temperature range (unless otherwise noted)(1)

PIN	MIN	TYP	MAX	UNIT
VINP to GNDP, T_A = -40°C to 105°C	–0.3		6.5	V
VINP to GNDP, T_A = 105°C to 125°C	–0.3		6.3	V
EN/FLT to GNDP	–0.3		6.5	V
VCC to GNDS	–0.3		6.5	V
SEL to GNDS	–0.3		6.5	V
Total VCC output power at T_A=25°C, VINP = 4.5V, VCC = 5.0V, $P_{OUT_VCC_MAX}$			1.65	W
Total VCC output power at T_A=25°C, VINP = 5.5V, VCC = 5.0V, $P_{OUT_VCC_MAX}$			2.4	W
VCC maximum current sink capability			30	mA
Operating junction temperature range, T_J	–40		150	°C
Storage temperature, T_{stg}	–65		150	°C

(1) Stresses beyond those listed under *Absolute Maximum Ratings* may cause permanent damage to the device. These are stress ratings only, which do not imply functional operation of the device at these or any other conditions beyond those indicated under Recommended Operating Conditions. Exposure to absolute-maximum-rated conditions for extended periods may affect device reliability.

6.2 ESD Ratings

			VALUE	UNIT
$V_{(ESD)}$	Electrostatic discharge	Human-body model (HBM), per ANSI/ESDAJEDEC JS-001(1)	±3000	V
		Charged-device model (CDM), per JEDEC specification JESD2222-C101(2)	±1000	V

(1) JEDEC document JEP155 states that 500V HBM allows safe manufacturing with a standard ESD control process.
(2) JEDEC document JEP157 states that 250V CDM allows safe manufacturing with a standard ESD control process.

6.3 Recommended Operating Conditions

over operating free-air temperature range (unless otherwise noted)

PIN		MIN	TYP	MAX	UNIT
V_{VINP}	Primary-side input voltage to GNDP	4.5		5.5	V
$V_{EN/FLT}$	EN/FLT pin voltage to GNDP	0		5.5	V
V_{VCC}	Secondary-side Isolated output voltage to GNDS	0		5.7	V
V_{SEL}	SEL pin input voltage to GNDS	0		5.7	V
P_{VCC}	VCC output power at VINP=5.0V±10%, VCC = 5.0V, T_A=25°C - 85°C (1)		1.5		W
P_{VCC}	VCC output power at VINP=5.0V±10%, VCC = 5.0V, T_A=105°C (1)		1		W
P_{VCC}	VCC output power at VINP=5.0V±10%, VCC = 5.0V, T_A=125°C (1)		0.5		W
Static CMTI	Static Common mode transient immunity rating (dV/dt rate across the isolation barrier)			200	V/ns
Dynamic CMTI	Dynamic Common mode transient immunity rating (dV/dt rate across the isolation barrier)			200	V/ns
T_A	Ambient temperature	–40		125	℃
T_J	Junction temperature	–40		150	℃

(1) See the VCC Load Recommended Operating Area section for maximum rated values across temperature and VINP conditions for different VCC output voltage settings.

Copyright © 2025 Texas Instruments Incorporated

6.4 Thermal Information

THERMAL METRIC(1)		VSON-FCRLF 12 PINS	UNIT
$R_{\theta JA}$	Junction-to-ambient thermal resistance	59.7	°C/W
$R_{\theta JC(top)}$	Junction-to-case (top) thermal resistance	7.35	°C/W
$R_{\theta JB}$	Junction-to-board thermal resistance	25.6	°C/W
Ψ_{JA}	Junction-to-ambient characterization parameter	58.0	°C/W
Ψ_{JT}	Junction-to-top characterization parameter	9.2	°C/W
Ψ_{JB}	Junction-to-board characterization parameter	26.8	°C/W

(1) The thermal resistances (R) are based on JEDEC board, and the characterization parameters (Ψ) are based on the EVM described in the Layout section. For more information about traditional and new thermal metrics, see the Semiconductor and IC Package Thermal Metrics application report.

6.5 Power Ratings

V_{VINP} = 5.0V, C_{IN1} = C_{OUT1} = 15nF, C_{IN2} = 10µF, C_{OUT2} = 22µF SEL connected to VCC, $V_{EN/FLT}$ = 5.0V, T_A = 25°C.

PARAMETER		TEST CONDITIONS	VALUE	UNIT
P_D	Power dissipation	I_{VCC} = 300 mA	1050	mW
P_{DP}	Power dissipation by driver side (primary)	I_{VCC} = 300 mA	360	mW
P_{DS}	Power dissipation by rectifier side (secondary)	I_{VCC} = 300 mA	290	mW
P_{DT}	Power dissipation by transformer	I_{VCC} = 300 mA	400	mW

6.6 Insulation Specifications

PARAMETER		TEST CONDITIONS	VALUE	UNIT
General				
CLR	External clearance (1)	Shortest terminal-to-terminal distance through air	> 4.1	mm
CPG	External creepage (1)	Shortest terminal-to-terminal distance across the package surface	> 4.1	mm
DTI	Distance through the insulation	Minimum internal gap (internal clearance)	> 50	µm
CTI	Comparative tracking index	DIN EN 60112 (VDE 0303-11); IEC 60112	> 600	V
	Material group	According to IEC 60664-1	I	
	Overvoltage category	Rated mains voltage ≤ 300V_{RMS}	I-III	
		Rated mains voltage ≤ 600V_{RMS}	I-II	
		Rated mains voltage ≤ 1000V_{RMS}	I-I	
DIN EN IEC60747-17 (VDE 0884-17) (2)				
V_{IORM}	Maximum repetitive peak isolation voltage	AC voltage (bipolar)	1159	V_{PK}
V_{IOWM}	Maximum working isolation voltage	AC voltage (sine wave) Time dependent dielectric breakdown (TDDB) test	820	V_{RMS}
		DC voltage	1000	V_{DC}
V_{IOTM}	Maximum transient isolation voltage	V_{TEST} = V_{IOTM}, t = 60s (qualification)	4243	V_{PK}
		V_{TEST} = 1.2 × V_{IOTM} , t = 1s (100%) production	5091	V_{PK}
V_{IMP}	Impulse Voltage (3)	Tested in air, 1.2/50µs waveform per IEC 62368-1	5000	V_{PK}
V_{IOSM}	Maximum surge isolation voltage (4)	Tested in oil (qualification test), 1.2/50µs waveform per IEC 62368-1.	6500	V_{PK}

Copyright © 2025 Texas Instruments Incorporated

6.6 Insulation Specifications (continued)

PARAMETER		TEST CONDITIONS	VALUE	UNIT
q_{pd}	Apparent charge (5)	Method a: After I/O safety test subgroup 2/3, V_{ini} = V_{IOTM}, t_{ini} = 60s; $V_{pd(m)}$ = 1.2 × V_{IORM}, t_m = 10s	≤ 5	pC
		Method a: After environmental tests subgroup 1, V_{ini} = V_{IOTM}, t_{ini} = 60s; $V_{pd(m)}$ = 1.3 × V_{IORM}, t_m = 10s	≤ 5	pC
		Method b1: At routine test (100% production), V_{ini} = 1.2 x V_{IOTM}, t_{ini} = 1s; $V_{pd(m)}$ = 1.5 × V_{IORM}, t_m = 1s	≤ 5	pC
C_{IO}	Barrier capacitance, input to output (6)	V_{IO} = 0.4 sin (2πft), f = 1MHz	< 3	pF
R_{IO}	Isolation resistance, input to output (6)	V_{IO} = 500V, T_A = 25°C	> 10^{12}	Ω
		V_{IO} = 500V, 100°C ≤ T_A ≤ 125°C	> 10^{11}	Ω
		V_{IO} = 500V at T_S = 150°C	> 10^9	Ω
	Pollution degree		2	
	Climatic category		40/125/21	
UL 1577				
V_{ISO}	Withstand isolation voltage	Withstand isolation voltage V_{TEST} = V_{ISO} , t = 60s (qualification) V_{TEST} = 1.2 × V_{ISO} , t=1s (100% production)	3000	V_{RMS}

(1) Creepage and clearance requirements should be applied according to the specific equipment isolation standards of an application. Care should be taken to maintain the creepage and clearance distance of a board design to ensure that the mounting pads of the isolator on the printed-circuit board do not reduce this distance. Creepage and clearance on a printed-circuit board become equal in certain cases. Techniques such as inserting grooves and/or ribs on a printed-circuit board are used to help increase these specifications.
(2) This coupler is suitable for *basic electrical insulation* only within the maximum operating ratings. Compliance with the safety ratings shall be ensured by means of suitable protective circuits.
(3) Testing is carried out in air to determine the surge immunity of the package.
(4) Testing is carried out in oil to determine the intrinsic surge immunity of the isolation barrier
(5) Apparent charge is electrical discharge caused by a partial discharge (pd).
(6) All pins on each side of the barrier tied together creating a two-terminal device

Copyright © 2025 Texas Instruments Incorporated

6.7 Safety-Related Certifications

VDE	UL	UL	UL
Plan to certify according to DIN EN IEC 60747-17 (VDE 0884-17)	Plan to certify under UL 1577 / CSA Component Recognition program	Plan to certify according to IEC 62368-1	Plan to certify according to IEC 60601-1
Certificate number: (planned)	Certificate number: (planned)	File number: (planned)	Certificate number: (planned)

6.8 Safety Limiting Values

Safety limiting(1) intends to minimize potential damage to the isolation barrier upon failure of input or output circuitry. A failure of the I/O can allow low resistance to ground or the supply and, without current limiting, dissipate sufficient power to over-heat the die and damage the isolation barrier potentially leading to secondary system failures.

PARAMETER		TEST CONDITIONS	MAX	UNIT
I_S	Safety input, output or supply current	$R_{\theta JA}$ = 59.7°C/W, V_{VINP} = 5.5V, T_J = 150°C, T_A = 25°C, P_{OUT} = 2.4W	817	mA
		$R_{\theta JA}$ = 59.7°C/W, V_{VINP} = 4.5V, T_J = 150°C, T_A = 25°C, P_{OUT} = 1.65W	832	mA
P_S	Safety power dissipation (input power - output power)	$R_{\theta JA}$ = 59.7 °C/W, T_J = 150 °C, T_A = 25 °C	2.1	W
T_S	Safety temperature		150	°C

(1) The maximum safety temperature, T_S, has the same value as the maximum junction temperature, T_J, specified for the device. The I_S and P_S parameters represent the safety current and safety power respectively. The maximum limits of I_S and PS should not be exceeded. These limits vary with the ambient temperature, T_A.
The junction-to-air thermal resistance, $R_{\theta JA}$, in the Thermal Information table is that of a device installed on a high-K test board for leaded surface-mount packages. Use these equations to calculate the value for each parameter:
$T_J = T_A + R_{qJA} \times P$, where P is the power dissipated in the device.
$T_{J(max)} = T_S = T_A + R_{\theta JA} \times P_S$, where $T_{J(max)}$ is the maximum allowed junction temperature.
$P_S = I_S \times V_{VINP}$, where V_{VINP} is the maximum input voltage.

6.9 Electrical Characteristics

Over operating temperature range (T_J = –40°C to 150°C), V_{VINP} = 5.0V, C_{IN1} = C_{OUT1} = 15nF, C_{IN2} = 10µF, C_{OUT2} = 22µF SEL connected to VCC, $V_{EN/FLT}$ = 5.0V unless otherwise noted. All typical values at V_{VINP}=5.0V, T_A = 25°C.

PARAMETER		TEST CONDITIONS	MIN	TYP	MAX	UNIT
INPUT SUPPLY (Primary-side. All voltages with respect to GNDP)						
I_{VINP_Q}	VINP quiescent current,disabled	EN/FLT=Low, VINP=5.0V, no load			180	uA
I_{VINP_NL}	VINP operating current, no load	EN/FLT=High; VINP=4.5V-5.5V; VCC=5.0V no load		7	15	mA
		EN/FLT=High; VINP=4.5V-5.5V; VCC=5.5V no load		7	15	mA
I_{VINP_FL}	VINP operating current, full load	EN/FLT=High; VINP=5.0V; VCC=5.0V, I_{out}=300mA, T_A=25°C	489	508	529	mA
I_{VINP_SC}	VINP operating average current under continuous short circuit operation	EN/FLT=High; VINP=5.0V; VCC=0V, T_A=25°C (1)		45		mA
UVLOP COMPARATOR (Primary-side. All voltages with respect to GNDP)						
$V_{VINP_UVLO_R}$	VINP under-voltage lockout rising threshold			2.8	2.9	V
$V_{VINP_UVLO_F}$	VINP under-voltage lockout falling threshold		2.6	2.7		V
V_{UVLO_H}	VINP under-voltage lockout hysteresis			0.1		V
OVLO COMPARATOR (Primary-side. All voltages with respect to GNDP)						
$V_{VINP_OVLO_R}$	VINP over-voltage lockout rising threshold			5.77	5.9	V
$V_{VINP_OVLO_F}$	VINP over-voltage lockout falling threshold		5.55	5.72		V
V_{VINP_H}	VINP over-voltage lockout hysteresis			0.05		V
Switching Charactarestics						

Copyright © 2025 Texas Instruments Incorporated

6.9 Electrical Characteristics (continued)

Over operating temperature range (T_J = –40°C to 150°C), V_{VINP} = 5.0V, C_{IN1} = C_{OUT1} = 15nF, C_{IN2} = 10µF, C_{OUT2} = 22µF SEL connected to VCC, $V_{EN/FLT}$ = 5.0V unless otherwise noted. All typical values at V_{VINP}=5.0V, T_A = 25°C.

PARAMETER		TEST CONDITIONS	MIN	TYP	MAX	UNIT
f_{Sw}	DC-DC Converter switching frequency			64.5		MHz
PRIMARY SIDE THERMAL SHUTDOWN						
TSD_{P_R}	Primary-side over-temperature shutdown rising threshold		150	165		ºC
TSD_{P_F}	Primary-side over-temperature shutdown falling threshold		130			ºC
TSD_{P_H}	Primary-side over-temperature shutdown hysteresis			20		ºC
EN/FLT PIN						
V_{EN_R}	Enable voltage rising threshold	EN/FLT = 0V to 5.0V			2.1	V
V_{EN_F}	Enable voltage falling threshold	EN/FLT = 5.0V to 0V	0.8			V
I_{EN}	Enable Pin Input Current	EN/FLT = 5.0V			10	uA
V_{FLT}	EN/FLT pin voltage when faults occur	With a minimum 18kΩ (10% tolerance) resistor connected to EN/FLT pin			0.5	V
t_{Fault}	EN/FLT pull down interval when faults occur	EN/FLT > 0.5V , Fault occur		200		us
VCC OUTPUT VOLTAGE (Secondary-side. All voltages with respect to GNDS)						
V_{CC}	Isolated supply regulated output voltage	VINP = 5.0V, SEL = VCC, I_{out} = 0 - 300mA	4.85	5	5.15	V
		VINP = 5.0V, SEL = GNDS, I_{out} = 0 - 200mA	5.34	5.5	5.67	V
	Isolated supply regulated output voltage accuracy	VINP = 4.5V - 5.5V; VCC = 5.0V / 5.5V	-4		4	%
V_{CC_Line}	V_{cc} DC line regulation	VINP = 4.5V - 5.5V; VCC =5.0V, I_{out} = 150mA		4	12	mV/V
		VINP = 4.5V - 5.5V; VCC = 5.5V, I_{out} = 150mA		4	12	mV/V
V_{CC_Load}	V_{cc} DC load regulation	VINP = 5.0V; VCC = 5.0V, I_{out} = 0-300mA		0.5	0.7	%
		VINP = 5.0V; VCC = 5.5V, I_{out} = 0-200mA		0.5	0.7	%
V_{CC_Ripple}	Voltage ripple on isolated supply output	20-MHz bandwidth, VINP = 5.0V , VCC = 5.0V, I_{out} = 300mA, T_A=25°C (1)		50	75	mV
EFF	Efficiency P_{VCC} to P_{VINP}	VINP = 5.0V, VCC = 5.0V, I_{out} = 300mA, T_A = 25°C		59		%
V_{CC_Rise}	VCC rise time from 10% - 90%	VINP = 5.0V, VCC = 5.0V, T_A = 25°C, I_{out} = 70mA (1)		450	600	us
		VINP = 5.0V, VCC = 5.5V, T_A = 25°C, I_{out} = 70mA (1)		450	650	us
VCC UVP UNDER -VOLTAGE PROTECTION (Secondary-side. All voltages with respect to GNDS)						
K_{VCC_UVP}	VCC under-voltage protection threshold ratio	VCC = 5.0V, V_{UVP} = VCC * 90%		90		%
V_{UVP_H}	VCC under-voltage protection hysteresis	VCC = 5.0V	79	100	121	mV
V_{UVP_H}	VCC under-voltage protection hysteresis	VCC = 5.5V	87	110	133	mV
VCC OVP OVER -VOLTAGE PROTECTION (Secondary-side. All voltages with respect to GNDS)						
$V_{VCC_OVP_R}$	VCC over-voltage protection rising threshold	VCC = 5.0V		5.45	5.5	V
$V_{VCC_OVP_H}$	VCC over-voltage protection hysteresis	VCC = 5.0V		0.1		V
$V_{VCC_OVP_R}$	VCC over-voltage protection rising threshold	VCC = 5.5V		5.9	5.96	V

Copyright © 2025 Texas Instruments Incorporated

6.9 Electrical Characteristics (continued)

Over operating temperature range (T_J = –40°C to 150°C), V_{VINP} = 5.0V, C_{IN1} = C_{OUT1} = 15nF, C_{IN2} = 10µF, C_{OUT2} = 22µF SEL connected to VCC, $V_{EN/FLT}$ = 5.0V unless otherwise noted. All typical values at V_{VINP}=5.0V, T_A = 25°C.

PARAMETER		TEST CONDITIONS	MIN	TYP	MAX	UNIT
$V_{VCC_OVP_H}$	VCC over-voltage protection hysteresis	VCC = 5.5V		0.12		V
SECONDARY SIDE THERMAL SHUTDOWN						
TSD_{S_R}	Secondary-side over-temperature shutdown rising threshold		150	165		ºC
TSD_{S_F}	Secondary-side over-temperature shutdown falling threshold		130			ºC
TSD_{S_H}	Secondary-side over-temperature shutdown hysteresis			20		ºC

(1) Specified by design. Not production tested

Copyright © 2025 Texas Instruments Incorporated

6.10 Typical Characteristics

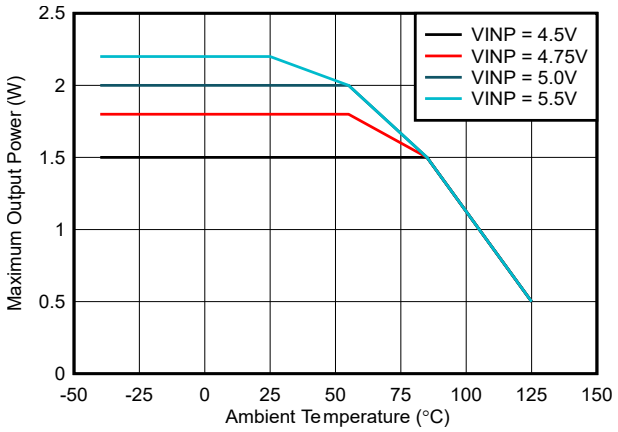

Figure 6-1. Maximum Output Power vs Ambient Temperature : VCC = 5.0V , C_{OUT2} = 22µF

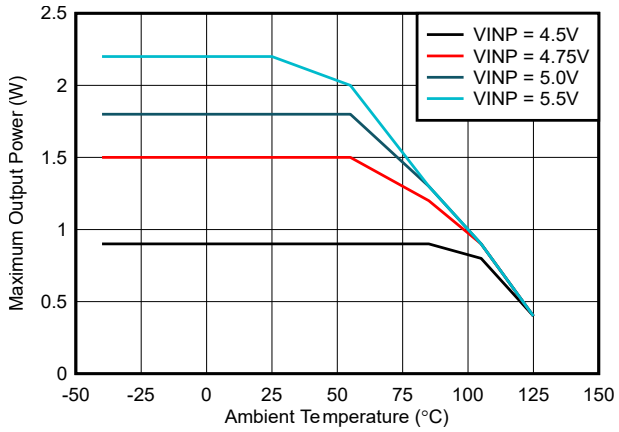

Figure 6-2. Maximum Output Power vs Ambient Temperature : VCC = 5.5V , C_{OUT2} = 22µF

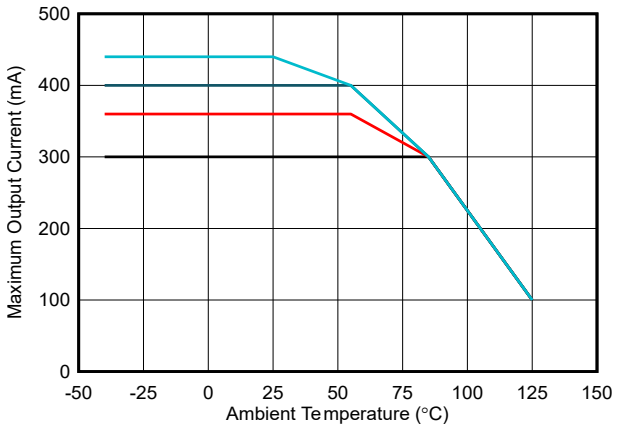

Figure 6-3. Maximum Output Current vs Ambient Temperature : VCC = 5.0V , C_{OUT2} = 22µF

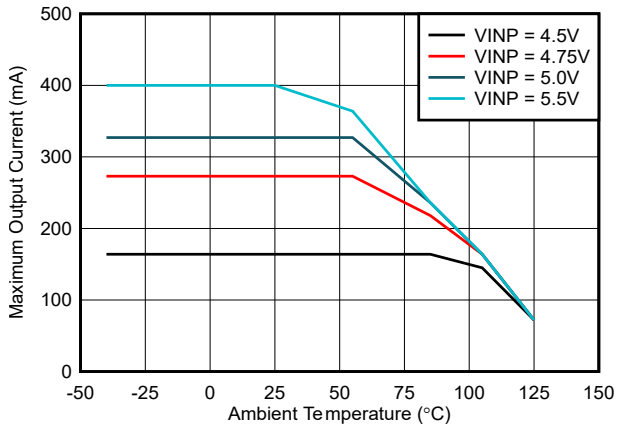

Figure 6-4. Maximum Output Current vs Ambient Temperature : VCC = 5.5V , C_{OUT2} = 22µF

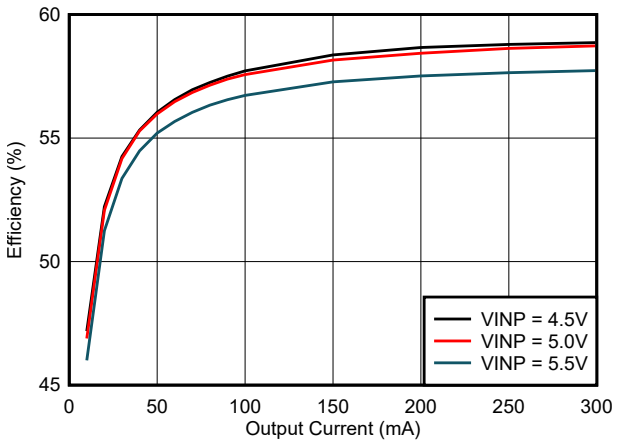

Figure 6-5. Efficiency vs Load Current (I_{VCC}): VCC = 5.0V , T_A = 25°C , C_{OUT2} = 22µF

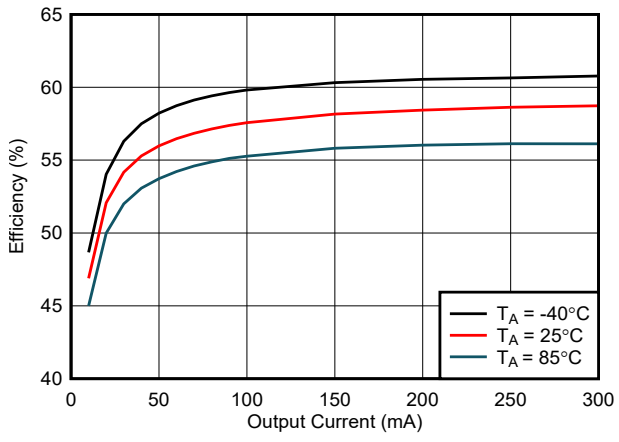

Figure 6-6. Efficiency vs Load Current (I_{VCC}): VCC = 5.0V , VINP = 5.0V , C_{OUT2} = 22µF

Copyright © 2025 Texas Instruments Incorporated

6.10 Typical Characteristics (continued)

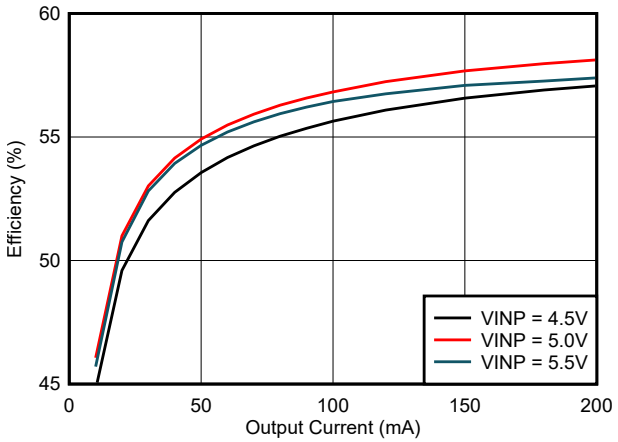

Figure 6-7. Efficiency vs Load Current (I_{VCC}): VCC = 5.5V , T_A = 25°C , C_{OUT2} = 22µF

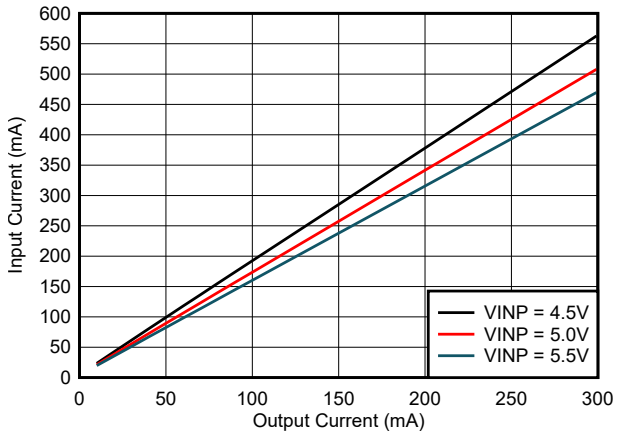

Figure 6-8. Input Current (I_{VINP}) vs Load Current (I_{VCC}): VCC = 5.0V , T_A = 25°C , C_{OUT2} = 22µF

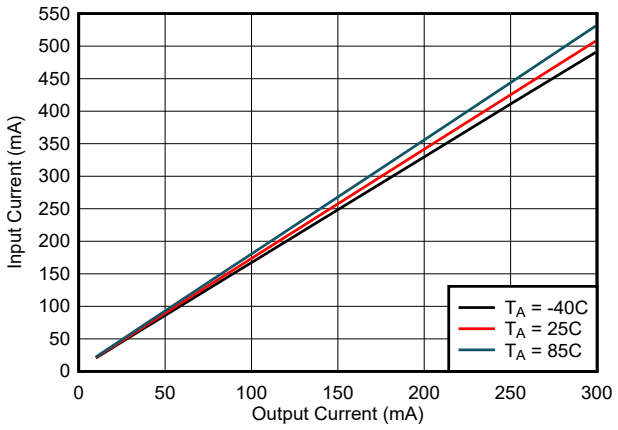

Figure 6-9. Input Current (I_{VINP}) vs Load Current (I_{VCC}): VCC = 5.0V , VINP = 5.0V , C_{OUT2} = 22µF

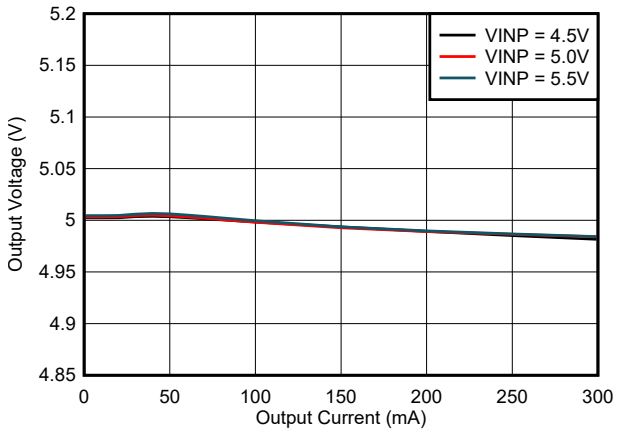

Figure 6-10. Output Voltage Regulation (V_{VCC}) vs Load Current (I_{VCC}): VCC = 5.0V , T_A = 25°C , C_{OUT2} = 22µF

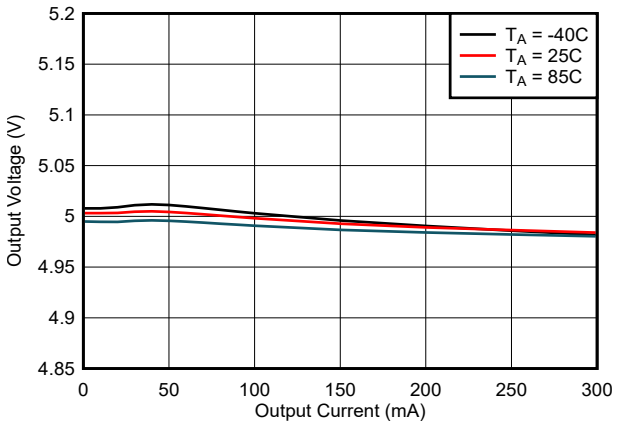

Figure 6-11. Output Voltage Regulation (V_{VCC}) vs Load Current (I_{VCC}): VCC = 5.0V ,VINP = 5.0V , C_{OUT2} = 22µF

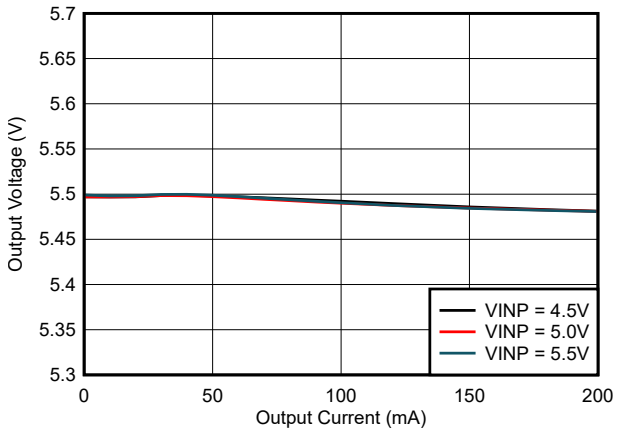

Figure 6-12. Output Voltage Regulation (V_{VCC}) vs Load Current (I_{VCC}): VCC = 5.5V , T_A = 25°C , C_{OUT2} = 22µF

Copyright © 2025 Texas Instruments Incorporated

6.10 Typical Characteristics (continued)

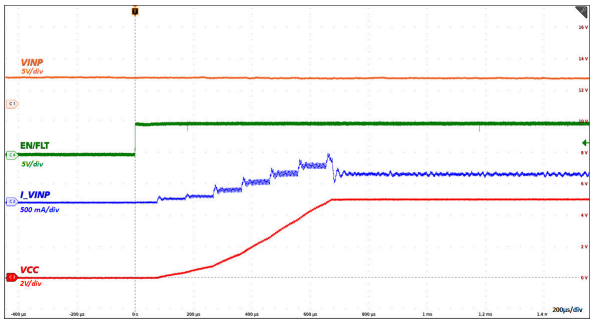

Figure 6-13. Start-Up with En/FLT From Low to High: VINP = 5.0V , VCC = 5.0V , 18Ω Load

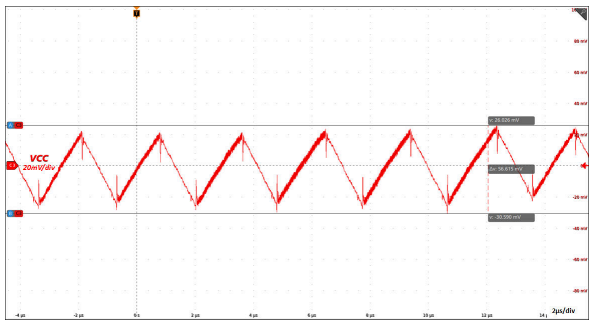

Figure 6-14. Steady State Output Voltage Ripple: VINP = 5.0V , VCC = 5.0V , 300mA Load

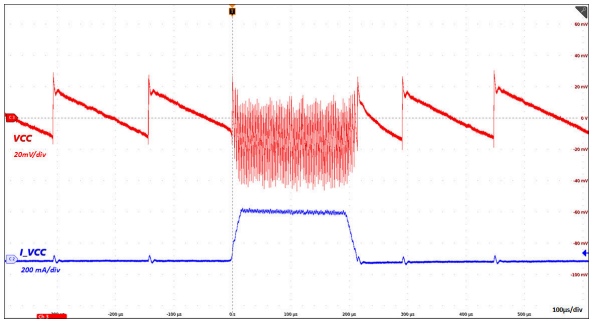

Figure 6-15. Load Transient: VINP = 5.0V, VCC = 5.0V , C_{OUT2} = 22µF , I_{VCC} = 0mA - 300mA - 0mA

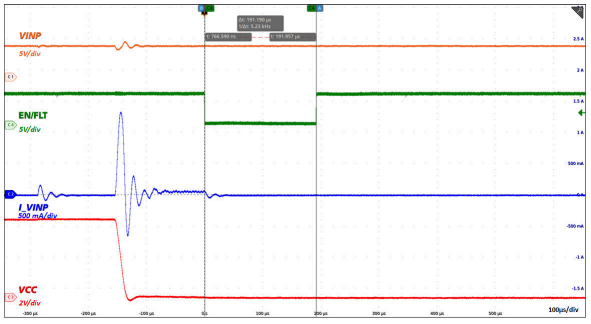

Figure 6-16. Output Short Circuit Operation: VINP = 5.0V

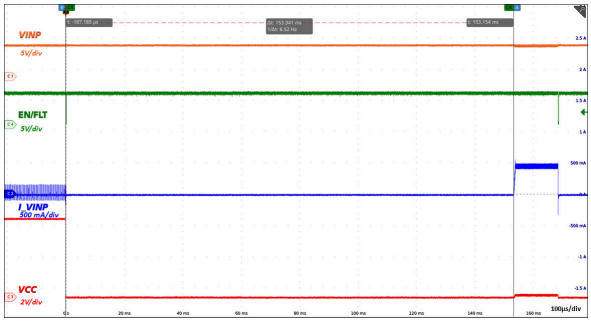

Figure 6-17. Auto-Restart Operation Under Short Circuit Output: VINP = 5.0V

7 Detailed Description

7.1 Overview

The UCC33420 device integrates a high-efficiency, low-emissions isolated DC/DC converter. Requiring minimum passive components to form a completely functional DC/DC power module, the device can deliver a maxiumum power of 1.5W across a 3kV$_{RMS}$ basic isolation barrier over a wide range of operating temperatures in a low profile, high power density VSON - 12-pin package.

The easy-to-use feature, low profile and high power density promotes this device for size limited, cost sensitive systems with a minimum design effort replacing bulky and expensive transformer based designs.

The integrated DC/DC converter uses switched mode operation and proprietary circuit techniques to reduce power losses and boost efficiency across all loading conditions. Specialized control mechanisms, clocking schemes, and the use of an on-chip transformer provide high efficiency and low EMI emissions.

The VINP supply is provided to the primary power controller that switches the power stage connected to the integrated transformer. Power is transferred to the secondary side, rectified, and regulated using a fast hysteretic burst mode control scheme that monitors VCC and ensures it is kept within the hysteresis band under normal and transient loading events while maintaining efficient operation across all loading conditions. The VCC is regulated to 5.0V or to 5.5V by SEL pin connection to have enough headroom for a post regulator LDO for tighter regulation or lower output ripple requirement applications.

The device has an enable pin to turn the device on or off depending on the system requirement. Pulling enable pin low will reduce the quiescent current significantly if the system wants to operate in a low power consumption mode. The enable pin can also be used as a fault reporting pin, when connected to 18kΩ, the pin will be pulled low for 200µs for any fault shutdown of the device. The device has a soft-start mechanism for a smooth and fast VCC ramp up with minimum input inrush current to avoid oversizing front-end power supplies powering the device's input.

7.2 Functional Block Diagram

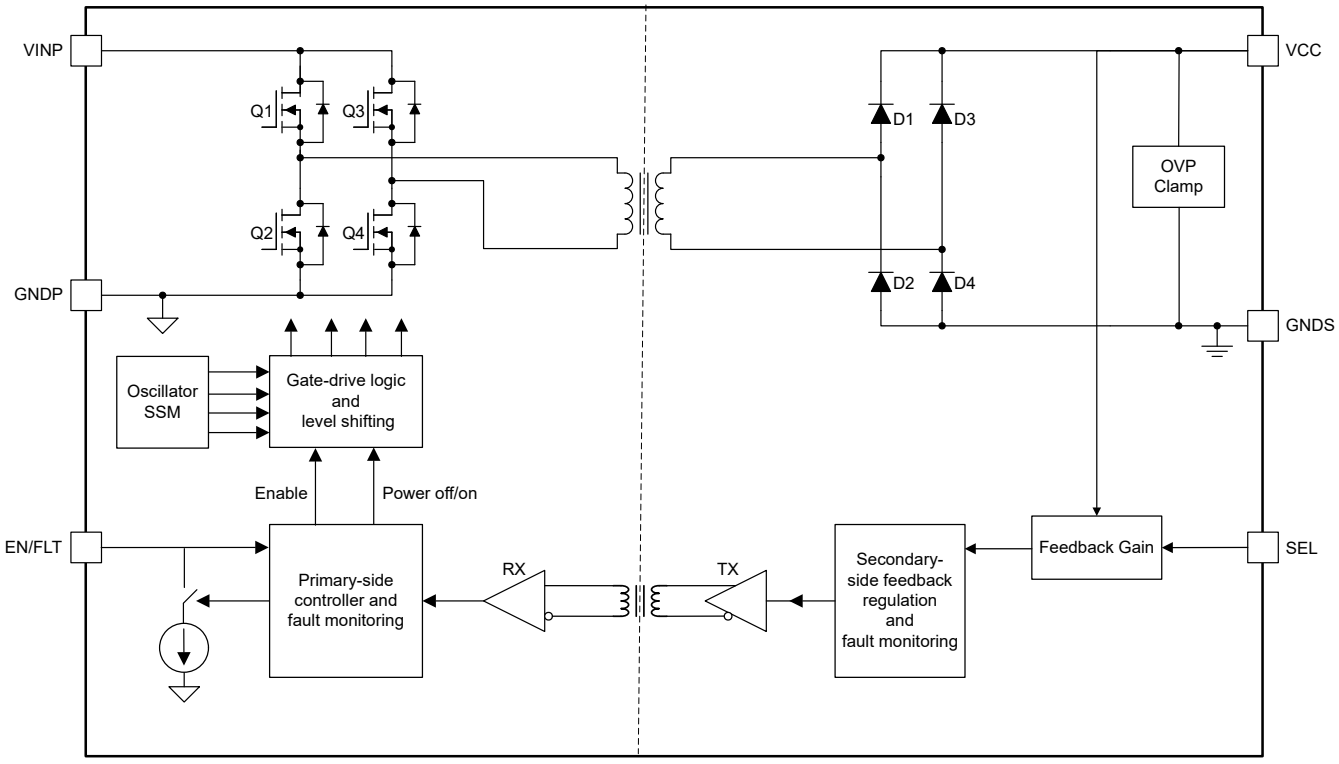

Copyright © 2025 Texas Instruments Incorporated

7.3 Feature Description

7.3.1 Enable and Disable

Forcing EN/FLT pin low disables the device, which greatly reduces the VINP power consumption. Pull the EN/FLT pin high to enable normal device functionality. The EN/FLT pin has a weak internal pull-down resistor so it is not recommended to leave this pin floating in noisy systems.

7.3.2 Output Voltage Soft-Start

The UCC33420 has soft-start mechanism that ensures a smooth and fast soft-start operation with minimum input inrush current. The output voltage Soft-Start diagram is shown in Figure 7-1. After VINP > $V_{VINP_UVLO_R}$ and EN/FLT is pulled high, the soft-start sequence starts with a primary duty cycle open loop control. The power stage operates with a fixed burst frequency with an incremental increasing duty cycle starting at 6.5%. The rate of change of the duty cycle is pre-programmed in the part to reduce the input inrush current while building the output voltage VCC. The primary side limits the maximum duty cycle to 62.5% during this phase till the secondary side VCC voltage passes V_{VCC_UVLO} = 2.7V threshold before releasing this duty cycle limit. This limit will ensure minimum input current in case the device starts on a short circuit and the VCC is not building up.

The soft-start time will vary depending on the output capacitors, input voltage and loading conditions. The UCC33420 has a soft-start timeout feature by which the VCC output voltage state is monitored during soft-start. In certain conditions, the VCC might not reach steady-state regulation threshold due to short circuit on the output voltage as shown in Figure 7-2, heavy loading conditions above recommended operating conditions or higher output capacitor values as shown in Figure 7-3. In these conditions, if the soft-start timeout duration of 16ms expires without the VCC reaching steady-state regulation, the part will shutdown and EN/FLT pin will be pulled low for 200µs to report the fault condition. An auto-restart timer will start afterwards, the part will attempt to restart after that timer expires. More details regarding fault reporting and auto-restart can be found in Fault Reporting and Auto-Restart. If the same conditions continue to exist the same cycle will repeat again as shown in Figure 7-2 and Figure 7-3 below.

Copyright © 2025 Texas Instruments Incorporated

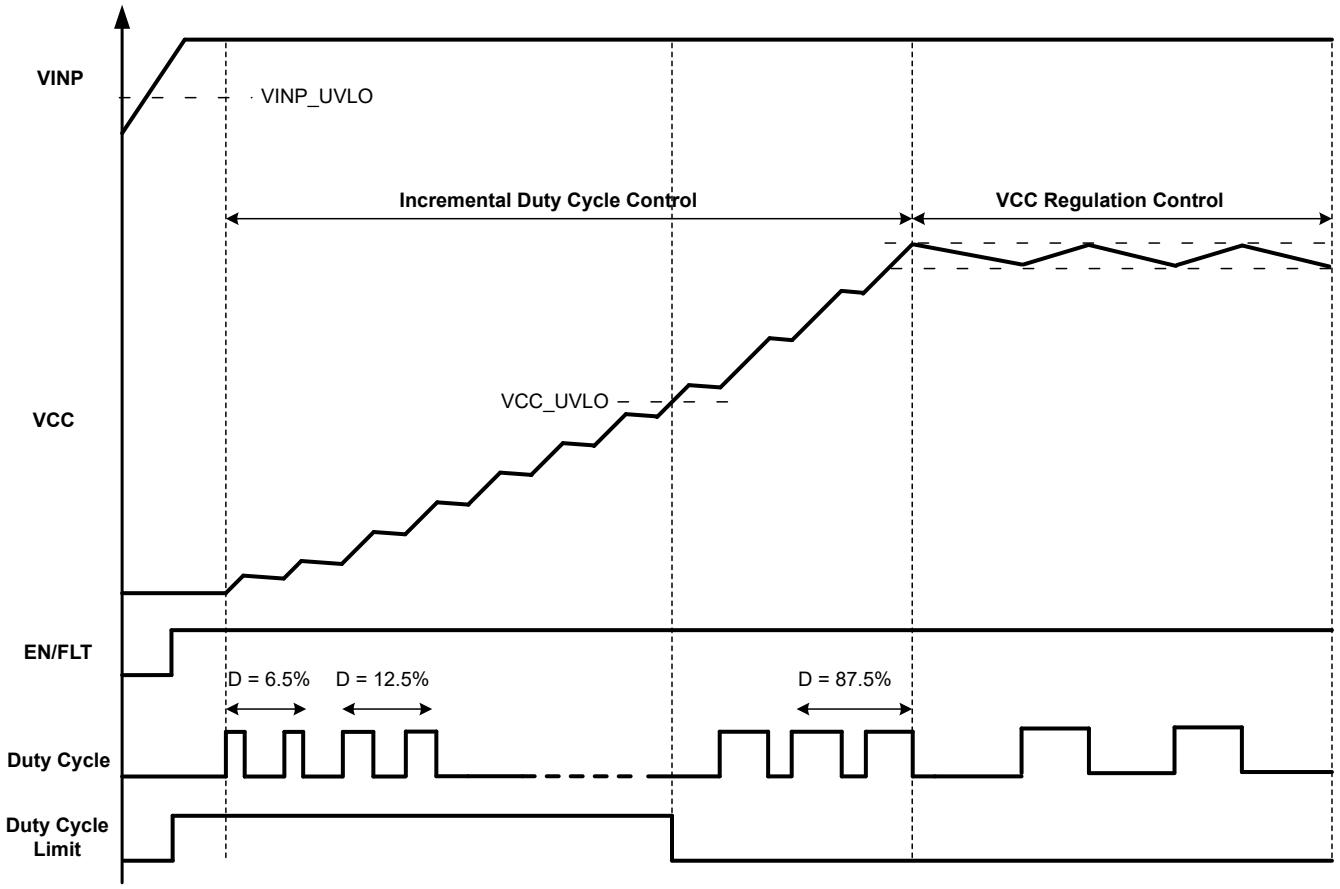

Figure 7-1. Output Voltage Soft-Start Diagram

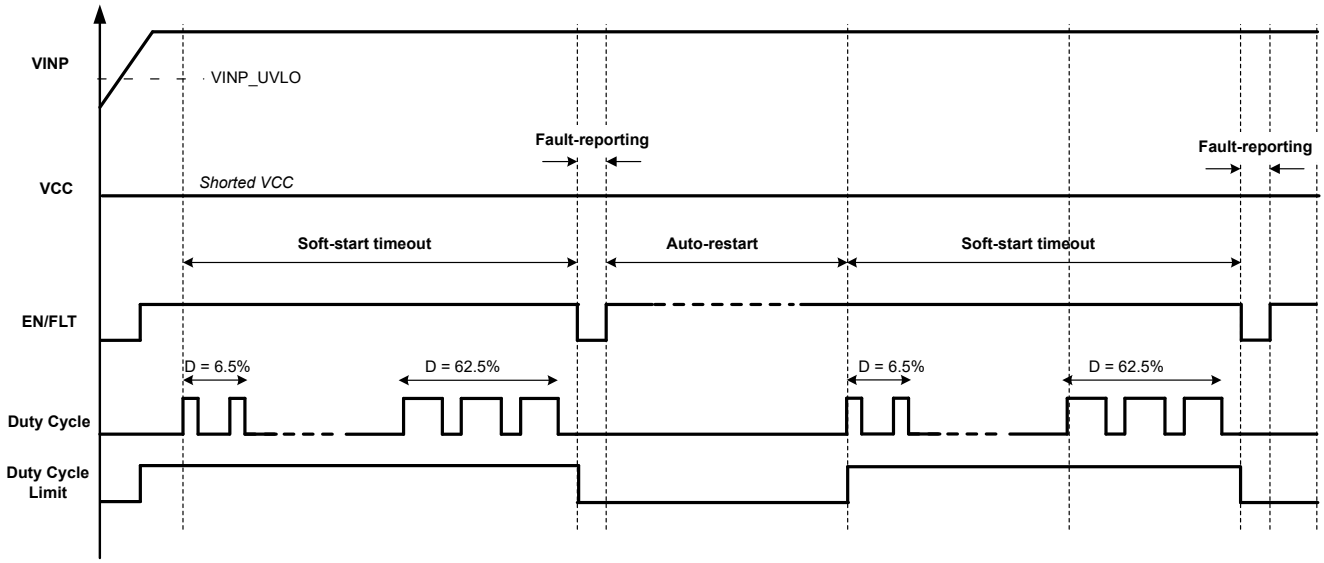

Figure 7-2. Soft-Start Under Short-Circuit Output Diagram

Copyright © 2025 Texas Instruments Incorporated

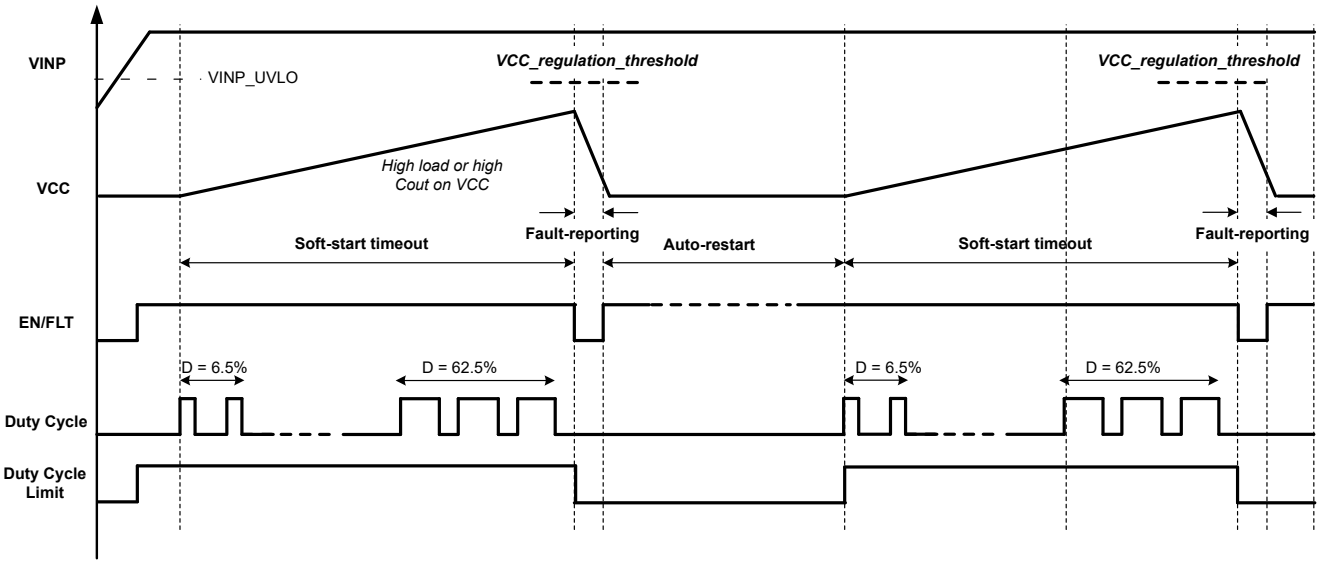

Figure 7-3. Soft-Start Under High Load or High Output Capacitor Conditions Diagram

7.3.3 Output Voltage Steady-State Regulation

The UCC33420 uses hysteretic control to regulate the output voltage between upper and lower bands as shown in Figure 7-4. The regulation block on the secondary side senses the regulated output voltage and sends a feedback signal to the primary side through the inductive communication channel to turn the primary power stage On or Off to maintain the regulated output whithin the hysteresis bands. During steady-state regulation, the burst frequency will change according to the output capacitors and loading conditions. The burst frequency will be highest at higher loading conditions and lowest at light loading conditions by which light load efficiency improvments can be achieved.

The Burst-On duration (t_{ON}) will increase with heavy loading conditions or higher output capacitor. The UCC33420 will enter an overpower protection mode if the Burst-on duration exceeds t_{ON-MAX} typical value of 13µs as shown in Figure 7-5. In this condition, as the VCC hasn't reached the upper hysteresis threshold, the device will turn-on the power stage again after minimum Burst-off duration of $t_{OFF-MIN}$ typical value of 1.5µs. This will repeat as the heavy load condition remains resulting in higher peak-to-peak VCC steady state ripple or lower VCC regulation voltage. The UCC3342x_CALC can help the system designer appropriately select the output capacitor for the targeted maximum load and input voltage range conditions to avoid triggering this condition.

The UCC33420 can program the VCC_REG voltage accoring to the SEL pin connection. The SEL pin voltage is monitored during soft-start sequence when VCC < V_{VCC_UVLO} threshold. The output voltage is then programmed to 5.0V with SEL = VCC or to 5.5V with SEL = GNDS. Note that after this initial monitoring, the SEL pin no longer affects the VCC output level. In order to change the output mode selection, either the EN/FLT pin must be toggled or the VINP power supply must be cycled off and back on.

Copyright © 2025 Texas Instruments Incorporated

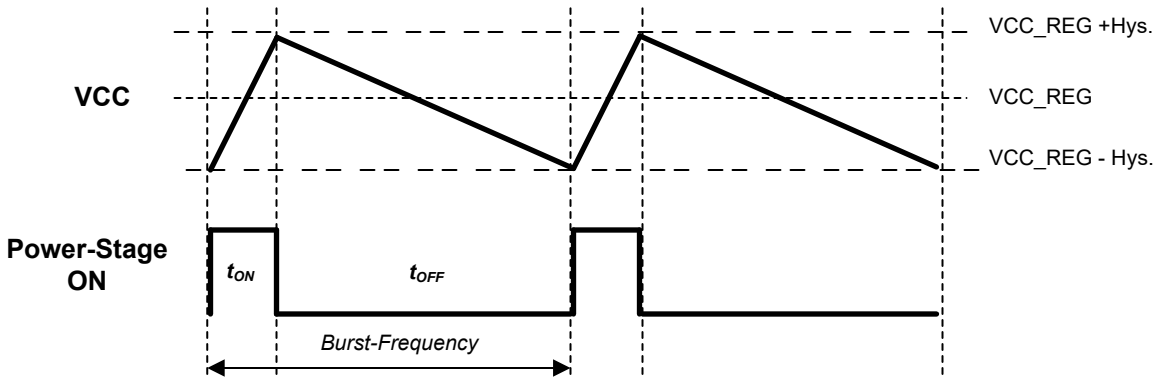

Figure 7-4. Output Voltage Hysteresis Mode Control

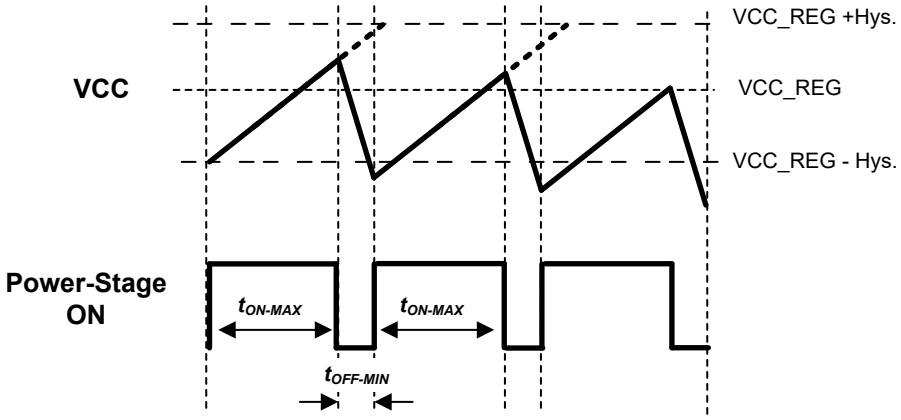

Figure 7-5. Overpower Protection Condition

7.3.4 Protection Features

The UCC33420 is equipped with full feature of protection functions including input under-voltage lockout, input over-voltage lockout, output under-voltage protection and over-temperature protection. In addition, the device has a fault reporting mechanism that can be utilized on the system level to report faulty conditions of the device that caused a shutdown. Under certain faulty conditions the device will shutdown and attempt an auto-restart after defined duration.

7.3.4.1 Input Under-Voltage and Over-Voltage Lockout

The UCC33420 can operate at input voltage range from 4.5V to 5.5V. If the VINP < $V_{VINP_UVLO_F}$ or VINP > $V_{VINP_OVLO_R}$ conditions occured, the converter will stop switching and part will shutdown. Once the VINP gets back in normal operation range , VINP > $V_{VINP_UVLO_R}$ or VINP < $V_{VINP_OVLO_F}$. The part will resume switching immediately without waiting for the auto-restart timer.

7.3.4.2 Output Under-Voltage Protection

The UCC33420 has under voltage protection feature to protect the part when overload condition occurs. If an overload or a short circuit occurs at VCC such that VCC < 0.9 ×VCC condition occurs, the converter will go into the duty cycle limit mode as in the soft-start operation then will shutdown after a certain deglitch time. The deglitch time is added to accommodate for any instantaneous overloading or short circuit conditions that might be removed quickly and normal operation can resume. Once the part shuts down, the part will attempt an auto-restart after 160ms. If the fault condition remains, the part will shutdown again and attempt another auto-restart.

Copyright © 2025 Texas Instruments Incorporated

7.3.4.3 Output Over-Voltage Protection

The UCC33420 has over voltage protection feature to protect the load against over-voltage conditions during severe transient events causing large overshoots on the output voltage. If the VCC voltage rise above $V_{VCC_OVP_R}$ threshold, an OV_CLAMP circuit will ensure the output voltage remains within absolute maximum operating conditions. The converter will go into the duty cycle limit mode as in the soft-start operation then will shutdown after a certain deglitch time. Once the part shuts down, the part will attempt an auto-restart after 160ms. If the fault condition remains, the part will shutdown again and attempt another auto-restart.

7.3.4.4 Over-Temperature Protection

The UCC33420 integrates the primary-side, secondary-side power stages, as well as the isolation transformer. The power loss caused by the power conversion causes the module temperature higher than the ambient temperature. To ensure the safe operation of the power module, the device is equipped with over-temperature protection. Both the primary-side power stage, and the secondary-side power stage temperatures are sensed and compared with the over-temperature protection threshold. If the primary-side power stage temperature becomes higher TSD_{P_R}, or the secondary-side power stage temperature becomes higher than TSD_{S_R} , the module enters over-temperature protection mode. The module stops switching after a defined deglitch time, report the fault and attempt an auto-restart after 160ms.

7.3.4.5 Fault Reporting and Auto-Restart

The UCC33420 has a fault reporting mechanism that can alert a system level MCU or monitoring circuitry of faulty conditions on the device that resulted in a shutdown. If an input over-voltage, over-temperature or output under-voltage protection faults occur. The primary-side controller and fault monitoring system will enable a current source that will sink I_{Fault} current for t_{Fault} duration. If a resistor >18kΩ is connected between the MCU and the EN/FLT pin, the V_{FLT} will be pulled low for the same t_{Fault} duration whenever one of the abovementioned faults occur that resulted in a shutdown of the device as shown in Figure 7-6. If the fault reporting mechanism is not required on the system, the EN/FLT pin can be connected directly to the enable source voltage without the 18kΩ resistor.

The device has an auto-restart feature that occurs after the device is shutdown when output under-voltage or over-temperature faults occur. After the t_{Fault} time expires, a 160ms timer will start and the part will attempt a new soft-start sequence as shown in Figure 7-7. If the fault has been removed, the VCC will soft-start to regulation successfully. If the fault remains, the part will shutdown again and report the fault. The device can continuously operate safely in hiccup mode as long as the fault occurs.

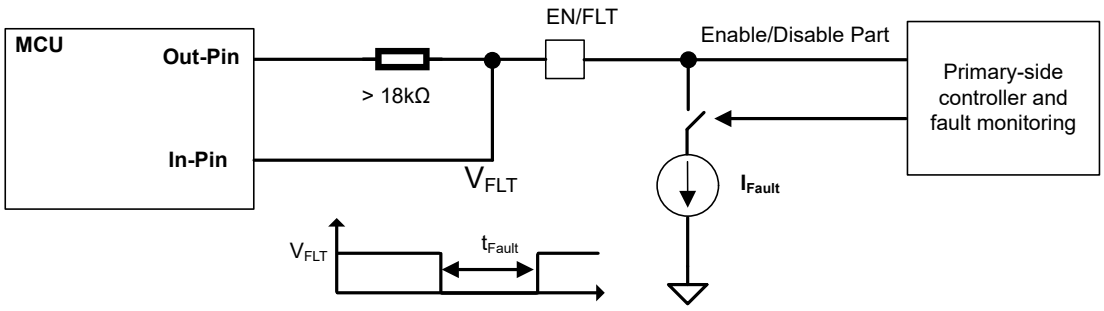

Figure 7-6. Fault Reporting Mechanism

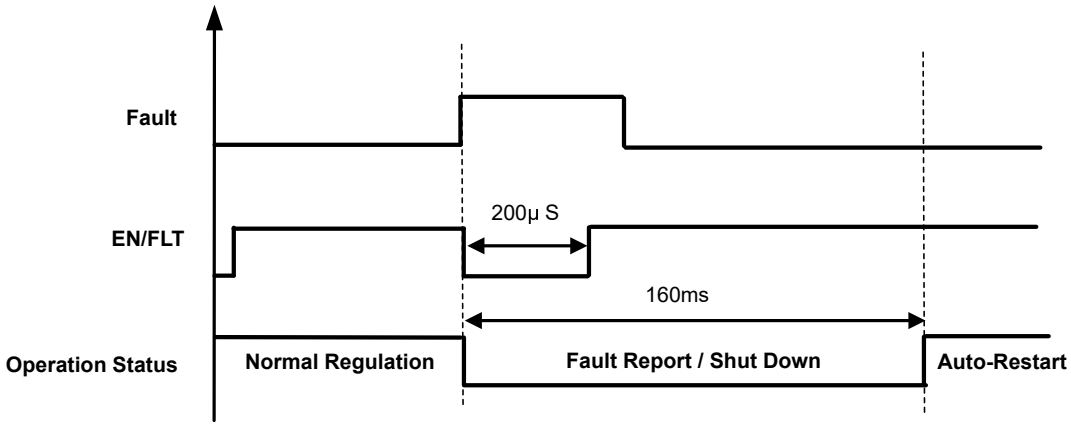

Figure 7-7. Auto-Restart Operation

7.3.5 VCC Load Recommended Operating Area

Figure 7-8 depicts the device VCC regulation behavior across the output load range, including when the output is overloaded. For proper device operation, ensure that the device VCC output load does not exceed the maximum output current I_{OUT_MAX}. If the UCC33420 is loaded beyond the recommended operating area, the VCC will drop and once it goes below the VCC_UVP threshold, the part enters a power limiting mode to avoid stressing the device till power stage stop switching and shutdown.

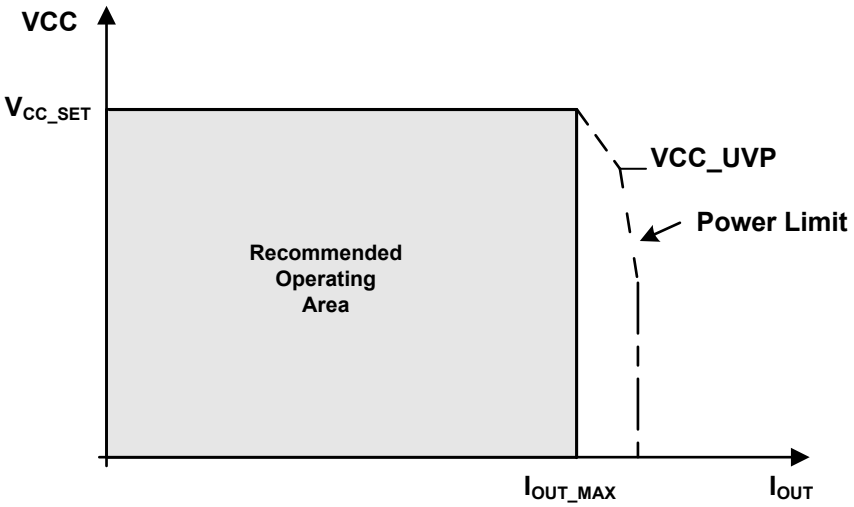

Figure 7-8. VCC Load Recommended Operating Area Description

7.3.6 Electromagnetic Compatibility (EMC) Considerations

UCC33420 devices use adaptive spread spectrum modulation (SSM) algorithm for the internal oscillator to reduce the noise emmissions from the device. The adaptive SSM algorithm ensures a full switching frequency span between two bands during each burst cycle regardless of the loading conditions to ensure similar impact of SSM at different loading conditions. In addition, the UCC33420 uses advanced internal layout scheme to minimize radiated emissions at the system level.

Many applications in harsh industrial environment are sensitive to disturbances such as electrostatic discharge (ESD), electrical fast transient (EFT), surge and electromagnetic emissions. These electromagnetic disturbances are regulated by international standards such as IEC 61000-4-x , CISPR-32 and CISPR-25. Although system-level performance and reliability depends, to a large extent, on the application board design and layout, the device incorporates many chip-level design improvements for overall system robustness.

Copyright © 2025 Texas Instruments Incorporated

7.4 Device Functional Modes

Table 7-1 lists the supply functional modes for this device.

Table 7-1. Device Functional Modes

INPUTS		ISOLATED SUPPLY OUTPUT VOLTAGE (VCC) SETPOINT
EN/FLT	SEL	
HIGH	Shorted to VCC	5.0V
HIGH	Shorted to GNDS	5.5V
Low	x	0V
OPEN(1)	OPEN(1)	UNSUPPORTED

(1) The SEL and EN/FLT pins has an internal weak pull-down resistance to ground, but leaving this pin open is not recommended.

Copyright © 2025 Texas Instruments Incorporated

8 Application and Implementation

Note

Information in the following applications sections is not part of the TI component specification, and TI does not warrant its accuracy or completeness. TI's customers are responsible for determining suitability of components for their purposes, as well as validating and testing their design implementation to confirm system functionality.

8.1 Application Information

The UCC33420 device is suitable for applications that have limited board space and desire more integration. This device is also suitable for very high voltage applications, where power transformers meeting the required isolation specifications are bulky and expensive.

8.2 Typical Application

Typical Application shows the schematic for the UCC33420 device supplying an isolated load.

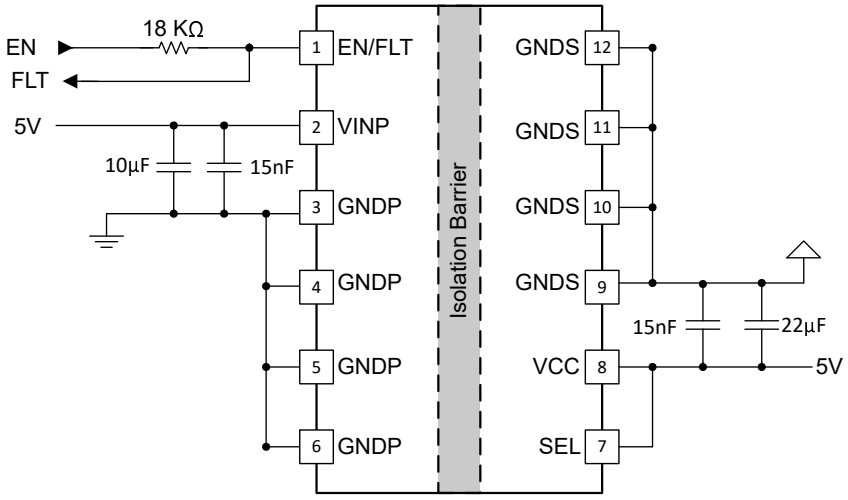

Figure 8-1. Typical Application

8.2.1 Design Requirements

To design using UCC33420, a few simple design considerations must be evaluated. Table 8-1 shows some recommended values for a typical application. See Section 8.3 and Section 8.4 sections to review other key design considerations for the UCC33420.

Table 8-1. Design Parameters

PARAMETER	RECOMMENDED VALUE
Input supply voltage, VINP	4.5V to 5.5V
First Decoupling capacitance between VINP and GNDP	15nF, 50V, ± 10%, X7R
Second Decoupling capacitance between VINP and GNDP	10µF, 10V, X7R
First Decoupling capacitance between VCC and GNDS	15nF, 50V, ± 10%, X7R
Second Decoupling capacitance between VCC and GNDS	22µF, 10V, X7R
EN/FLT pin resistor for fault reporting	18kΩ

Copyright © 2025 Texas Instruments Incorporated

8.2.2 Detailed Design Procedure

The UCC33420 design procedure is very simple, the device requires two decoupling capacitors connected between VINP and GNDP pins for the input supply, and two decoupling capacitors for the isolated output supply placed between VCC and GNDS pins to form a completely functinoal DC/DC converter.

A low ESR, ESL ceramic capacitors are recommended to be connected close to the device pins. It should be noted that the effective burst frequency would be impacted by the selected VCC output capacitor

8.3 Power Supply Recommendations

The recommended input supply voltage (VINP) for the UCC33420 is between 4.5V and 5.5V. To help ensure reliable operation, adequate decoupling capacitors must be located as close to supply pins as possible. Place local bypass capacitors between the VINP and GNDP pins at the input, and between VCC and GNDS at the isolated output supply. The input supply must have an appropriate current rating to support output load required by the end application.

8.4 Layout

8.4.1 Layout Guidelines

The UCC33420 integrated isolated power solution simplifies system design and reduces board area usage. Proper PCB layout is important in order to achieve optimum performance. Here is a list of recommendations:

- Place decoupling capacitors as close as possible to the device pins. For the input supply, place 0402 and 0805 ceramic capacitor between pin 2 (VINP) and pins 3, 4, 5 and 6 (GNDP). For the isolated output supply, place 0402 and 0805 ceramaic capacitor between pin 8 (VCC) and pins 9, 10, 11 and 12 (GNDS). This location is of particular importance to the input decoupling capacitor, because this capacitor supplies the transient current associated with the fast switching waveforms of the power drive circuits.
- Because the device does not have a thermal pad for heat-sinking, the device dissipates heat through the respective GND pins. Ensure that enough copper (preferably a connection to the ground plane) is present on all GNDP and GNDS pins for best heat-sinking. Placing vias close to the device pins and away from the high frequency path between the ceramic capacitors and the device pins is essential for better thermal performance.
- If space and layer count allow, it is also recommended to connect the VINP, GNDP, VCC and GNDS pins to internal ground or power planes through multiple vias of adequate size. Alternatively, make traces for these nets as wide as possible to minimize losses.
- Pay close attention to the spacing between primary ground plane (GNDP) and secondary ground plane (GNDS) on the PCB outer layers. The effective creepage and or clearance of the system reduces if the two ground planes have a lower spacing than that of the device package.
- To ensure isolation performance between the primary and secondary side, avoid placing any PCB traces or copper below the UCC33420 device on the outer copper layers.

Copyright © 2025 Texas Instruments Incorporated

8.4.2 Layout Example

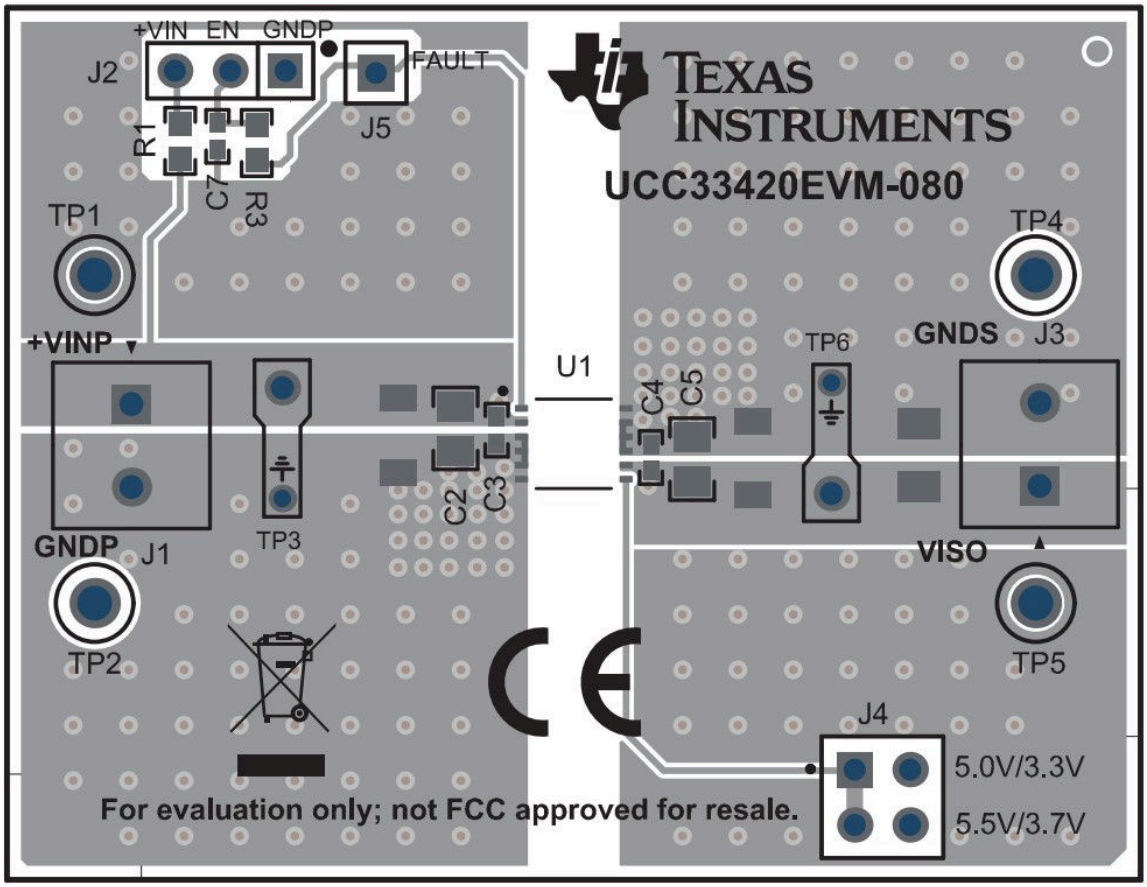

Figure 8-2. Layout Example

Copyright © 2025 Texas Instruments Incorporated

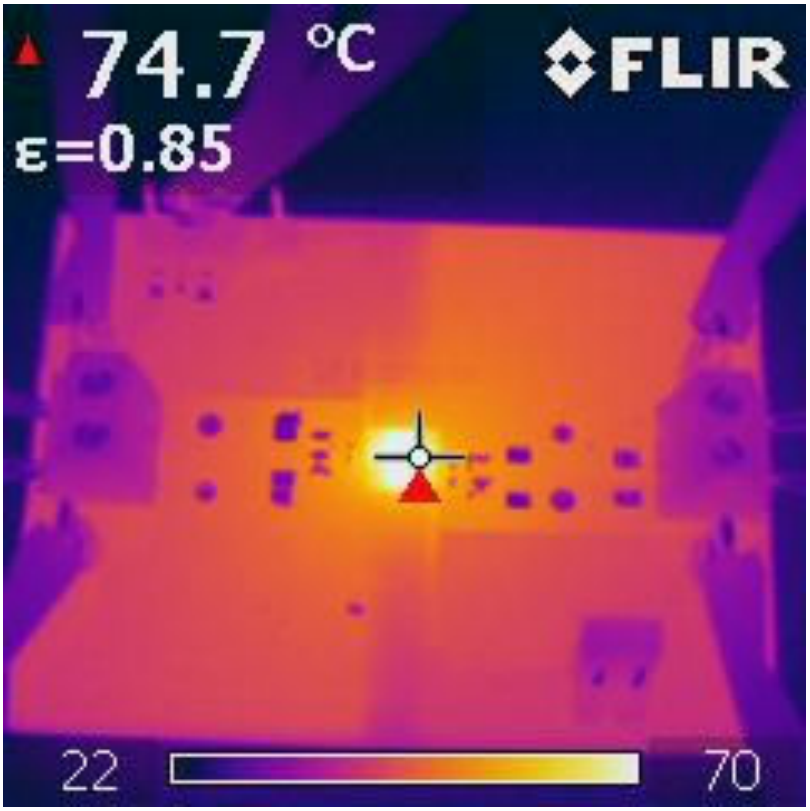

Figure 8-3. UCC33420 Thermal Image: VINP = 5.0V, VCC = 5.0V, P_{Out}=1.5W

9 Device and Documentation Support

9.1 Device Support

9.1.1 Third-Party Products Disclaimer

TI'S PUBLICATION OF INFORMATION REGARDING THIRD-PARTY PRODUCTS OR SERVICES DOES NOT CONSTITUTE AN ENDORSEMENT REGARDING THE SUITABILITY OF SUCH PRODUCTS OR SERVICES OR A WARRANTY, REPRESENTATION OR ENDORSEMENT OF SUCH PRODUCTS OR SERVICES, EITHER ALONE OR IN COMBINATION WITH ANY TI PRODUCT OR SERVICE.

9.2 Documentation Support

9.2.1 Related Documentation

For related documentation see the following:

- Texas Instruments, *UCC33420EVM-080 Evaluation Module for Automotive and Industrial Applications User's Guide*
- Texas Instruments, UCC33420 Simplis Model ,
- Texas Instruments, UCC33420 Soft-start rise time and burst-on duration calculator
- Texas Instruments, Isolation Glossary

9.3 Receiving Notification of Documentation Updates

To receive notification of documentation updates, navigate to the device product folder on ti.com. Click on *Notifications* to register and receive a weekly digest of any product information that has changed. For change details, review the revision history included in any revised document.

9.4 Support Resources

TI E2E™ support forums are an engineer's go-to source for fast, verified answers and design help — straight from the experts. Search existing answers or ask your own question to get the quick design help you need.

Linked content is provided "AS IS" by the respective contributors. They do not constitute TI specifications and do not necessarily reflect TI's views; see TI's Terms of Use.

9.5 Trademarks

TI E2E™ is a trademark of Texas Instruments.
All trademarks are the property of their respective owners.

9.6 Electrostatic Discharge Caution



This integrated circuit can be damaged by ESD. Texas Instruments recommends that all integrated circuits be handled with appropriate precautions. Failure to observe proper handling and installation procedures can cause damage.

ESD damage can range from subtle performance degradation to complete device failure. Precision integrated circuits may be more susceptible to damage because very small parametric changes could cause the device not to meet its published specifications.

9.7 Glossary

TI Glossary	This glossary lists and explains terms, acronyms, and definitions.

Copyright © 2025 Texas Instruments Incorporated

10 Revision History

NOTE: Page numbers for previous revisions may differ from page numbers in the current version.

Changes from Revision D (March 2024) to Revision E (January 2025)	Page
• Updated marketing status from Advance Information to Production Data	1

Copyright © 2025 Texas Instruments Incorporated

11 Mechanical and Packaging Information

The following pages include mechanical, packaging, and orderable information. This information is the most current data available for the designated devices. This data is subject to change without notice and revision of this document. For browser-based versions of this data sheet, refer to the left-hand navigation.

Copyright © 2025 Texas Instruments Incorporated

PACKAGING INFORMATION

Orderable part number	Status (1)	Material type (2)	Package | Pins	Package qty | Carrier	RoHS (3)	Lead finish/ Ball material (4)	MSL rating/ Peak reflow (5)	Op temp (°C)	Part marking (6)
UCC33420RAQR	Active	Production	VSON-FCRLF (RAQ) | 12	3000 | LARGE T&R	Yes	NIPDAU	Level-3-260C-168 HR	-40 to 125	U33420
UCC33420RAQR.A	Active	Production	VSON-FCRLF (RAQ) | 12	3000 | LARGE T&R	Yes	NIPDAU	Level-3-260C-168 HR	-40 to 125	U33420

(1) **Status:** For more details on status, see our product life cycle.

(2) **Material type:** When designated, preproduction parts are prototypes/experimental devices, and are not yet approved or released for full production. Testing and final process, including without limitation quality assurance, reliability performance testing, and/or process qualification, may not yet be complete, and this item is subject to further changes or possible discontinuation. If available for ordering, purchases will be subject to an additional waiver at checkout, and are intended for early internal evaluation purposes only. These items are sold without warranties of any kind.

(3) **RoHS values:** Yes, No, RoHS Exempt. See the TI RoHS Statement for additional information and value definition.

(4) **Lead finish/Ball material:** Parts may have multiple material finish options. Finish options are separated by a vertical ruled line. Lead finish/Ball material values may wrap to two lines if the finish value exceeds the maximum column width.

(5) **MSL rating/Peak reflow:** The moisture sensitivity level ratings and peak solder (reflow) temperatures. In the event that a part has multiple moisture sensitivity ratings, only the lowest level per JEDEC standards is shown. Refer to the shipping label for the actual reflow temperature that will be used to mount the part to the printed circuit board.

(6) **Part marking:** There may be an additional marking, which relates to the logo, the lot trace code information, or the environmental category of the part.

Multiple part markings will be inside parentheses. Only one part marking contained in parentheses and separated by a "~" will appear on a part. If a line is indented then it is a continuation of the previous line and the two combined represent the entire part marking for that device.

Important Information and Disclaimer: The information provided on this page represents TI's knowledge and belief as of the date that it is provided. TI bases its knowledge and belief on information provided by third parties, and makes no representation or warranty as to the accuracy of such information. Efforts are underway to better integrate information from third parties. TI has taken and continues to take reasonable steps to provide representative and accurate information but may not have conducted destructive testing or chemical analysis on incoming materials and chemicals. TI and TI suppliers consider certain information to be proprietary, and thus CAS numbers and other limited information may not be available for release.

In no event shall TI's liability arising out of such information exceed the total purchase price of the TI part(s) at issue in this document sold by TI to Customer on an annual basis.

OTHER QUALIFIED VERSIONS OF UCC33420 :

- Automotive : UCC33420-Q1

NOTE: Qualified Version Definitions:

- Automotive - Q100 devices qualified for high-reliability automotive applications targeting zero defects

TAPE AND REEL INFORMATION

REEL DIMENSIONS

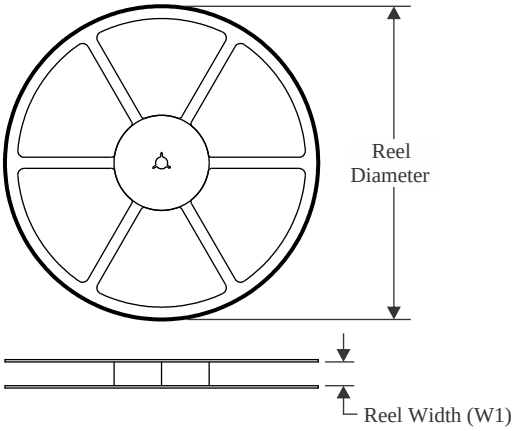

TAPE DIMENSIONS

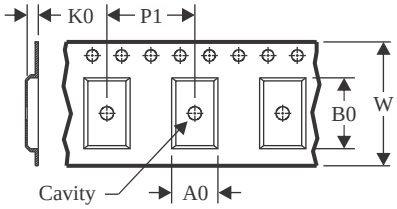

A0	Dimension designed to accommodate the component width
B0	Dimension designed to accommodate the component length
K0	Dimension designed to accommodate the component thickness
W	Overall width of the carrier tape
P1	Pitch between successive cavity centers

QUADRANT ASSIGNMENTS FOR PIN 1 ORIENTATION IN TAPE

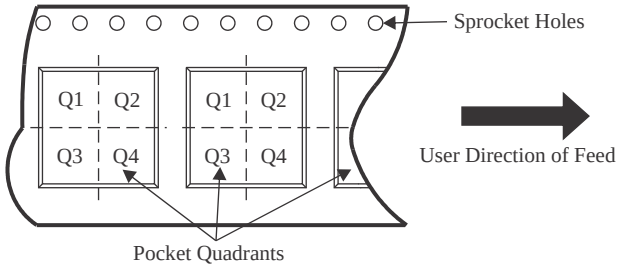

*All dimensions are nominal

Device	Package Type	Package Drawing	Pins	SPQ	Reel Diameter (mm)	Reel Width W1 (mm)	A0 (mm)	B0 (mm)	K0 (mm)	P1 (mm)	W (mm)	Pin1 Quadrant
UCC33420RAQR	VSON-FCRLF	RAQ	12	3000	330.0	12.4	4.3	5.3	1.3	8.0	12.0	Q2

TAPE AND REEL BOX DIMENSIONS

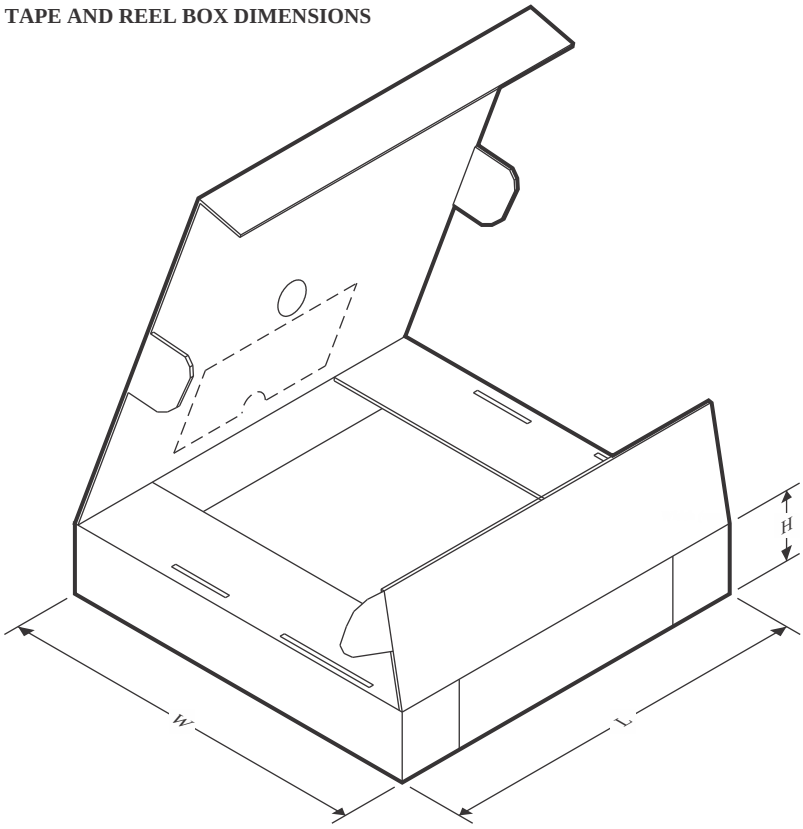

*All dimensions are nominal

Device	Package Type	Package Drawing	Pins	SPQ	Length (mm)	Width (mm)	Height (mm)
UCC33420RAQR	VSON-FCRLF	RAQ	12	3000	350.0	350.0	43.0

GENERIC PACKAGE VIEW

RAQ 12

VSON-FCRLF - 1.05 mm max height

5 x 4, 0.65 mm pitch

PLASTIC SMALL OUTLINE - NO LEAD

This image is a representation of the package family, actual package may vary.
Refer to the product data sheet for package details.

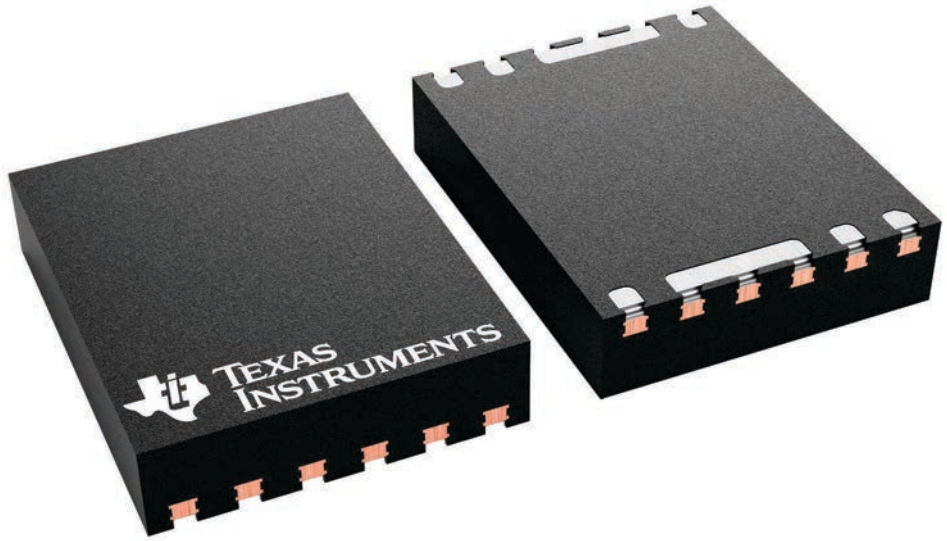

4229417/A

PACKAGE OUTLINE

RAQ0012C



VSON-FCRLF - 1.05 mm max height

PLASTIC SMALL OUTLINE - NO LEAD

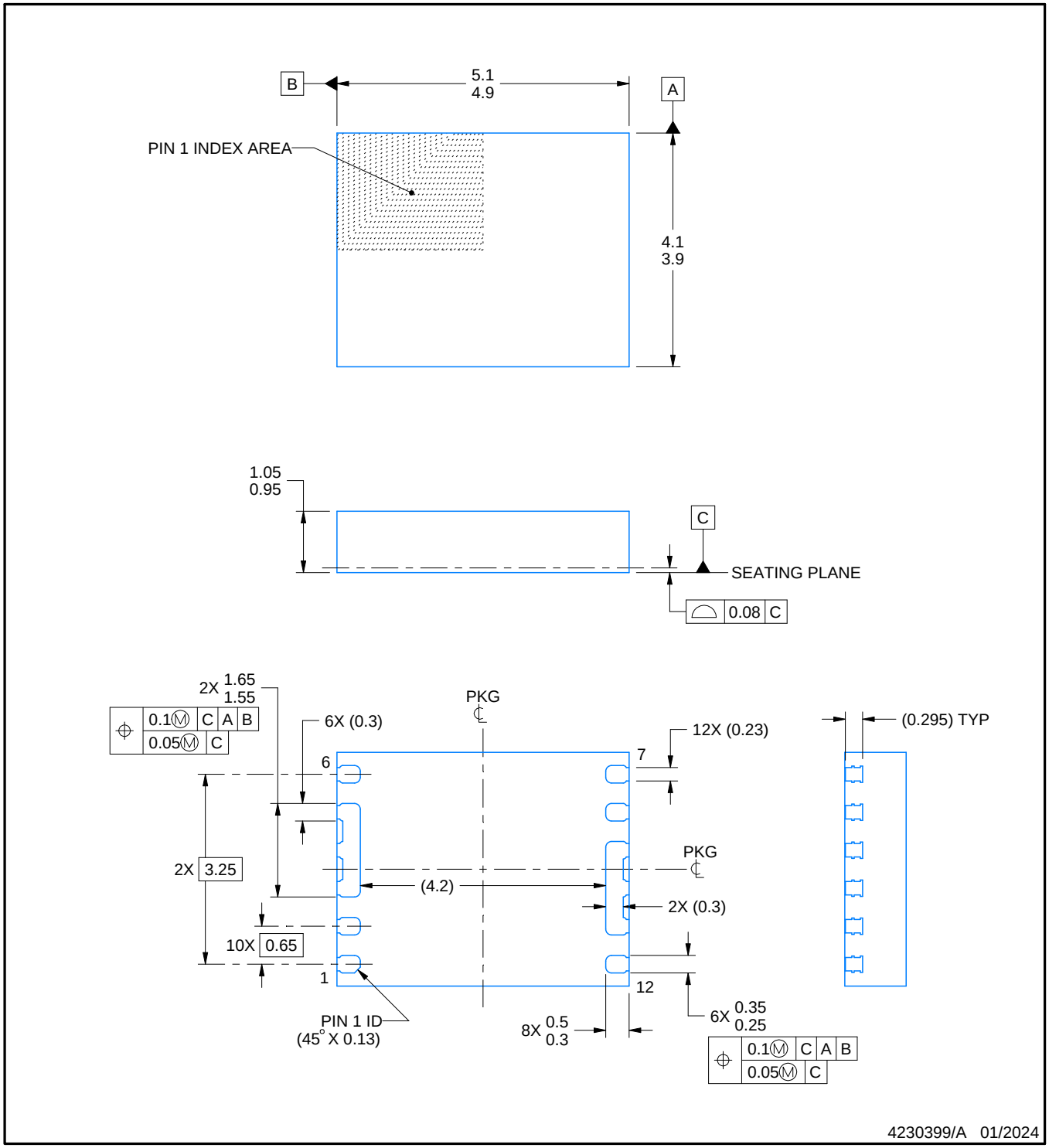

NOTES:

1. All linear dimensions are in millimeters. Any dimensions in parenthesis are for reference only. Dimensioning and tolerancing per ASME Y14.5M.
2. This drawing is subject to change without notice.

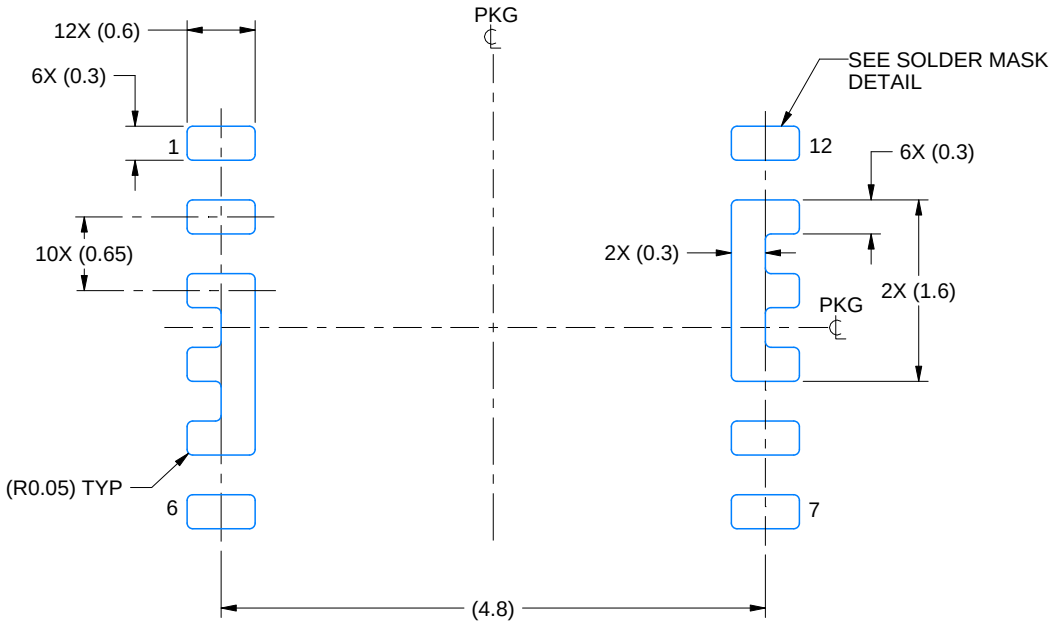

LAND PATTERN EXAMPLE
EXPOSED METAL SHOWN
SCALE: 15X

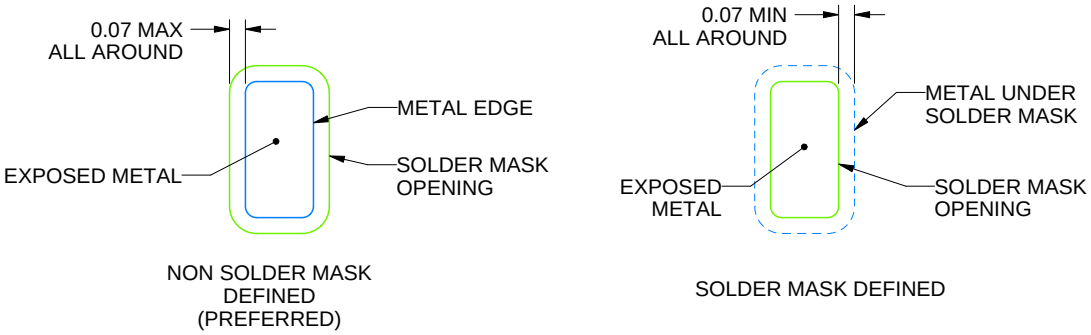

SOLDER MASK DETAILS

4230399/A 01/2024

NOTES: (continued)

3. This package is designed to be soldered to a thermal pad on the board. For more information, see Texas Instruments literature number SLUA271 (www.ti.com/lit/slua271).
4. Vias are optional depending on application, refer to device data sheet. If any vias are implemented, refer to their locations shown on this view. It is recommended that vias under paste be filled, plugged or tented.

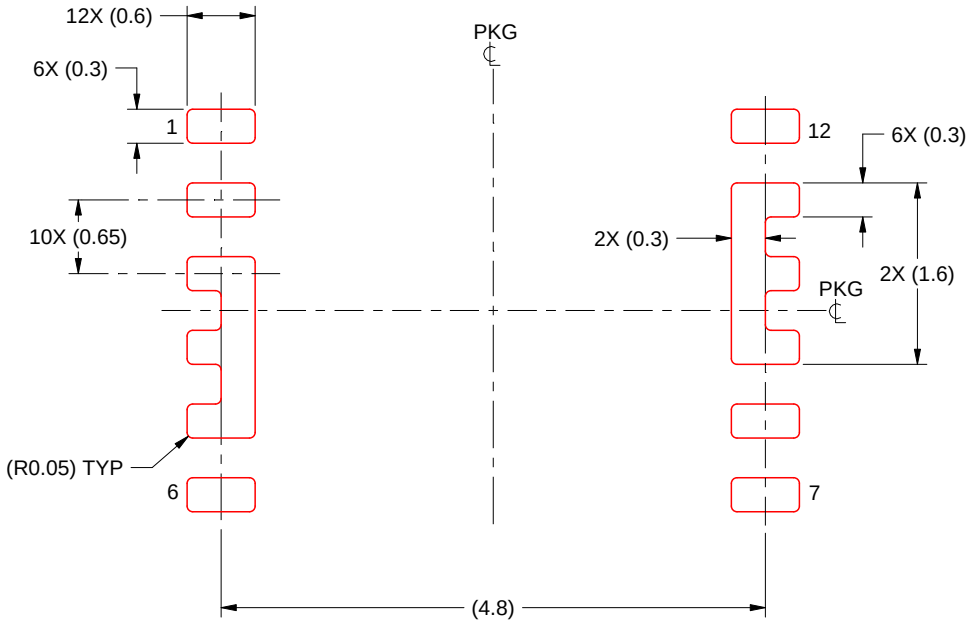

SOLDER PASTE EXAMPLE
BASED ON 0.125 MM THICK STENCIL
SCALE: 15X

4230399/A 01/2024

NOTES: (continued)

5. Laser cutting apertures with trapezoidal walls and rounded corners may offer better paste release. IPC-7525 may have alternate design recommendations.

IMPORTANT NOTICE AND DISCLAIMER

TI PROVIDES TECHNICAL AND RELIABILITY DATA (INCLUDING DATASHEETS), DESIGN RESOURCES (INCLUDING REFERENCE DESIGNS), APPLICATION OR OTHER DESIGN ADVICE, WEB TOOLS, SAFETY INFORMATION, AND OTHER RESOURCES “AS IS” AND WITH ALL FAULTS, AND DISCLAIMS ALL WARRANTIES, EXPRESS AND IMPLIED, INCLUDING WITHOUT LIMITATION ANY IMPLIED WARRANTIES OF MERCHANTABILITY, FITNESS FOR A PARTICULAR PURPOSE OR NON-INFRINGEMENT OF THIRD PARTY INTELLECTUAL PROPERTY RIGHTS.

These resources are intended for skilled developers designing with TI products. You are solely responsible for (1) selecting the appropriate TI products for your application, (2) designing, validating and testing your application, and (3) ensuring your application meets applicable standards, and any other safety, security, regulatory or other requirements.

These resources are subject to change without notice. TI grants you permission to use these resources only for development of an application that uses the TI products described in the resource. Other reproduction and display of these resources is prohibited. No license is granted to any other TI intellectual property right or to any third party intellectual property right. TI disclaims responsibility for, and you fully indemnify TI and its representatives against any claims, damages, costs, losses, and liabilities arising out of your use of these resources.

TI’s products are provided subject to TI’s Terms of Sale, TI’s General Quality Guidelines, or other applicable terms available either on ti.com or provided in conjunction with such TI products. TI’s provision of these resources does not expand or otherwise alter TI’s applicable warranties or warranty disclaimers for TI products. Unless TI explicitly designates a product as custom or customer-specified, TI products are standard, catalog, general purpose devices.

TI objects to and rejects any additional or different terms you may propose.

Copyright © 2026, Texas Instruments Incorporated

Last updated 10/2025

Looking for pricing, stock, or lifecycle information?

Click below to explore more details on WIN SOURCE:

- View UCC33420RAQR on WIN SOURCE
- Texas Instruments Information

Optimize Your Supply Chain with WIN SOURCE Solutions

- Global Sourcing Solution
- Obsolete Management
- Cost Control Management
- Shortage Management
- Alternative Solution
- Excess Inventory Management