XCL237/XCL238 Series

ETR28025-001

HiSAT-COT ® Control 1.5A Inductor Built-in Step-Down “micro DC/DC” Converters

☆Green Operation Compatible

■GENERAL DESCRIPTION

The XCL237/XCL238 series is a synchronous step-down micro DC/DC converter which integrates an inductor and a control IC in one tiny package (3.2mm x 2.5mm, h=1.0mm). An internal coil simplifies the circuit and enables minimization of noise and other operational trouble due to the circuit wiring.

The Output voltage is internally set in a range from 0.8V to 3.6V increments of 0.05V.

HiSAT-COT is a proprietary high-speed transient response technology for DC/DC converter which was minimized output voltage during load fluctuations. It is Ideal for the applications with large instantaneous load fluctuations such as FPGAs and equipment that requires stable output voltage.

(*) HiSAT-COT is a proprietary high-speed transient response technology for DC/DC converter which was developed by Torex. It is Ideal for the LSI's that require high precision and high stability power supply voltage.

■APPLICATIONS

- Communication equipment / modules (Bluetooth/Wi-Fi/GPS etc.)
- Power supply for MCU/FPGA/ASIC (POL power supply)
- Smart phones/Mobile phones
- DSC/Camcorder
- Portable game consoles
- Wearable devices
- Active cable/Active optical cable

■FEATURES

Input Voltage Range	:	2.5V ~ 5.5V
Output Voltage Range	:	0.80V ~ 1.00V (±20mV) 1.05V ~ 3.60V (±2.0%)
Output Current	:	1.5A
Oscillation Frequency	:	3.0MHz
Efficiency		89%(V_{IN}=3.8V,V_{OUT}=1.8V,I_{OUT}=500mA)
Quiescent Current	:	25μA
Control Methods	:	HiSAT-COT Control PWM Control (XCL237) PWM/PFM Auto (XCL238)
Protection Functions	:	Thermal Shutdown Current Limit Short Protection
Functions	:	Soft-Start UVLO C_L Discharge
Input/Output Capacitor	:	Ceramic Capacitor
Operating Ambient Temperature	:	-40℃ ~ 105℃
Packages	:	USP-9B01 (3.2 x 2.5 x 1.0mm)
Environmentally Friendly	:	EU RoHS Compliant, Pb Free

■TYPICAL APPLICATION CIRCUIT

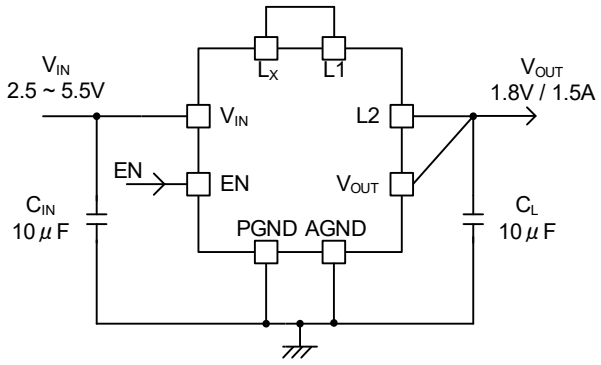

■ TYPICAL PERFORMANCE CHARACTERISTICS

$V_{OUT(T)}$=1.8V

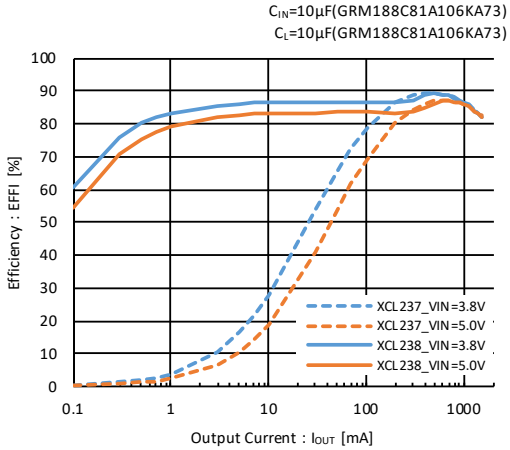

■BLOCK DIAGRAM

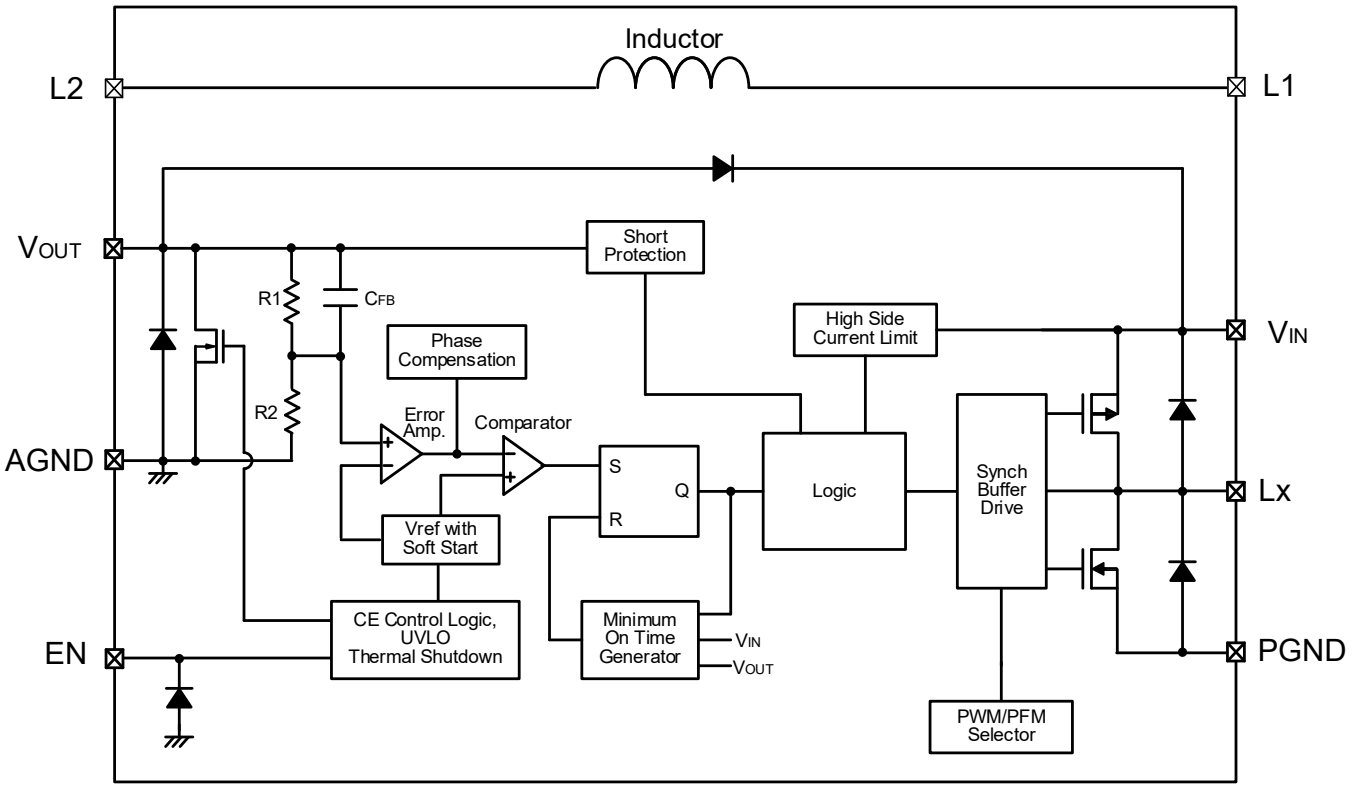

* "PWM/PFM Selector" in the XCL237 series is fixed to PWM control.
"PWM/PFM Selector" in the XCL238 series is fixed to PWM/PFM automatic switching control.
Diodes inside the circuit are ESD protection diodes and parasitic diodes.

■PRODUCT CLASSIFICATION

●Ordering Information

XCL237①②③④⑤⑥−⑦ : PWM control

XCL238①②③④⑤⑥−⑦ : PWM/PFM Automatic switching control

DESIGNATOR	ITEM	SYMBOL	DESCRIPTION
①	Type	B	Refer to Selection Guide
		E	
②③	Output Voltage	08 ~ 36	Output voltage e.g. 1.2V → ②=1, ③=2 1.25V → ②=1, ③=C 0.05V increments : 0.05=A, 0.15=B, 0.25=C, 0.35=D, 0.45=E, 0.55=F, 0.65=H, 0.75=K, 0.85=L, 0.95=M
④	Oscillation Frequency	3	3.0MHz
⑤⑥−⑦(*1)	Package (Order Unit)	D2-G	USP-9B01(*2) (3,000pcs/Reel)

(*1) The “-G” suffix denotes Halogen and Antimony free as well as being fully EU RoHS compliant.
(*2) The USP-9B01 reels are shipped in a moisture-proof packing.

●Selection Guide

FUNCTION	B TYPE	E TYPE
Enable	Yes	
UVLO	Yes	
Soft-Start Time	0.3ms	0.4ms
C_L Discharge	Yes	
Current Limit (Automatic Recovery)	Yes	
Short Protection (Latch Protection)	Yes	
Thermal Shutdown	Yes	

■PIN CONFIGURATION

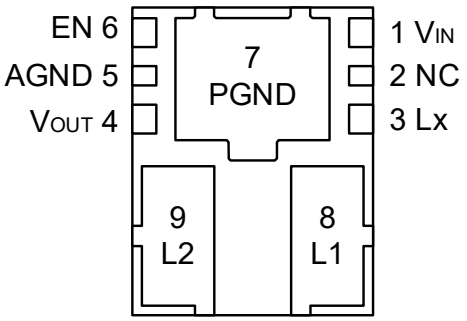

BOTTOM VIEW

* Be sure to short the AGND pin (Pin 5) and PGND pin (Pin 7) when using.

■PIN ASSIGNMENT

PIN NUMBER	PIN NAME	FUNCTIONS
1	V_{IN}	Power Input
2	NC	No Connection
3	Lx	Switching
4	V_{OUT}	Output Voltage Monitor
5	AGND	Analog Ground
6	EN	Enable
7	PGND	Power Ground
8	L1	Inductor Electrodes
9	L2	Inductor Electrodes

■FUNCTION TABLE

PIN NAME	SIGNAL	STATUS
EN	L	Stand-by
	H	Active
	OPEN	Undefined State (*1)

(*1) Please do not leave the EN pin open.

■ABSOLUTE MAXIMUM RATINGS

PARAMETER	SYMBOL	RATINGS	UNITS
V_{IN} Pin Voltage	V_{IN}	-0.3 ~ 6.2	V
L_X Pin Voltage	V_{Lx}	-0.3 ~ V_{IN} + 0.3 or 6.2(*1)	V
V_{OUT} Pin Voltage	V_{OUT}	-0.3 ~ V_{IN} + 0.3 or 4.0 (*2)	V
EN Pin Voltage	V_{EN}	-0.3 ~ 6.2	V
Power Dissipation (Ta=25℃)	Pd	1200 (40mm x 40mm Standard board) (*3)	mW
Junction Temperature	Tj	-40 ~ 125	℃
Storage Temperature	T_{stg}	-55 ~ 125	℃

All voltages are described based on the GND (AGND and PGND) pin.

(*1) The maximum value should be either V_{IN}+0.3V or 6.2V in the lowest voltage.

(*2) The maximum value should be either V_{IN}+0.3V or 4.0V in the lowest voltage.

(*3) The power dissipation figure shown is PCB mounted and is for reference only.
Please refer to PACKAGING INFORMATION for the mounting condition.

■RECOMMENDED OPERATING CONDITIONS

PARAMETER	SYMBOL	MIN.	TYP.	MAX.	UNITS
Input Voltage	V_{IN}	2.5	-	5.5	V
EN Pin Voltage	V_{EN}	0.0	-	5.5	V
Output Current	I_{OUT}	-	-	1.5	A
Operating Ambient Temperature	Topr	-40	-	105	℃
Input Capacitor (Effective Value) (*1)	C_{IN}	3.8	10	1000 (*2)	μF
Output Capacitor (Effective Value) (*1)	C_L	5.8	10	330 (*3)	μF

All voltages are described based on the GND (AGND and PGND) pin.

(*1) Some ceramic capacitors have an effective capacitance that is significantly lower than the nominal value due to the applied DC bias and ambient temperature. For the input / output capacitance of this IC, use an appropriate ceramic capacitor according to the DC bias usage conditions (ambient temperature, input / output voltage) so that the effective capacitance value is equal to or higher than the recommended component.

(*2) If using a large-capacity capacitor such as an electrolytic capacitor or tantalum capacitor as the input capacitance, place a low ESR ceramic capacitor in parallel. If a ceramic capacitor is not placed, high-frequency voltage fluctuations will increase and the IC may malfunction.

(*3) If using a large-capacity capacitor as the output capacitance, the output voltage may not rise during the soft-start time and the short protection function will operate after the soft-start time, causing the IC to latch and stop.

■ELECTRICAL CHARACTERISTICS

●XCL237B /XCL238B

Ta=25℃

PARAMETER	SYMBOL	CONDITIONS		MIN.	TYP.	MAX.	UNITS	CIRCUIT
Output Voltage	V_{OUT}	V_{IN}=$V_{OUT(T)}$+2.0V($V_{OUT(T)}$≦3.5V) or 5.5V($V_{OUT(T)}$>3.5V), V_{OUT}=<E-3>→<E-1> V_{OUT} Voltage When Lx pin is V_{IN} or oscillations		<E-1>	<E-2>	<E-3>	V	③
Operating Voltage Range	V_{IN}			2.5	-	5.5	V	①
Maximum Output Current	I_{OUTMAX}	When connected to external components, V_{IN} =<C-1>		1500	-	-	mA	①
UVLO Detect Voltage	V_{UVLOD}	V_{IN} = 2.5V to 1.2V, V_{OUT} = 0.6V, V_{IN} Voltage when Lx pin changes “H” to "L" level		1.35	1.95	-	V	③
UVLO Release Voltage	V_{UVLOR}	V_{IN} = 1.2V to 2.5V, V_{OUT} = 0.6V, V_{IN} Voltage when Lx pin changes “L” to "H" level		-	2.00	2.48	V	③
Quiescent Current (XCL238)	I_q	V_{OUT} =$V_{OUT(T)}$ ×1.1		-	25	40	μA	②
Quiescent Current (XCL237)	I_q	V_{OUT} =$V_{OUT(T)}$ ×1.1		-	600	1035	μA	②
ON time	t_{ON}	When connected to external components, V_{IN} =V_{EN}=<C-1>, I_{OUT}=1mA		<E-5>	<E-6>	<E-7>	ns	①
Thermal Shutdown	T_{TSD}	-		-	150	-	℃	①
Thermal shutdown Hysteresis	T_{HYS}	-		-	30	-	℃	①
Lx SW ”H” ON Resistance	R_{LXH}	V_{OUT}=0.6V, I_{LX}=100mA		-	0.14	0.28	Ω	④
Lx SW ”L” ON Resistance (*1)	R_{LXL}	V_{IN}=3.6V, V_{OUT}=$V_{OUT(T)}$ × 1.1, I_{LX}=100mA		-	0.10	0.25	Ω	④
Lx SW ”H” Leakage Current	I_{LeakH}	V_{IN}=5.5V, V_{EN}=0V, V_{OUT}=0V, V_{LX}=0V		-	0.0	1.0	μA	⑤
Lx SW ”L” Leakage Current	I_{LeakL}	V_{IN}=5.5V, V_{EN}=0V, V_{OUT}=0V, V_{LX}=5.5V		-	0.0	1.0	μA	⑤
Current Limit (*2)	I_{LIMH}	V_{OUT}=0.6V, I_{Lx} until Lx pin oscillates		2.5 (*1)	3.0	4.5 (*1)	A	⑥
Output Voltage Temperature Characteristics	ΔV_{OUT}/(V_{OUT}・Δtopr)	I_{OUT}=30mA, -40℃≦Topr≦105℃		-	±100	-	ppm/℃	①
EN ”H” Voltage	V_{ENH}	V_{OUT}=0.6V, Applied voltage to V_{EN}, Voltage changes Lx to “H” level	Ta=25℃	1.4	-	5.5	V	③
			Ta=-40~105℃(*1)					
EN ”L” Voltage	V_{ENL}	V_{OUT}=0.6V, Applied voltage to V_{EN}, Voltage changes Lx to “H” level	Ta=25℃	AGND	-	0.3	V	③
			Ta=-40~105℃(*1)					
EN ”H” Current	I_{ENH}	V_{IN}=5.5V, V_{EN}=0V, V_{OUT}=0V		-	0.0	0.1	μA	⑤
EN ”L” Current	I_{ENL}	V_{IN}=5.5V, V_{EN}=5.5V, V_{OUT}=0V		-	0.0	0.1	μA	⑤
Soft-start Time	t_{SS}	V_{EN}=0V→5.0V, V_{OUT}=$V_{OUT(T)}$ × 0.9 After "H" is fed to EN, the time by when clocks are generated at Lx pin.		0.10	0.30	0.60	ms	③
Short Protection Threshold Voltage	V_{SHORT}	Sweeping V_{OUT}, V_{OUT} voltage which Lx becomes “L” level		0.17	0.27	0.38	V	③
C_L Discharge Resistance	R_{DCHG}	V_{EN}=0V, V_{OUT}=4.0V		100	180	300	Ω	⑦
Inductance	L	Test Freq.=1MHz		-	0.5	-	μH	-

$V_{OUT(T)}$: Nominal Voltage

Unless otherwise stated, V_{IN}=5.0V, V_{EN}=5.0V,

"H" level = V_{IN} - 1.2V ~ V_{IN}, "L" level = -0.1V ~ 0.1V

(*1) Design value.

(*2) Current limit denotes the level of detection at peak of Inductor current.

■ELECTRICAL CHARACTERISTICS

●XCL237E/XCL238E

Ta=25℃

PARAMETER	SYMBOL	CONDITIONS		MIN.	TYP.	MAX.	UNITS	CIRCUIT
Output Voltage	V_{OUT}	V_{IN}=$V_{OUT(T)}$+2.0V($V_{OUT(T)}$≦3.5V) or 5.5V($V_{OUT(T)}$>3.5V), V_{OUT}=<E-3>→<E-1> V_{OUT} Voltage When Lx pin is V_{IN} or oscillations		<E-1>	<E-2>	<E-3>	V	③
Operating Voltage Range	V_{IN}			2.5	-	5.5	V	①
Maximum Output Current	I_{OUTMAX}	When connected to external components, V_{IN} =<C-1>		1500	-	-	mA	①
UVLO Detect Voltage	V_{UVLOD}	V_{IN} = 2.5V to 1.2V, V_{OUT} = 0.6V, V_{IN} Voltage when Lx pin changes “H” to "L" level		1.35	1.95	-	V	③
UVLO Release Voltage	V_{UVLOR}	V_{IN} = 1.2V to 2.5V, V_{OUT} = 0.6V, V_{IN} Voltage when Lx pin changes “L” to "H" level		-	2.00	2.48	V	①
Quiescent Current (XCL238)	I_q	V_{OUT} =$V_{OUT(T)}$ ×1.1		-	25	40	μA	②
Quiescent Current (XCL237)	I_q	V_{OUT} =$V_{OUT(T)}$ ×1.1		-	600	1035	μA	②
Stand-by Current	I_{STB}	V_{EN} =0V		-	0.0	1.0	μA	②
ON time	t_{ON}	When connected to external components, V_{IN} =V_{EN}=<C-1>, I_{OUT}=1mA		<E-5>	<E-6>	<E-7>	ns	①
Thermal Shutdown	T_{TSD}	-		-	150	-	℃	①
Thermal shutdown Hysteresis	T_{HYS}	-		-	30	-	℃	①
Lx SW ”H” ON Resistance	R_{LXH}	V_{OUT}=0.6V, I_{LX}=100mA		-	0.14	0.28	Ω	④
Lx SW ”L” ON Resistance (*1)	R_{LXL}	V_{IN}=3.6V,V_{OUT}=$V_{OUT(T)}$ × 1.1, I_{LX}=100mA		-	0.10	0.25	Ω	④
Lx SW ”H” Leakage Current	I_{LeakH}	V_{IN}=5.5V, V_{EN}=0V, V_{OUT}=0V, V_{LX}=0V		-	0.0	1.0	μA	⑤
Lx SW ”L” Leakage Current	I_{LeakL}	V_{IN}=5.5V, V_{EN}=0V, V_{OUT}=0V, V_{LX}=5.5V		-	0.0	1.0	μA	⑤
Current Limit (*2)	I_{LIMH}	V_{OUT}=0.6V, I_{Lx} until Lx pin oscillates		2.5 (*1)	3.0	4.5 (*1)	A	⑥
Output Voltage Temperature Characteristics	ΔV_{OUT}/(V_{OUT}・Δtopr)	I_{OUT}=30mA, -40℃≦Topr≦105℃		-	±100	-	ppm/℃	①
EN ”H” Voltage	V_{ENH}	V_{OUT}=0.6V, Applied voltage to V_{EN}, Voltage changes Lx to “H” level	Ta=25℃	1.4	-	5.5	V	③
			Ta=-40~105℃(*1)					
EN ”L” Voltage	V_{ENL}	V_{OUT}=0.6V, Applied voltage to V_{EN}, Voltage changes Lx to “H” level	Ta=25℃	AGND	-	0.3	V	③
			Ta=-40~105℃(*1)					
EN ”H” Current	I_{ENH}	V_{IN}=5.5V, V_{EN}=5.5V, V_{OUT}=0V		-	0.0	0.1	μA	⑤
EN ”L” Current	I_{ENL}	V_{IN}=5.5V, V_{EN}=0V, V_{OUT}=0V		-	0.0	0.1	μA	⑤
Soft-start Time	t_{SS}	V_{EN}=0V→5.0V, V_{OUT}=$V_{OUT(T)}$ × 0.9 After "H" is fed to EN, the time by when clocks are generated at Lx pin.		0.20	0.40	0.90	ms	③
Short Protection Threshold Voltage	V_{SHORT}	Sweeping V_{OUT}, V_{OUT} voltage which Lx becomes “L” level		0.17	0.27	0.38	V	③
C_L Discharge Resistance	R_{DCHG}	V_{EN}=0V, V_{OUT}=4.0V		100	180	300	Ω	⑦
Inductance	L	Test Freq.=1MHz		-	0.5	-	μH	-

$V_{OUT(T)}$: Nominal Voltage

Unless otherwise stated, V_{IN}=5.0V, V_{EN}=5.0V,

"H" level = V_{IN} - 1.2V ~ V_{IN}, "L" level = -0.1V ~ 0.1V

(*1) Design value.

(*2) Current limit denotes the level of detection at peak of Inductor current.

■ELECTRICAL CHARACTERISTICS

SPEC Table

NOMINAL OUTPUT VOLTAGE	V_{OUT}			t_{ON}			
	<E-1>	<E-2>	<E-3>	<C-1>	<E-5>	<E-6>	<E-7>
$V_{OUT(T)}$	MIN.	TYP.	MAX.	V_{IN}	MIN.	TYP.	MAX.
0.80	0.780	0.800	0.820	2.50	55	107	158
0.85	0.830	0.850	0.870	2.50	61	113	166
0.90	0.880	0.900	0.920	2.50	66	120	174
0.95	0.930	0.950	0.970	2.50	71	127	182
1.00	0.980	1.000	1.020	2.50	77	133	190
1.05	1.029	1.050	1.071	2.50	89	140	191
1.10	1.078	1.100	1.122	2.50	95	147	199
1.15	1.127	1.150	1.173	2.50	100	153	206
1.20	1.176	1.200	1.224	2.50	106	160	214
1.25	1.225	1.250	1.275	2.50	112	167	222
1.30	1.274	1.300	1.326	2.50	117	173	229
1.35	1.323	1.350	1.377	2.50	123	180	237
1.40	1.372	1.400	1.428	2.50	129	187	245
1.45	1.421	1.450	1.479	2.50	134	193	252
1.50	1.470	1.500	1.530	2.50	140	200	260
1.55	1.519	1.550	1.581	2.58	140	200	260
1.60	1.568	1.600	1.632	2.67	140	200	260
1.65	1.617	1.650	1.683	2.75	140	200	260
1.70	1.666	1.700	1.734	2.83	140	200	260
1.75	1.715	1.750	1.785	2.92	140	200	260
1.80	1.764	1.800	1.836	3.00	140	200	260
1.85	1.813	1.850	1.887	3.08	140	200	260
1.90	1.862	1.900	1.938	3.17	140	200	260
1.95	1.911	1.950	1.989	3.25	140	200	260
2.00	1.960	2.000	2.040	3.33	140	200	260
2.05	2.009	2.050	2.091	3.42	140	200	260
2.10	2.058	2.100	2.142	3.50	140	200	260
2.15	2.107	2.150	2.193	3.58	140	200	260
2.20	2.156	2.200	2.244	3.67	140	200	260
2.25	2.205	2.250	2.295	3.75	140	200	260
2.30	2.254	2.300	2.346	3.83	140	200	260
2.35	2.303	2.350	2.397	3.92	140	200	260
2.40	2.352	2.400	2.448	4.00	140	200	260
2.45	2.401	2.450	2.499	4.08	140	200	260
2.50	2.450	2.500	2.550	4.17	140	200	260
2.55	2.499	2.550	2.601	4.25	140	200	260
2.60	2.548	2.600	2.652	4.33	140	200	260
2.65	2.597	2.650	2.703	4.42	140	200	260
2.70	2.646	2.700	2.754	4.50	140	200	260

■ELECTRICAL CHARACTERISTICS

SPEC Table

NOMINAL OUTPUT VOLTAGE	V_{OUT}			t_{ON}			
	<E-1>	<E-2>	<E-3>	<C-1>	<E-5>	<E-6>	<E-7>
$V_{OUT(T)}$	MIN.	TYP.	$V_{OUT(T)}$	V_{IN}	MIN.	TYP.	MAX.
2.75	2.695	2.750	2.805	4.58	140	200	260
2.80	2.744	2.800	2.856	4.67	140	200	260
2.85	2.793	2.850	2.907	4.75	140	200	260
2.90	2.842	2.900	2.958	4.83	140	200	260
2.95	2.891	2.950	3.009	4.92	140	200	260
3.00	2.940	3.000	3.060	5.00	140	200	260
3.05	2.989	3.050	3.111	5.08	140	200	260
3.10	3.038	3.100	3.162	5.17	140	200	260
3.15	3.087	3.150	3.213	5.25	140	200	260
3.20	3.136	3.200	3.264	5.33	140	200	260
3.25	3.185	3.250	3.315	5.42	140	200	260
3.30	3.234	3.300	3.366	5.50	140	200	260
3.35	3.283	3.350	3.417	5.50	143	203	263
3.40	3.332	3.400	3.468	5.50	145	206	267
3.45	3.381	3.450	3.519	5.50	148	209	270
3.50	3.430	3.500	3.570	5.50	150	212	274
3.55	3.479	3.550	3.621	5.50	153	215	277
3.60	3.528	3.600	3.672	5.50	155	218	281

■TEST CIRCUITS

<Circuit No.1>

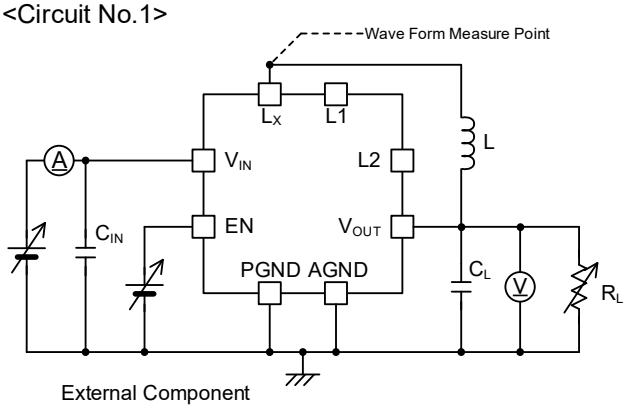

External Component
L : 1.0μH
C_{IN} : 10μF(ceramic)
C_L : 10μF(ceramic)

<Circuit No.2>

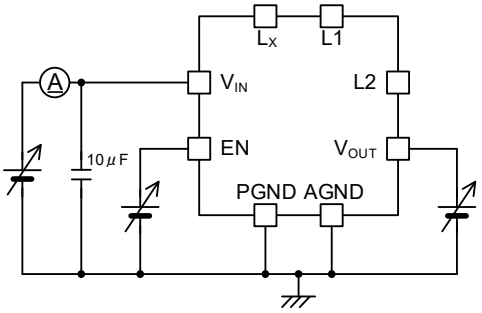

<Circuit No.3>

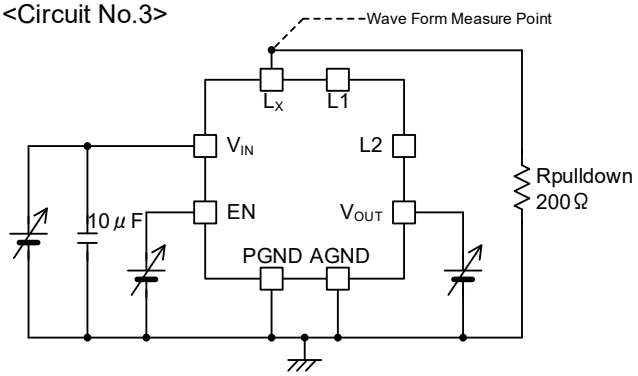

<Circuit No.4>

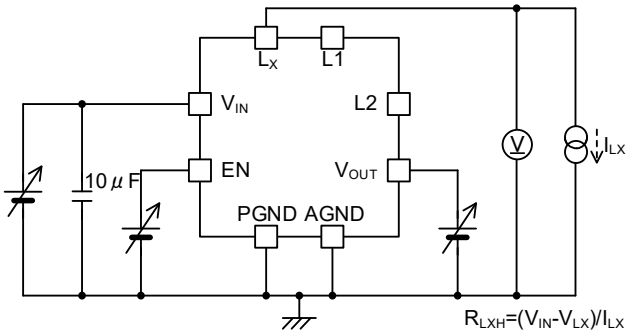

$R_{LXH}=(V_{IN}-V_{LX})/I_{LX}$
$R_{LXL}=V_{LX}/I_{LX}$

<Circuit No.5>

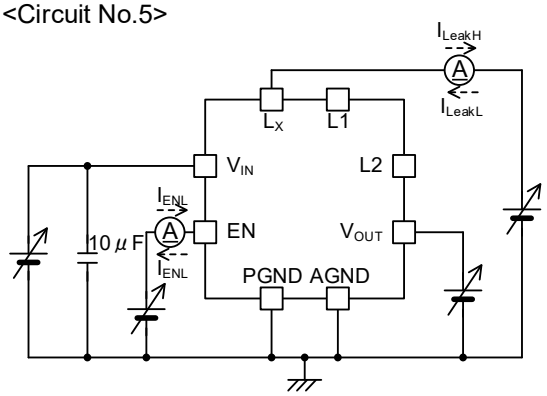

<Circuit No.6>

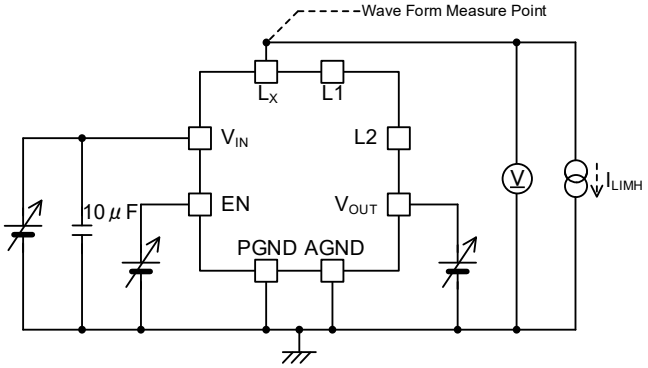

<Circuit No.7>

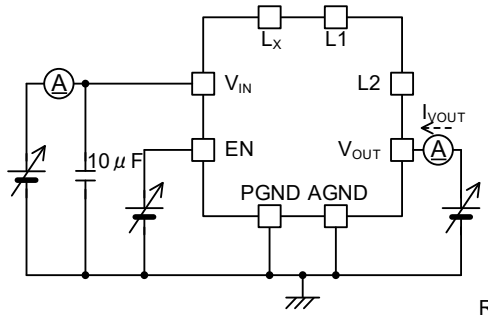

$R_{DCHG}=V_{OUT}/I_{VOUT}$

■TYPICAL APPLICATION CIRCUIT

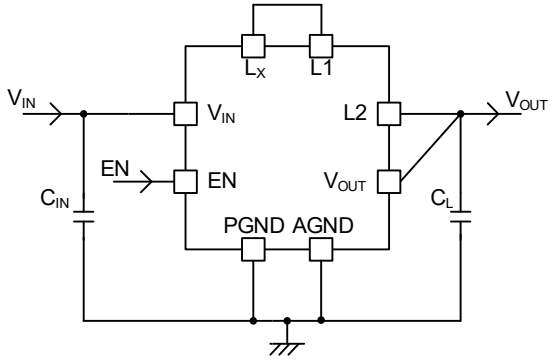

【Typical Examples】

	MANUFACTURER	PRODUCT NUMBER	VALUE	SIZE(L×W×T)
C_{IN}(*1,2)	Murata	GRM188C81A106KA73D	10μF/10V	1.6 x 0.8 x 1.0mm
C_L (*1,3)	Murata	GRM188C81A106KA73D	10μF/10V	1.6 x 0.8 x 1.0mm
	Murata	GRM188C81A226ME01D	22uF/10V	1.6 x 0.8 x 1.0mm

(*1) Some ceramic capacitors have an effective capacitance that is significantly lower than the nominal value due to the applied DC bias and ambient temperature. For the input / output capacitance of this IC, use an appropriate ceramic capacitor according to the DC bias usage conditions (ambient temperature, input / output voltage) so that the effective capacitance value is equal to or higher than the recommended component.

(*2) If using a large-capacity capacitor such as an electrolytic capacitor or tantalum capacitor as the input capacitance, place a low ESR ceramic capacitor in parallel. If a ceramic capacitor is not placed, high-frequency voltage fluctuations will increase and the IC may malfunction.

(*3) If using a large-capacity capacitor as the output capacitance of a B type (with short protection function), the output voltage may not rise during the soft-start time and the short protection function will operate after the soft-start time, causing the IC to latch and stop.

■OPERATIONAL EXPLANATION

This IC consists of a reference voltage source, error amplifier, comparator, phase compensation, on time generation circuit, current limiter circuit, UVLO circuit and so on.

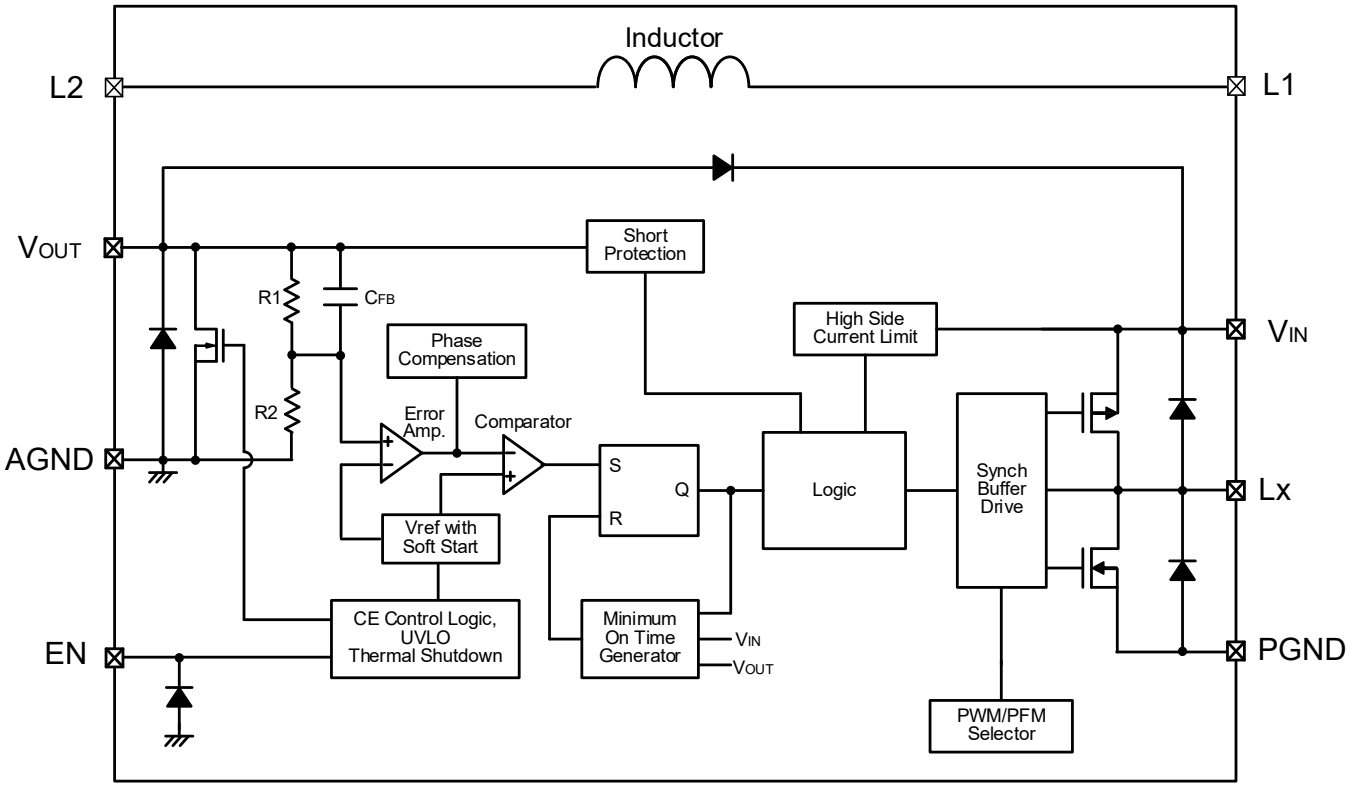

BLOCK DIAGRAM

The control method is HiSAT-COT (High Speed circuit Architecture for Transient with Constant On Time), which features the On time control method and the fast transient response with low ripple voltage.

■OPERATIONAL EXPLANATION (Continued)

＜Nomal operation＞

In HiSAT-COT control, ON time (t_{ON}) dependent on input voltage and output voltage is generated and Pch driver FET. Is turned on.

The on-time is set as follows during light loads.

$$t_{ON} = (V_{OUT} / V_{IN}) \times 333ns$$

The off time (t_{OFF}) is controlled by comparing the output voltage and the reference voltage with the error amplifier and the comparator. Specifically, the reference voltage and a voltage which is obtained by dividing the output voltage with R1 and R2 are compared with using the error amplifier, apply phase compensation to the output of the error amplifier, and send it to the comparator. In the comparator, the output of the error amplifier is compared with the reference voltage, and when it falls below the reference voltage, the SR latch is set and it becomes the ON period again.

PWM control

The XCL237 series (PWM control) operates in continuous conduction mode and operates at a stable oscillation frequency regardless of the load. The oscillation frequency can be obtained by the following equation.

$$f_{OSC} = (V_{OUT} / V_{IN}) \times (1 / t_{ON})$$

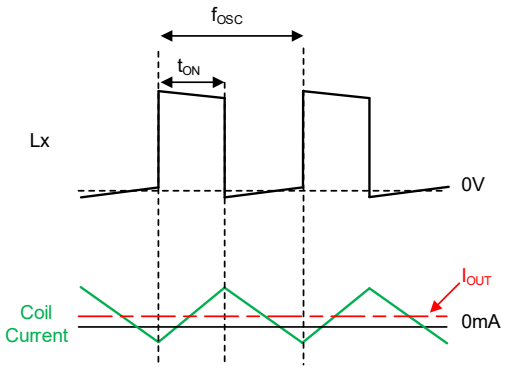

XCL237 series : Example of light load operation

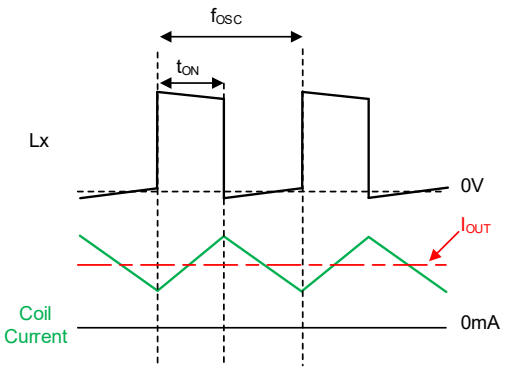

XCL237 series : Example of heavy load operation

PWM/PFM automatic switching control

The XCL238 series (PWM/PFM automatic switching control) lowers the oscillation frequency at light load by operating in discontinuous conduction mode at light load.

As the output current increases, the switching frequency increases proportionally. By this operation, it is possible to reduce switching loss at light load and achieve high efficiency from light load to heavy load.

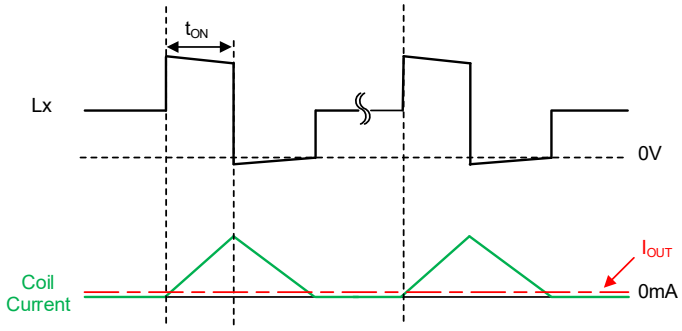

XCL238 series : Example of light load operation

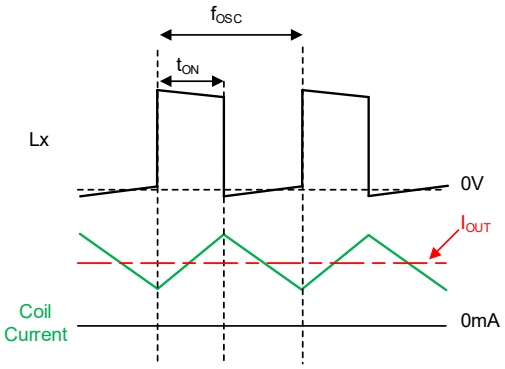

XCL238 series : Example of heavy load operation

■OPERATIONAL EXPLANATION (Continued)

＜100% Duty cycle mode＞

In conditions where the input-output voltage difference is small or transient response, the Pch driver FET might keep on turning on and the 100% duty cycle mode might be set.

The 100% duty cycle mode achieves highspeed response and output voltage stability under the condition where input-output voltage difference is small.

＜EN function＞

When "H" voltage (V_{ENH}) is fed to the EN pin, normal operation starts after raising the output voltage with the soft-start function. When the "L" voltage (V_{ENL}) is fed to the EN pin, it enters the stand-by state and the current consumption is suppressed to I_{STB} (TYP. 0.0μA).

Additionally, Pch driver FET and Nch driver FET are turned off.

＜Start Mode / Soft-Start function＞

It is a function to raise the output voltage gradually and suppress inrush current. After the "H" voltage (V_{ENH}) is fed to the EN pin, the reference voltage which is connected to the error amplifier increases linearly during the soft-start period. As a result, the output voltage increases in proportion to the increase of the reference voltage. This operation can prevent a large inrush current and smoothly raise the output voltage.

During the soft-start function, short protection function does not operate.

Also, even with PWM control, reverse inductor current is prohibited.

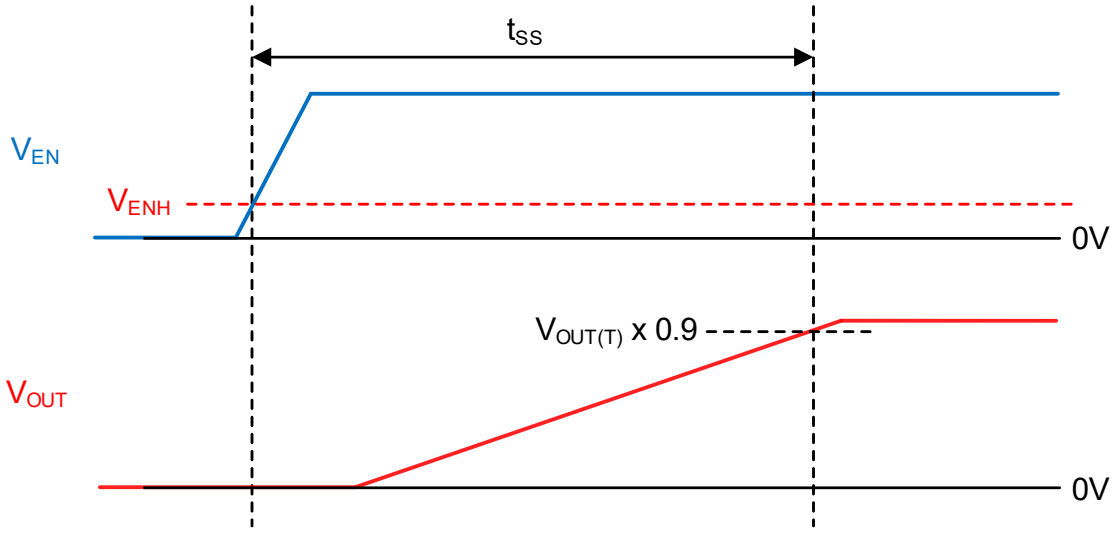

■OPERATIONAL EXPLANATION (Continued)

＜Current Limit / Short protection＞

The current limit function monitors a current flowing through Pch driver FET in each switching cycle and when Pch driver current is more than I_{LIMH} (TYP. 3.0A), an overcurrent detection state occurs.

When the overcurrent detection state occurs, the Pch driver FET is turned off. If the current flowing through Pch driver FET is less than I_{LIMH} in the next switching cycle, the overcurrent detection state is released.

If the overcurrent detection state continues or if there is a significant drop in the output voltage, the B type short circuit protection function will operate.

The detailed operation at overcurrent is as follows.

1) When the current flowing through the Pch driver FET increases and reaches the current limit value I_{LIMH}(TYP. 3.0A), the current limit state is set and the Pch driver FET is forcibly turned off.

2) After the Pch driver FET is turned off, the Nch driver FET is turned on for a certain period of time, and the inductor current decreases. If there is an overload state, the Pch driver FET will turn on again until inductor current reached the current limit value.

3) Further reducing the load resistance will drop output voltage.
When the output voltage drops, the inductor current does not decrease during the Nch Driver FET on period, and when the Pch driver turns on again, inductor current will increase more than the current limit value I_{LIMH}. When the inductor current flowing through the Nch driver FET increases, the Pch driver FET is prohibited to turn on until the current flowing through the Nch driver FET drops to I_{LIML}(TYP. 3.5A).

4) When the output voltage drops below short protection voltage V_{SHORT}(TYP. 0.27V) in an overload condition, the short protection function operates and latched the Pch driver FET and Nch driver in the off state.

■OPERATIONAL EXPLANATION (Continued)

＜Current Limit / Short protection (Continued)＞

■Conditions for reversion from latch stop.

There are two conditions for returning from latch stop due to short protection.

- Input “L” voltage to the EN pin to put it into stand-by state and then put IC into active state.
- After the input voltage is reduced to the UVLO detection state, a voltage higher than V_{UVLOR} is applied to the input voltage and the input voltage is set to the normal state.

To recover from latch stop, the output voltage is raised with the soft-start function, and then normal operation is performed. If the overload condition continues, the IC enters the current limit condition again and the current limit function and short protection function operate.

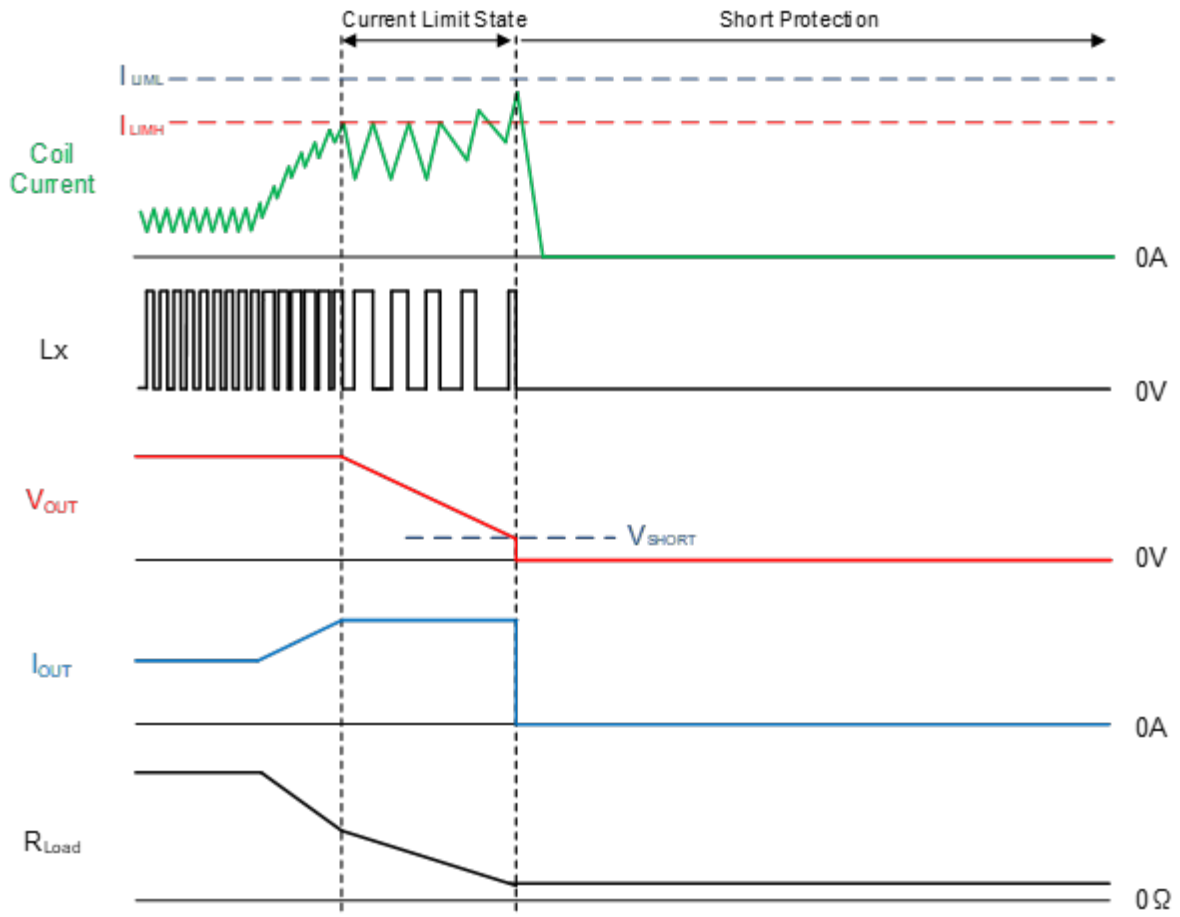

■OPERATIONAL EXPLANATION (Continued)

＜Thermal Shutdown function＞

The Junction temperature is monitored to protect the IC from thermal damage.

When the junction temperature reached T_{TSD} (TYP. 150℃), thermal shutdown operates, the Pch driver FET and Nch driver FET will be turned off. At the same time, the output voltage decreases. When the junction temperature drops to the thermal shutdown release temperature T_{TSD}-T_{HYS} (TYP. 120℃) by stopping the current supply, the output voltage is raised with the soft-start function, and then normal operation is performed.

＜UVLO function＞

When the V_{IN} voltage becomes V_{UVLOD} (TYP. 1.95V) or less, the UVLO function operates to forcibly turn off the Pch driver FET to prevent erroneous pulse output due to operation instability of the internal circuit.

When the V_{IN} voltage becomes V_{UVLOR} (TYP. 2.0V) or more, the UVLO function is canceled. After the UVLO function is canceled, the output voltage rises with the soft-start function, and then the normal operation is performed.

Moreover, during the UVLO operation, the internal circuit is operating because stopping by UVLO is not same to a stand-by mode and just switching operation is stopped.

＜C_L Discharge function＞

This IC uses an Nch FET and resistor connected to the V_{OUT} pin to rapidly discharge the charge on the output capacitor. In order to prevent malfunction of application due to charge remaining on the output capacitor (EN="L") during stand-by.

It also operates in the UVLO detection state.

The output voltage during discharging can be calculated by the following equation.

$$V = V_{OUT} \times e^{-t/\tau}$$
$$t = \tau \ \mathrm{Ln}\ (V_{OUT} / V)$$

V	: Output voltage during discharge
V_{OUT}	: Output voltage
t	: Discharge time
C_L	: Effective capacitance of Output capacitor
R_{DCHG}	: C_L auto-discharge resistance
τ	: $C_L \times R_{DCHG}$

■NOTE ON USE

1) For the phenomenon of temporal and transitional voltage decrease or voltage increase, the IC may be damaged or deteriorated if IC is used beyond the absolute MAX. specifications. Also, if used under out of the recommended operating range, the IC may not operate normally or may cause deterioration.

2) Spike noise and ripple voltage arise in a switching regulator as with a DC/DC converter. These are greatly influenced by external component selection, such as capacitance values, and board layout of external components. Once the design has been completed, verification with actual components should be done.

3) The DC/DC converter characteristics depend greatly on the externally connected components as well as on the characteristics of this IC, so refer to the specifications and standard circuit examples of each component when carefully considering which components to select. Especially for C_L capacitor, it is recommended to use an appropriate ceramic capacitor according to the DC bias usage conditions (ambient temperature, input / output voltage) so that the effective capacitance value is equal to or higher than the recommended component.

4) Due to propagation delay inside the product, the on time generated by the on time generation circuit is not the same as the on time that is the ratio of the input voltage to the output voltage.

5) The actual inductor current may at times exceed the current limit value (I_{LIMH}) due to propagation delays in the current limiting circuit.

6) Regarding PWM/PFM auto switching control method, it works with a discontinuous conduction mode at light loads, and in this case where the voltage difference between input voltage and output voltage is low, the inductor current may reverse when the load is light, and thus pulse skipping will not be possible and light load efficiency will worsen.

7) When the voltage difference between input voltage and output voltage is low, the load stability feature may deteriorate.

8) When the voltage difference between input voltage and output voltage is small at low temperatures, the ripple voltage may increase. If countermeasures are taken, the ripple voltage can be suppressed by increasing the output capacitance.

XCL237,$V_{OUT(T)}$=1.8V

V_{IN}=3.0V
I_{OUT}=1mA
Ta=-40℃
C_{IN}=10μF(GRM188C81A106KA73)
C_L=10μF(GRM188C81A106KA73)

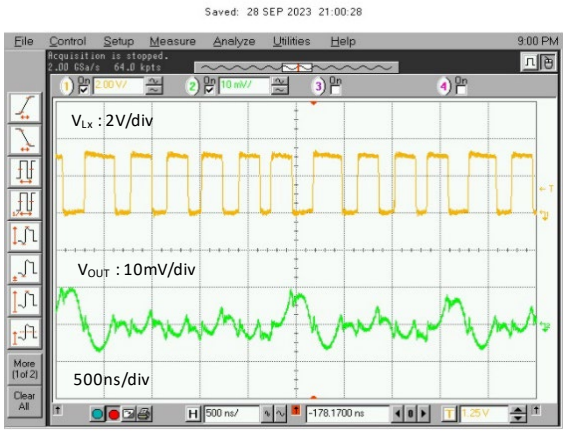

XCL237,$V_{OUT(T)}$=1.8V

V_{IN}=3.0V
I_{OUT}=1mA
Ta=-40℃
C_{IN}=10μF(GRM188C81A106KA73)
C_L=10μF×2(GRM188C81A106KA73)

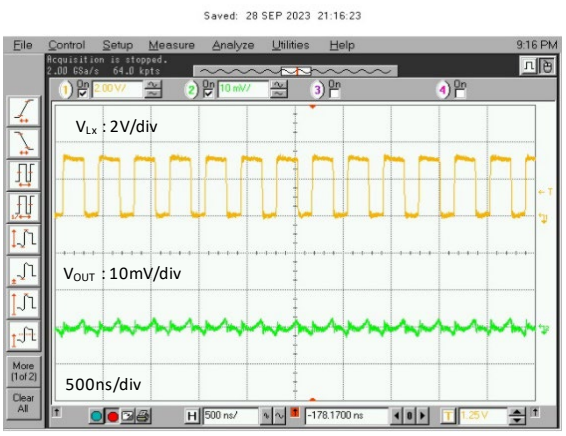

9) Torex places an importance on improving our products and their reliability. We request that users incorporate fail safe designs and post aging protection treatment when using Torex products in their systems.

10) The internal coil is for this product only. Do not use it for any purpose other than this product.

11) This IC is an Inductor Built-in product, do not place it in an environment with a strong magnetic field such as near a magnet.
The influence of a strong magnetic field may cause a decrease in inductance value, deterioration of efficiency, and abnormal operation of the IC.

■NOTE ON USE (Continued)

●Instructions of pattern layouts

Especially noted in the pattern layout are as follows.
Please refer to the reference pattern layout on the next page.

(a) Wire the large current line using thick, short connecting traces.
This makes it possible to reduce the wire impedance, which is expected to reduce noise and improve heat dissipation.
If the wire impedance of the large current line is large, it may cause noise or the IC to not operate normally.

(b) Place the input capacitance C_{IN}, output capacitance C_L, IC which the large current flows on the same surface. If they are placed on both sides, a large current will flow through Via, which has high impedance, it may cause noise and the IC may not operate normally.

(c) Please mount each external component as close to the IC as possible.
Especially place the input capacitance C_{IN} near the IC and connect it with as low impedance as possible.
If the input capacity C_{IN} and IC are too far apart, it may cause noise or the IC may not operate normally.

<Reference pattern layout>

Layer 1

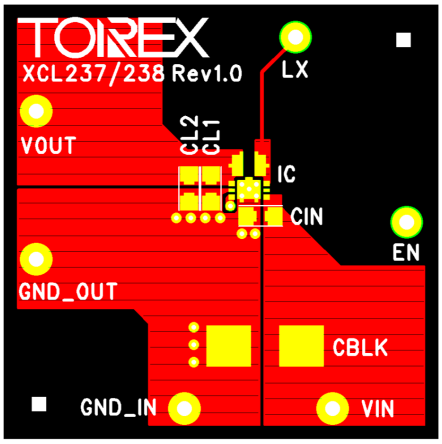

Layer 2

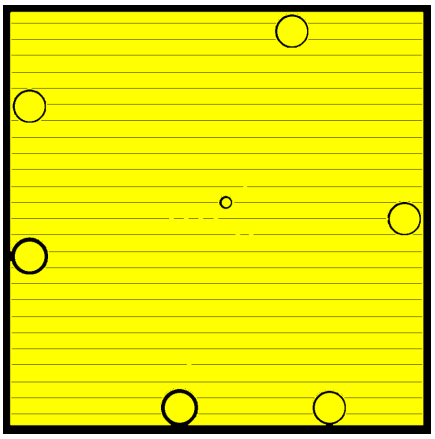

Layer 3

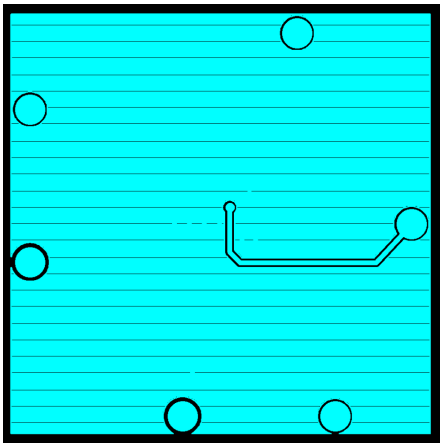

Layer 4

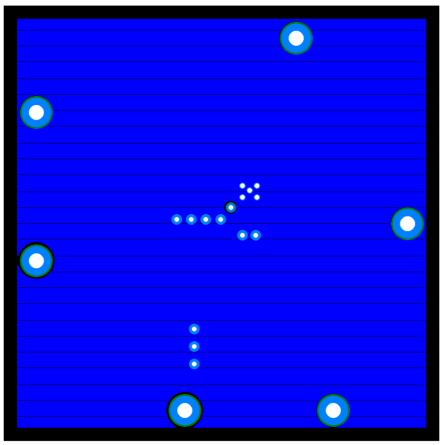

■TYPICAL PERFORMANCE CHARACTERISTICS

(1) Efficiency vs. Output Current

$V_{OUT(T)}$=0.8V

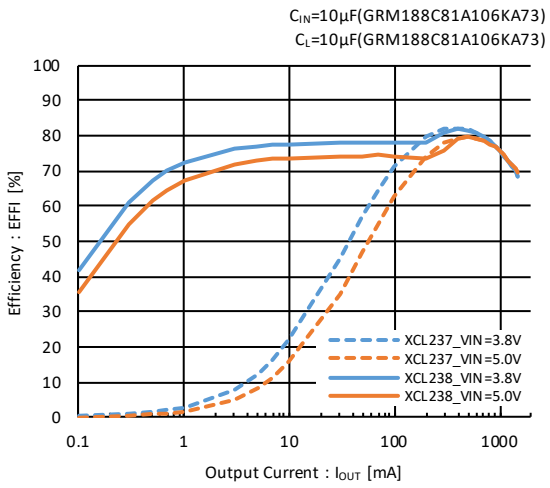

$V_{OUT(T)}$=1.8V

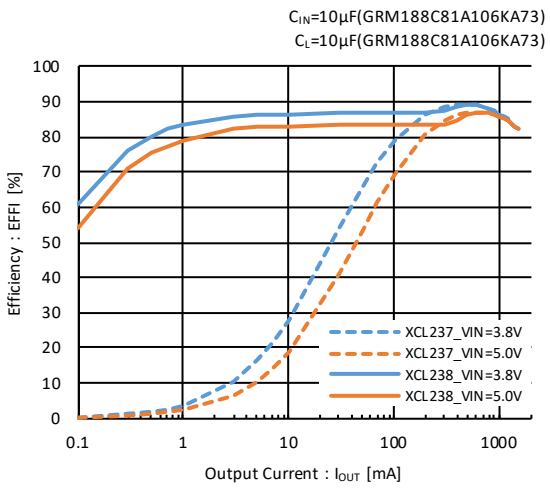

$V_{OUT(T)}$=3.3V

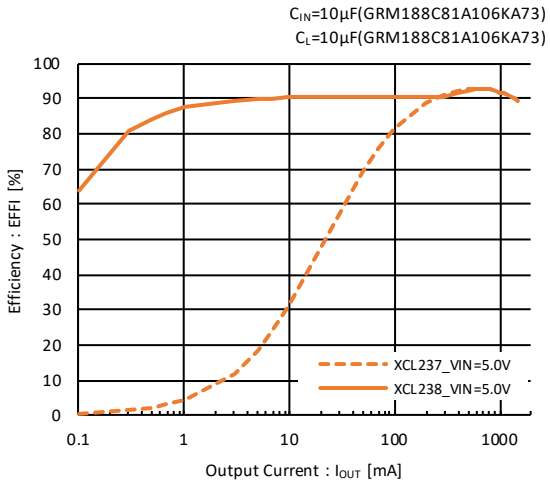

(2) Output Voltage vs. Output Current

$V_{OUT(T)}$=1.8V

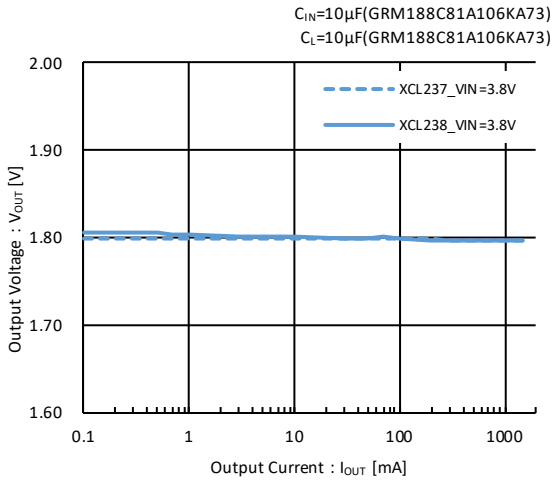

$V_{OUT(T)}$=3.3V

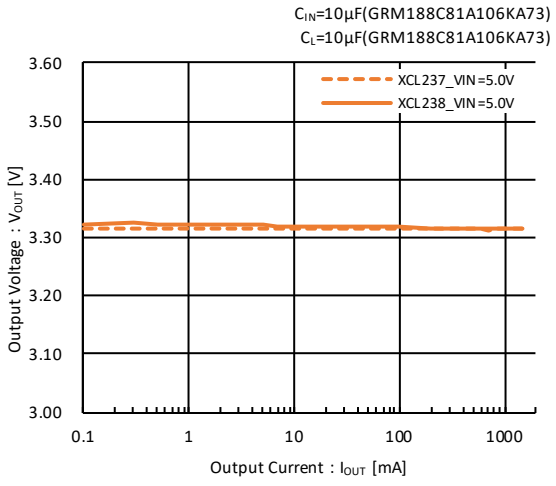

■TYPICAL PERFORMANCE CHARACTERISTICS

(3) Ripple Voltage vs. Output Current

$V_{OUT(T)}$=1.8V

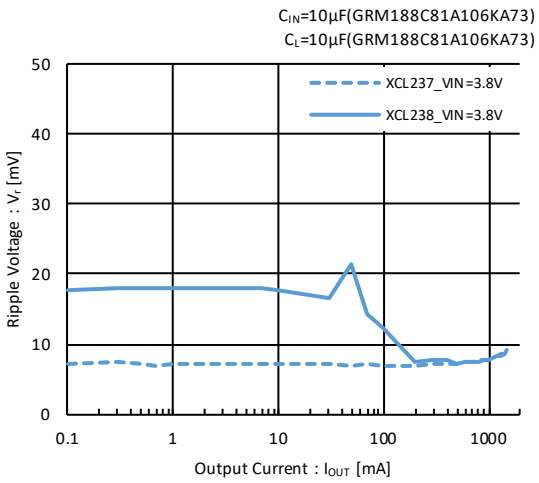

$V_{OUT(T)}$=3.3V

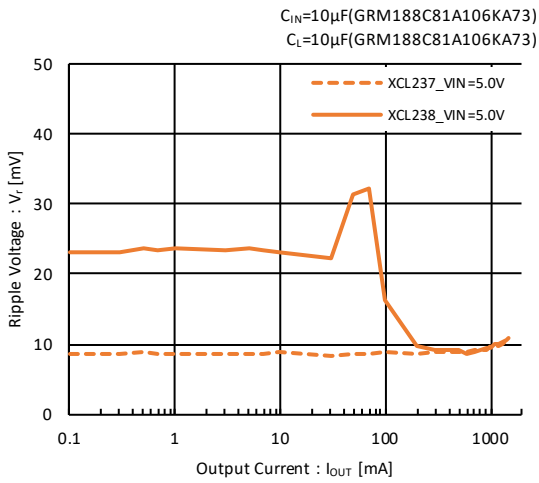

(4) Output Voltage vs. Ambient Temperature

$V_{OUT(T)}$=1.8V

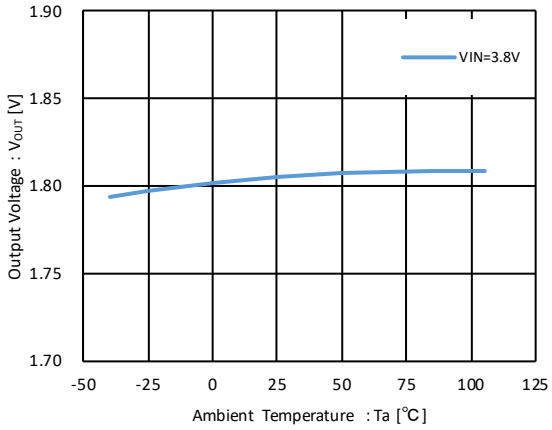

(5) UVLO Voltage vs. Ambient Temperature

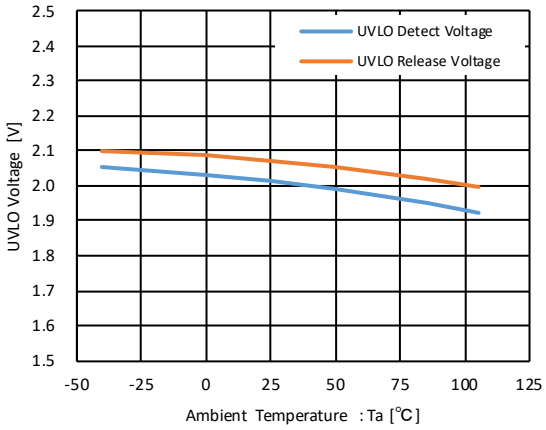

(6) Quiescent Current vs. Ambient Temperature

XCL237

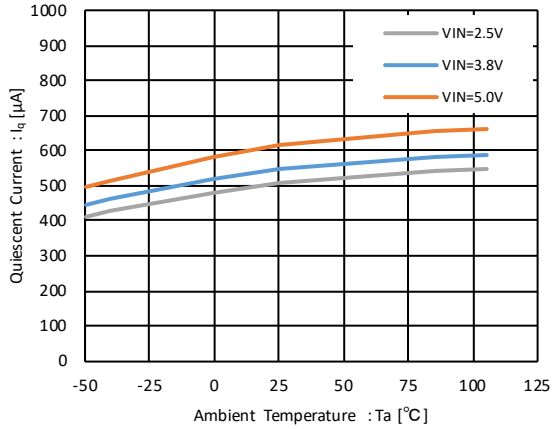

XCL238

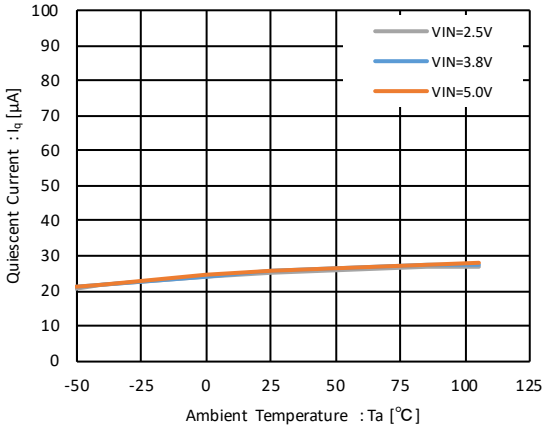

■TYPICAL PERFORMANCE CHARACTERISTICS

(7) Stand-by Current vs. Ambient Temperature

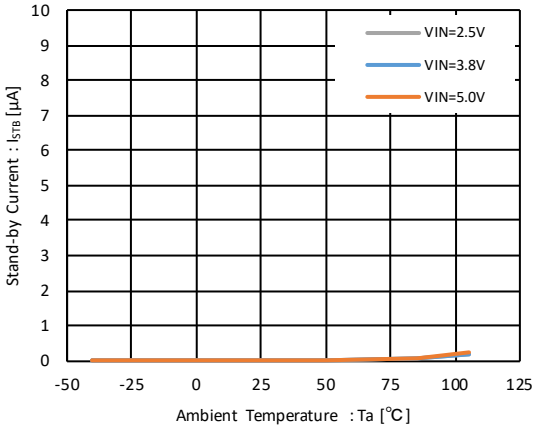

(8) Lx SW "H" ON Resistance vs. Ambient Temperature

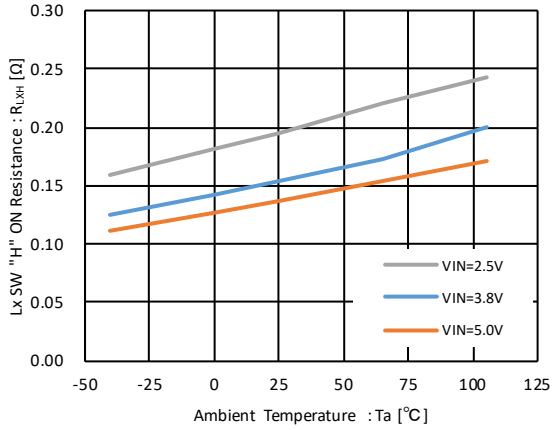

(9) Lx SW "L" ON Resistance vs. Ambient Temperature

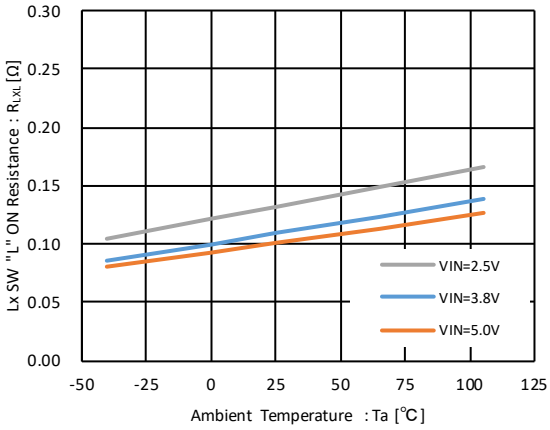

(10) Lx SW "H" Leakage Current vs. Ambient Temperature

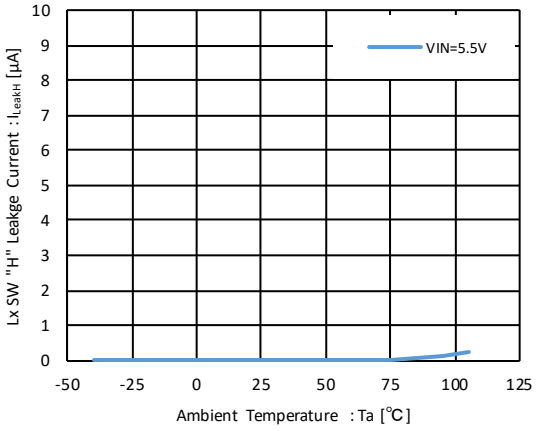

(11) Lx SW "L" Leakage Current vs. Ambient Temperature

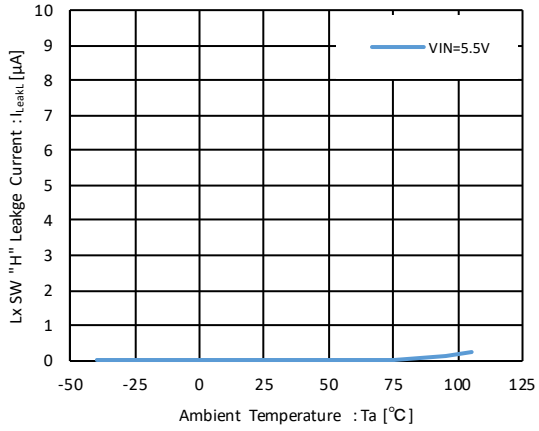

■TYPICAL PERFORMANCE CHARACTERISTICS

(12) Oscillation Frequency vs. Output Current

XCL237,$V_{OUT(T)}$=0.8V

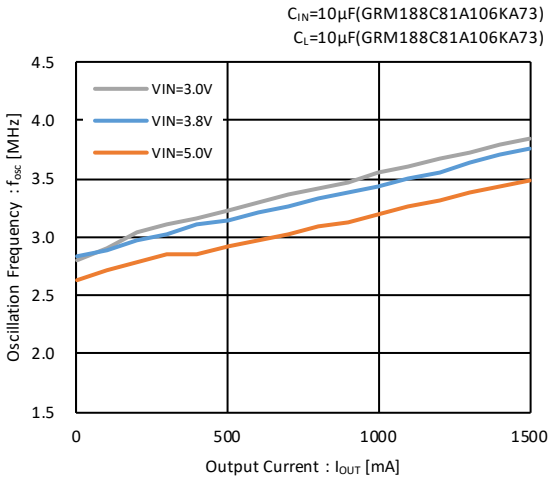

XCL237,$V_{OUT(T)}$=1.8V

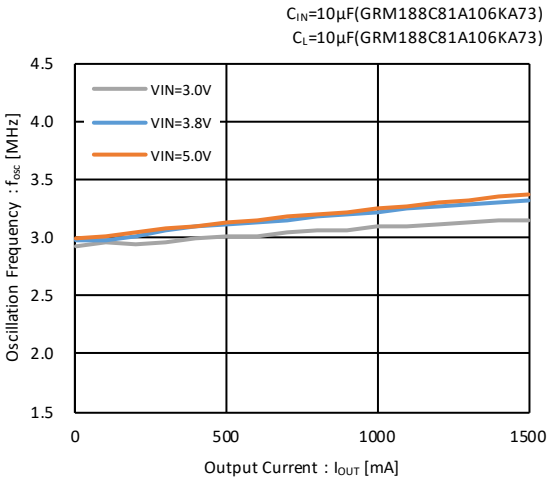

XCL237,$V_{OUT(T)}$=3.3V

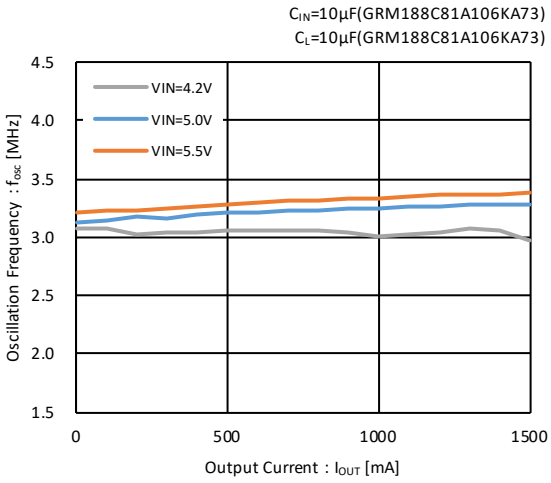

(13) EN “H” Voltage vs. Ambient Temperature

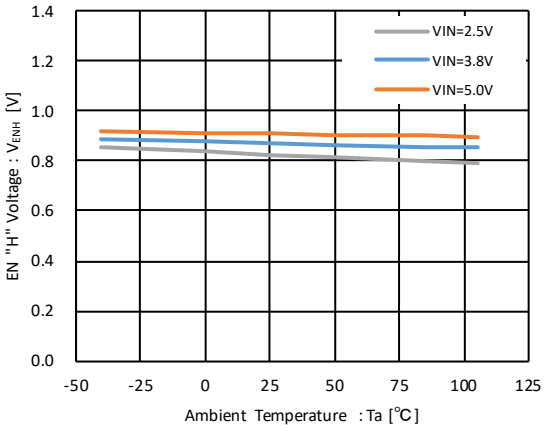

(14) EN “L” Voltage vs. Ambient Temperature

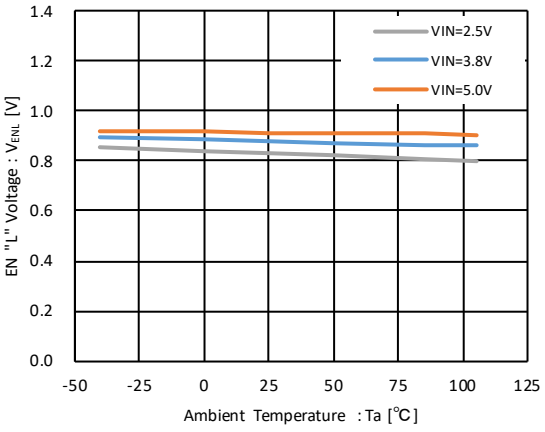

■TYPICAL PERFORMANCE CHARACTERISTICS

(15) Soft-Start Time vs. Ambient Temperature

XCL237B/XCL238B

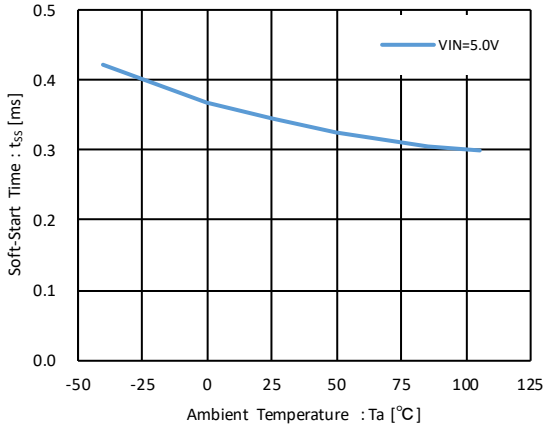

XCL237E/XCL238E

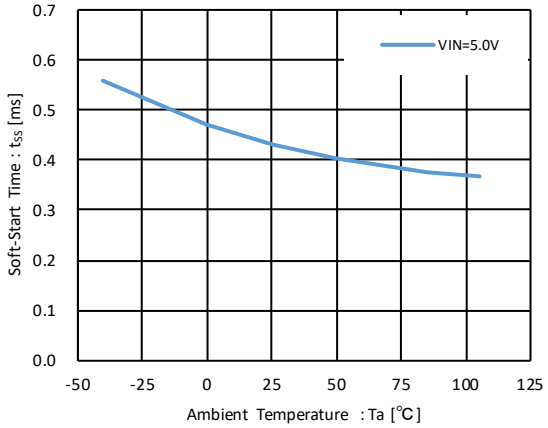

(16) Current Limit vs. Ambient Temperature

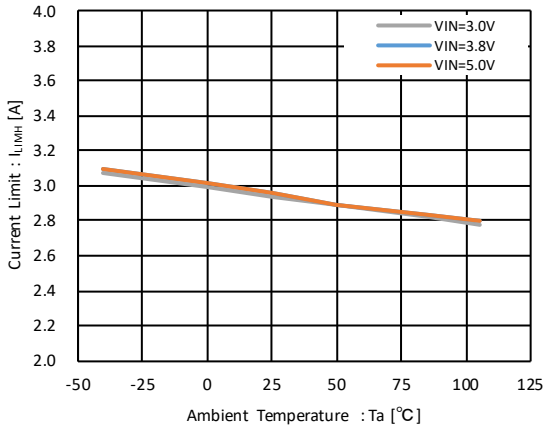

(17) C_L Discharge Resistance vs. Ambient Temperature

V_{IN}=5.0V,V_{OUT}=4.0V

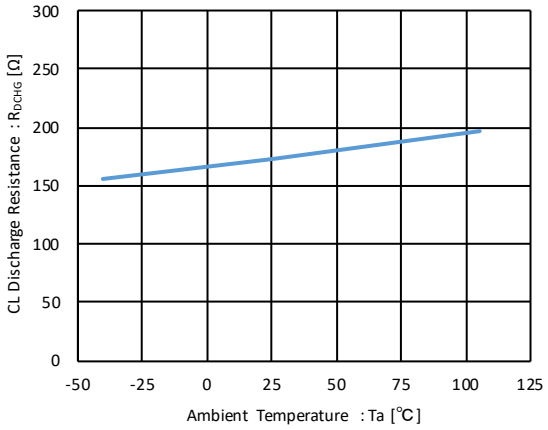

(18) Short Protection Voltage vs. Ambient Temperature

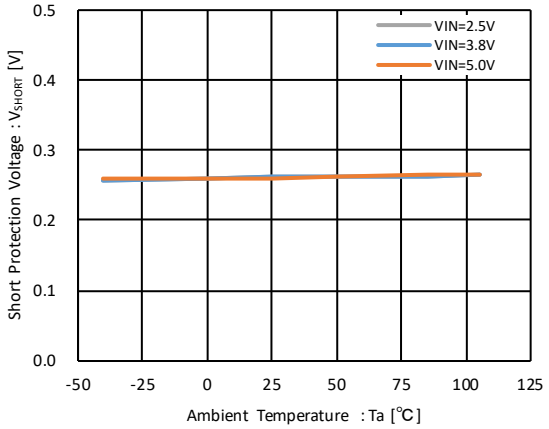

(19) Coil Direct Current Resistance vs. Ambient Temperature

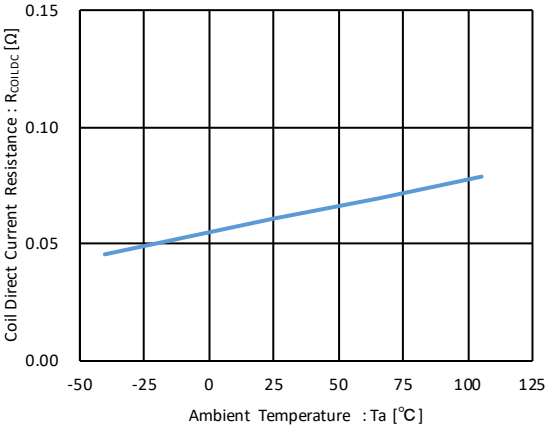

■TYPICAL PERFORMANCE CHARACTERISTICS

(20) Load Transient Response

XCL237,$V_{OUT(T)}$=0.8V

V_{IN}=5.0V C_{IN}=10μF(GRM188C81A106KA73)
I_{OUT}=1mA⇔ 1000mA(tr,tf=1μs) C_L=10μF(GRM188C81A106KA73)



XCL238,$V_{OUT(T)}$=0.8V

V_{IN}=5.0V C_{IN}=10μF(GRM188C81A106KA73)
I_{OUT}=1mA⇔ 1000mA(tr,tf=1μs) C_L=10μF(GRM188C81A106KA73)



XCL237,$V_{OUT(T)}$=1.8V

V_{IN}=5.0V C_{IN}=10μF(GRM188C81A106KA73)
I_{OUT}=1mA⇔ 1000mA(tr,tf=1μs) C_L=10μF(GRM188C81A106KA73)

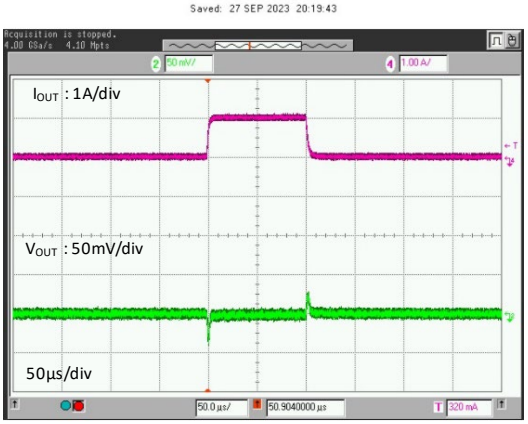

XCL238,$V_{OUT(T)}$=1.8V

V_{IN}=5.0V C_{IN}=10μF(GRM188C81A106KA73)
I_{OUT}=1mA⇔ 1000mA(tr,tf=1μs) C_L=10μF(GRM188C81A106KA73)

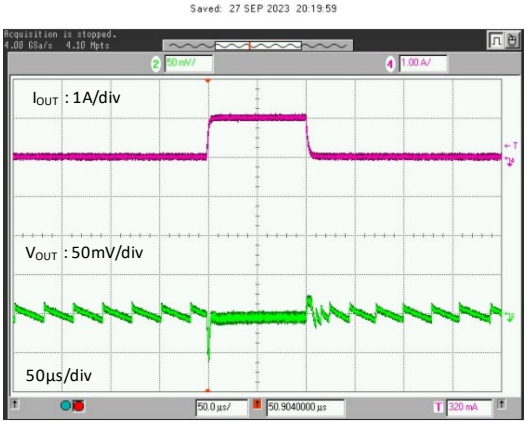

XCL237,$V_{OUT(T)}$=3.3V

V_{IN}=5.0V C_{IN}=10μF(GRM188C81A106KA73)
I_{OUT}=1mA⇔ 1000mA(tr,tf=1μs) C_L=10μF(GRM188C81A106KA73)

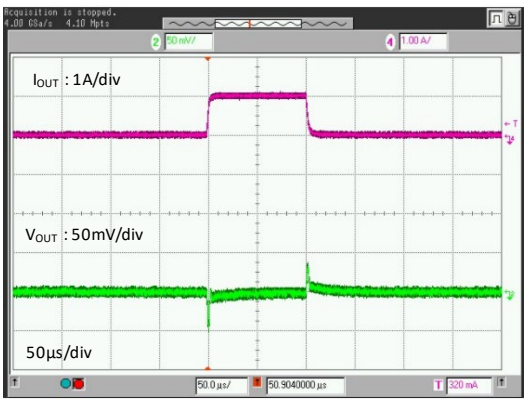

XCL238,$V_{OUT(T)}$=3.3V

V_{IN}=5.0V C_{IN}=10μF(GRM188C81A106KA73)
I_{OUT}=1mA⇔ 1000mA(tr,tf=1μs) C_L=10μF(GRM188C81A106KA73)



■TYPICAL PERFORMANCE CHARACTERISTICS

(21) Start-up

XCL237B, $V_{OUT(T)}$=1.8V

V_{IN}=3.6V
V_{EN}=0V⇒5V　　C_{IN}=10μF(GRM188C81A106KA73)
R_L=1.8kΩ　　C_L=10μF(GRM188C81A106KA73)



XCL238B, $V_{OUT(T)}$=1.8V

V_{IN}=3.6V
V_{EN}=0V⇒5V　　C_{IN}=10μF(GRM188C81A106KA73)
R_L=1.8kΩ　　C_L=10μF(GRM188C81A106KA73)



XCL237E, $V_{OUT(T)}$=1.8V

V_{IN}=3.6V
V_{EN}=0V⇒5V　　C_{IN}=10μF(GRM188C81A106KA73)
R_L=1.8kΩ　　C_L=10μF(GRM188C81A106KA73)



XCL238E, $V_{OUT(T)}$=1.8V

V_{IN}=3.6V
V_{EN}=0V⇒5V　　C_{IN}=10μF(GRM188C81A106KA73)
R_L=1.8kΩ　　C_L=10μF(GRM188C81A106KA73)



(22) Shutdown

$V_{OUT(T)}$=1.8V

V_{IN}=3.6V
V_{EN}=5V⇒0V　　C_{IN}=10μF(GRM188C81A106KA73)
R_L=1.8kΩ　　C_L=10μF(GRM188C81A106KA73)

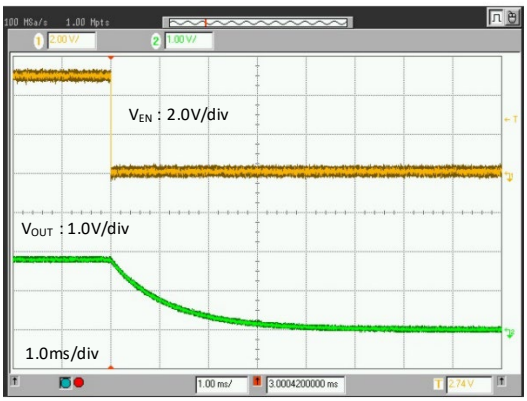

■PACKAGE INFORMATION

For the latest package information go to, www.torexsemi.com/technical-support/packages

PACKAGE	OUTLINE / LAND PATTERN	THERMAL CHARACTERISTICS
USP-9B01	USP-9B01 PKG	USP-9B01 Power Dissipation

■MARKING RULE

① represents products series

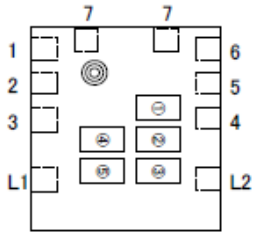

SYMBOL	PRODUCT SERIES
E	XCL237******-G
F	XCL238******-G

② represents type and integer part of the output voltage

SYMBOL	Type	VOUT (V)	PRODUCT SERIES
A	B	0.X	XCL23*B0****-G
B	B	1.X	XCL23*B1****-G
C	B	2.X	XCL23*B2****-G
D	B	3.X	XCL23*B3****-G
E	E	0.X	XCL23*E0****-G
F	E	1.X	XCL23*E1****-G
H	E	2.X	XCL23*E2****-G
K	E	3.X	XCL23*E3****-G

③ represents the decimal points of the output voltage

SYMBOL	VOUT (V)	PRODUCT SERIES	SYMBOL	VOUT (V)	PRODUCT SERIES
0	X.0	XCL23***0***-G	A	X.05	XCL23***A***-G
1	X.1	XCL23***1***-G	B	X.15	XCL23***B***-G
2	X.2	XCL23***2***-G	C	X.25	XCL23***C***-G
3	X.3	XCL23***3***-G	D	X.35	XCL23***D***-G
4	X.4	XCL23***4***-G	E	X.45	XCL23***E***-G
5	X.5	XCL23***5***-G	F	X.55	XCL23***F***-G
6	X.6	XCL23***6***-G	H	X.65	XCL23***H***-G
7	X.7	XCL23***7***-G	K	X.75	XCL23***K***-G
8	X.8	XCL23***8***-G	L	X.85	XCL23***L***-G
9	X.9	XCL23***9***-G	M	X.95	XCL23***M***-G

④,⑤ represents production lot number 01～09、0A～0Z、11～9Z、A1～A9、AA～AZ、B1～ZZ in order.
(G, I, J, O, Q, W excluded)

1. The product and product specifications contained herein are subject to change without notice to improve performance characteristics. Consult us, or our representatives before use, to confirm that the information in this datasheet is up to date.

2. The information in this datasheet is intended to illustrate the operation and characteristics of our products. We neither make warranties or representations with respect to the accuracy or completeness of the information contained in this datasheet nor grant any license to any intellectual property rights of ours or any third party concerning with the information in this datasheet.

3. Applicable export control laws and regulations should be complied and the procedures required by such laws and regulations should also be followed, when the product or any information contained in this datasheet is exported.

4. The product is neither intended nor warranted for use in equipment of systems which require extremely high levels of quality and/or reliability and/or a malfunction or failure which may cause loss of human life, bodily injury, serious property damage including but not limited to devices or equipment used in 1) nuclear facilities, 2) aerospace industry, 3) medical facilities, 4) automobile industry and other transportation industry and 5) safety devices and safety equipment to control combustions and explosions. Do not use the product for the above use unless agreed by us in writing in advance.

5. Although we make continuous efforts to improve the quality and reliability of our products; nevertheless, Semiconductors are likely to fail with a certain probability. So in order to prevent personal injury and/or property damage resulting from such failure, customers are required to incorporate adequate safety measures in their designs, such as system fail safes, redundancy and fire prevention features.

6. Our products are not designed to be Radiation-resistant.

7. Please use the product listed in this datasheet within the specified ranges.

8. We assume no responsibility for damage or loss due to abnormal use.

9. All rights reserved. No part of this datasheet may be copied or reproduced unless agreed by Torex Semiconductor Ltd in writing in advance.

TOREX SEMICONDUCTOR LTD.