TOSHIBA BiCD Integrated Circuit Silicon Monolithic

TB6600HG

PWM Chopper-Type bipolar
Stepping Motor Driver IC

The TB6600HG is a PWM chopper-type single-chip bipolar sinusoidal micro-step stepping motor driver.
Forward and reverse rotation control is available with 2-phase, 1-2-phase, W1-2-phase, 2W1-2-phase, and 4W1-2-phase excitation modes.
2-phase bipolar-type stepping motor can be driven by only clock signal with low vibration and high efficiency.

TB6600HG

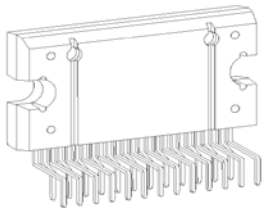

HZIP25-P-1.00F

Weight:
HZIP25-P-1.00F: 7.7g (typ.)

Features

- Single-chip bipolar sinusoidal micro-step stepping motor driver
- Ron (upper + lower) = 0.4 Ω (typ.)
- Forward and reverse rotation control available
- Selectable phase drive (1/1, 1/2, 1/4, 1/8, and 1/16 step)
- Output withstand voltage: Vcc = 50 V
- Output current: I_{OUT} = 5.0 A (absolute maximum ratings, peak)
  I_{OUT} = 4.5 A (operating range, maximal value)
- Packages: HZIP25-P-1.00F
- Built-in input pull-down resistance: 100 kΩ (typ.), (only TQ terminal: 70 k Ω (typ.))
- Output monitor pins (ALERT): Maximum of I_{ALERT} = 1 mA
- Output monitor pins (MO): Maximum of I_{MO} = 1 mA
- Equipped with reset and enable pins
- Stand by function
- Single power supply
- Built-in thermal shutdown (TSD) circuit
- Built-in under voltage lock out (UVLO) circuit
- Built-in over-current detection (ISD) circuit

Pin Functions

Pin No.	I/O	Symbol	Functional Description	Remark
1	Output	ALERT	TSD / ISD monitor pin	Pull-up by external resistance
2	—	SGND	Signal ground	
3	Input	TQ	Torque (output current) setting input pin	
4	Input	Latch/Auto	Select a return type for TSD.	L: Latch, H: Automatic return
5	Input	Vref	Voltage input for 100% current level	
6	Input	Vcc	Power supply	
7	Input	M1	Excitation mode setting input pin	
8	Input	M2	Excitation mode setting input pin	
9	Input	M3	Excitation mode setting input pin	
10	Output	OUT2B	B channel output 2	
11	—	N_{FB}	B channel output current detection pin	
12	Output	OUT1B	B channel output 1	
13	—	PGNDB	Power ground	
14	Output	OUT2A	A channel output 2	
15	—	N_{FA}	A channel output current detection pin	
16	Output	OUT1A	A channel output 1	
17	—	PGNDA	Power ground	
18	Input	ENABLE	Enable signal input pin	H: Enable, L: All outputs off
19	Input	RESET	Reset signal input pin	L: Initial mode
20	Input	Vcc	Power supply	
21	Input	CLK	CLK pulse input pin	
22	Input	CW/CCW	Forward/reverse control pin	L: CW, H:CCW
23	—	OSC	Resistor connection pin for internal oscillation setting	
24	Output	Vreg	Control side connection pin for power capacitor	Connecting capacitor to SGND
25	Output	MO	Electrical angle monitor pin	Pull-up by external resistance

<Terminal circuits>

Input pins
(M1, M2, M3,CLK, CW/CCW,
ENABLE, RESET, Latch/Auto)

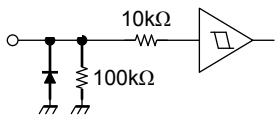

Input pins
(TQ)

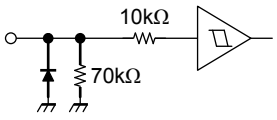

Pin Assignment

(Top View)

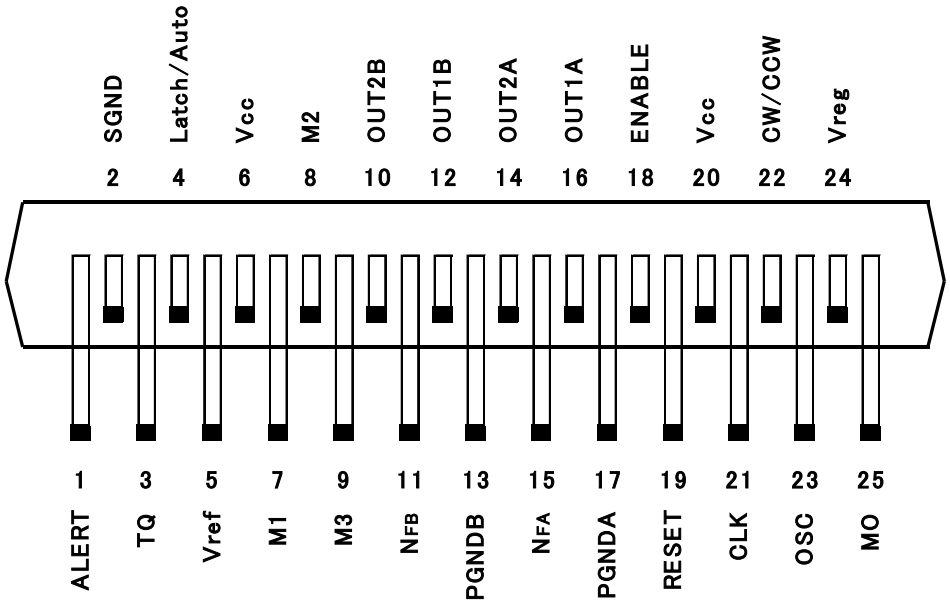

Block Diagram

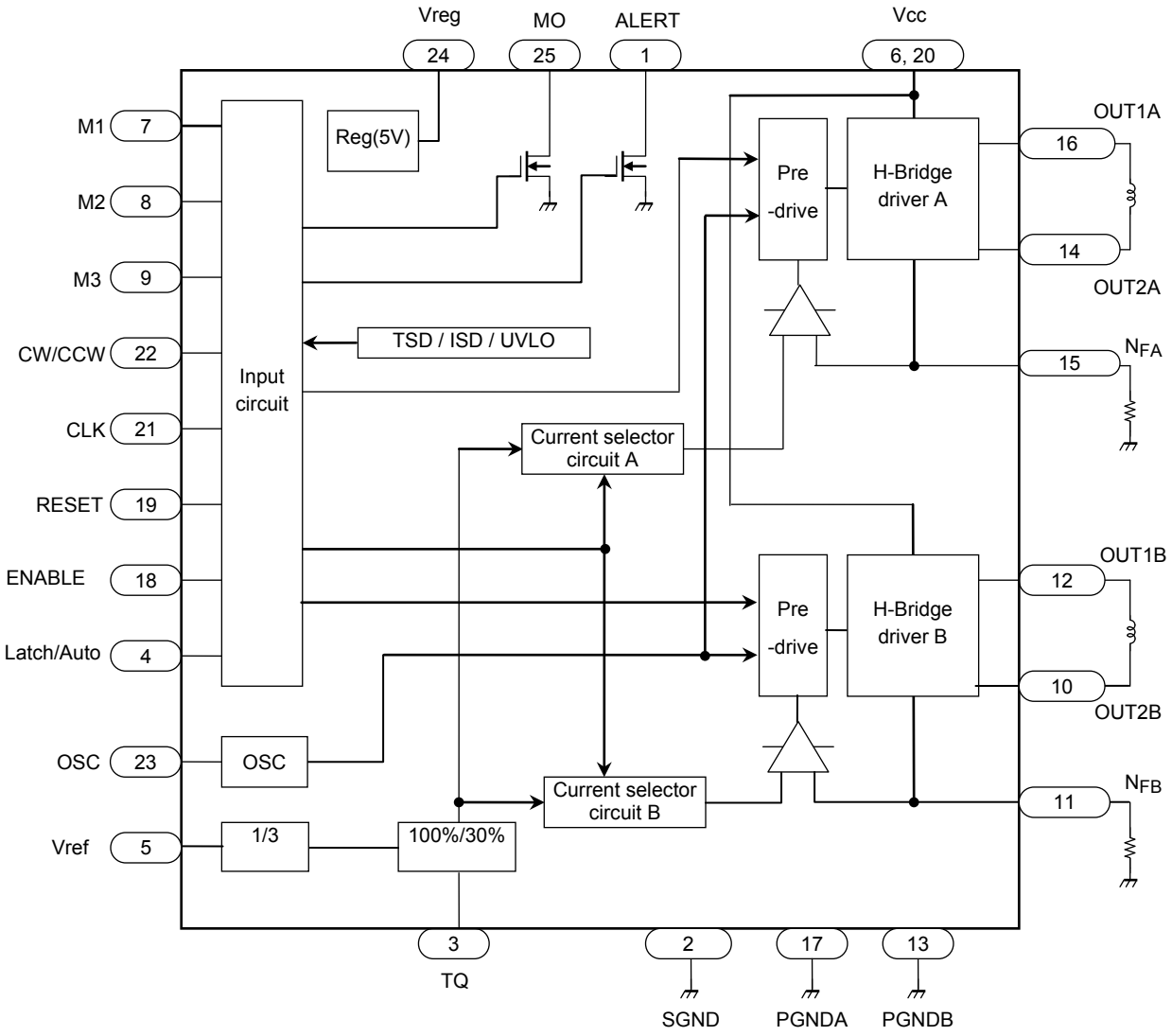

Setting of Vref

Input TQ	Voltage ratio
L	30%
H	100%

Description of Functions

1. Excitation Settings

The excitation mode can be selected from the following eight modes using the M1, M2 and M3 inputs. New excitation mode starts from the initial mode when M1, M2, or M3 inputs are shifted during motor operation. In this case, output current waveform may not continue.

Input			Mode (Excitation)
M1	M2	M3	
L	L	L	Standby mode (Operation of the internal circuit is almost turned off.)
L	L	H	1/1 (2-phase excitation, full-step)
L	H	L	1/2A type (1-2 phase excitation A type) (0%, 71%, 100%)
L	H	H	1/2B type (1-2 phase excitation B type) (0%, 100%)
H	L	L	1/4 (W1-2 phase excitation)
H	L	H	1/8 (2W1-2 phase excitation)
H	H	L	1/16 (4W1-2 phase excitation)
H	H	H	Standby mode (Operation of the internal circuit is almost turned off.)

Note: To change the exciting mode by changing M1, M2, and M3, make sure not to set M1 = M2 = M3 = L or M1 = M2 = M3 = H.

Standby mode

The operation mode moves to the standby mode under the condition M1 = M2 = M3 = L or M1 = M2 = M3 = H.
The power consumption is minimized by turning off all the operations except protecting operation.
In standby mode, output terminal MO is HZ.
Standby mode is released by changing the state of M1=M2=M3=L and M1=M2=M3=H to other state.
Input signal is not accepted for about 200 μs after releasing the standby mode.

2. Function

(1)To turn on the output, configure the ENABLE pin high. To turn off the output, configure the ENABLE pin low.
(2) The output changes to the Initial mode shown in the table below when the ENABLE signal goes High level and the RESET signal goes Low level. (In this mode, the status of the CLK and CW/CCW pins are irrelevant.)
(3) As shown in the below figure of Example 1, when the ENABLE signal goes Low level, it sets an OFF on the output. In this mode, the output changes to the initial mode when the RESET signal goes Low level. Under this condition, the initial mode is output by setting the ENABLE signal High level. And the motor operates from the initial mode by setting the RESET signal High level.

(Example 1)

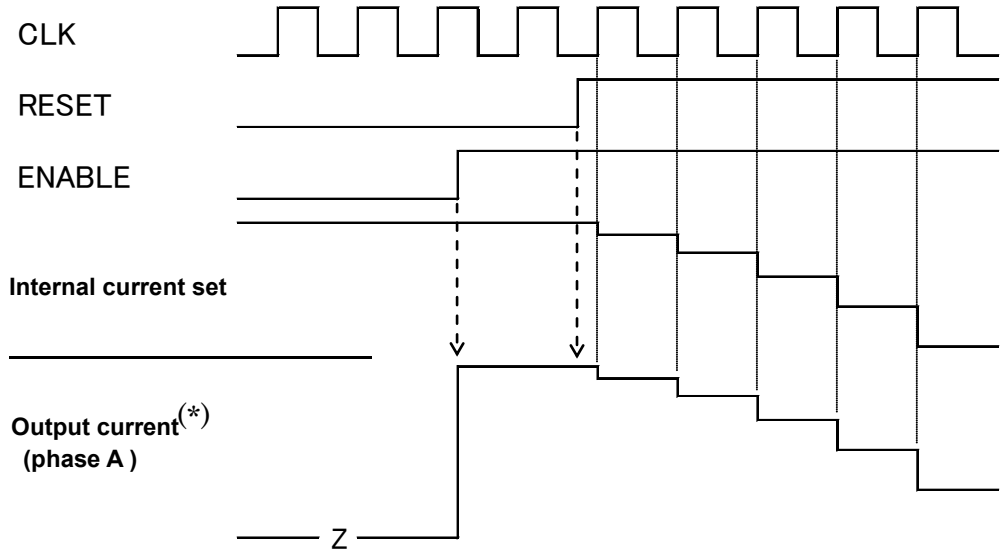

(*: Output current starts rising at the timing of PWM frequency just after ENABLE pin outputs high.)

Input				Output mode
CLK	CW/CCW	RESET	ENABLE	
↑	L	H	H	CW
↑	H	H	H	CCW
X	X	L	H	Initial mode
X	X	X	L	Z

Command of the standby has a higher priority than ENABLE. Standby mode can be turned on and off regardless of the state of ENABLE.
X: Don't Care

3. Initial Mode

When RESET is used, the phase currents are as follows.

Excitation Mode	Phase A Current	Phase B Current
1/1 (2-phase excitation, full-step)	100%	-100%
1/2A type (1-2 phase excitation A type) (0%, 71%, 100%)	100%	0%
1/2B type (1-2 phase excitation B type) (0%, 100%)	100%	0%
1/4 (W1-2 phase excitation)	100%	0%
1/8 (2W1-2 phase excitation)	100%	0%
1/16 (4W1-2 phase excitation)	100%	0%

current direction is defined as follows.
OUT1A → OUT2A: Forward direction
OUT1B → OUT2B: Forward direction

4. 100% current settings (Current value)

100% current value is determined by Vref inputted from external part and the external resistance for detecting output current. Vref is doubled 1/3 inside IC.

$$Io\ (100\%) = (1/3 \times Vref) \div R_{NF}$$

The average current is lower than the calculated value because this IC has the method of peak current detection.

Pleas use the IC under the conditions as follows;

$0.11\Omega \leq R_{NF} \leq 0.5\Omega$, $0.3V \leq Vref \leq 1.95V$

5. OSC

Triangle wave is generated internally by CR oscillation by connecting external resistor to OSC terminal. Rosc should be from 30kΩ to 120kΩ. The relation of Rosc and fchop is shown in below table and figure. The values of fchop of the below table are design guarantee values. They are not tested for pre-shipment.

Rosc(kΩ)	fchop(kHz)		
	Min	Typ.	Max
30	-	60	-
51	-	40	-
120	-	20	-

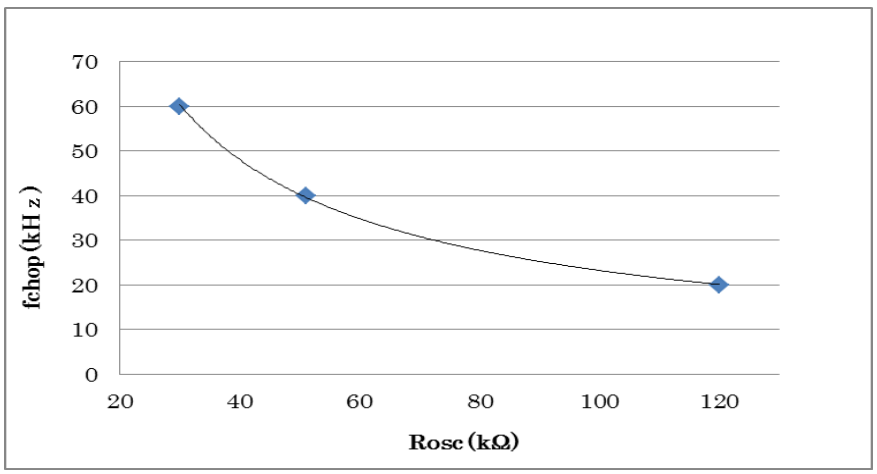

6. Decay Mode

It takes approximately five OSCM cycles for charging-discharging a current in PWM mode. The 40% fast decay mode is created by inducing decay during the last two cycles in Fast Decay mode.
The ratio 40% of the fast decay mode is always fixed.
The relation between the master clock frequency (fMCLK), the OSCM frequency (fOSCM) and the PWM frequency (fchop) is shown as follows:

fOSCM = 1/20 ×fMCLK
fchop = 1/100 ×fMCLK

When Rosc=51kΩ, the master clock=4MHz, OSCM=200kHz, the frequency of PWM(fchop)=40kHz.

6-1. Current Waveform and Mixed Decay Mode settings

The period of PWM operation is equal to five periods of OSCM.
The ratio 40% of the fast decay mode is always fixed.
The "NF" refers to the point at which the output current reaches its predefined current level.

MDT means the point of MDT (MIXED DECAY TIMMING) in the below diagram.

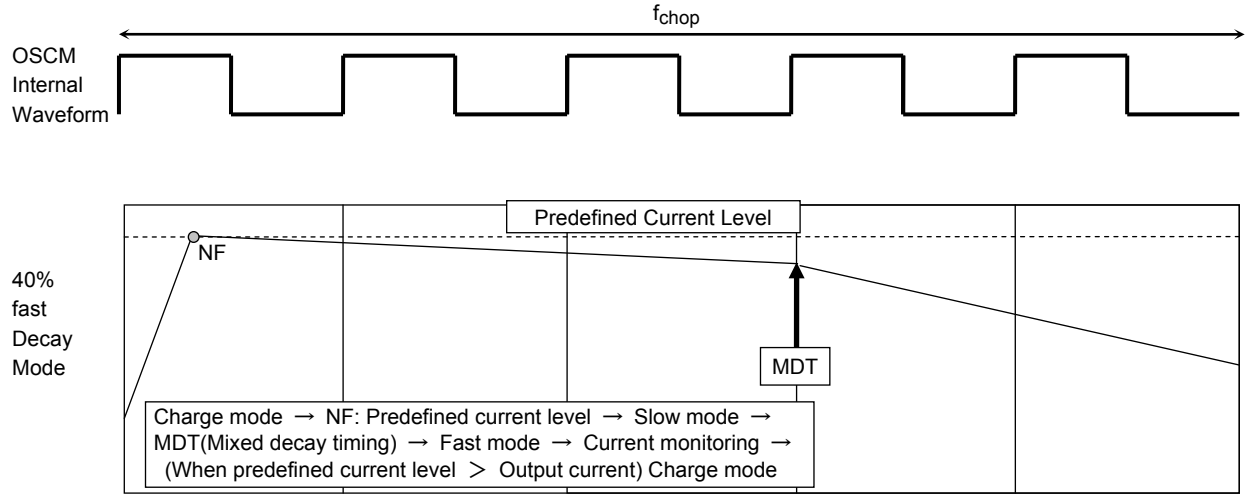

6-2. Effect of Decay Mode

- Increasing the current (sine wave)

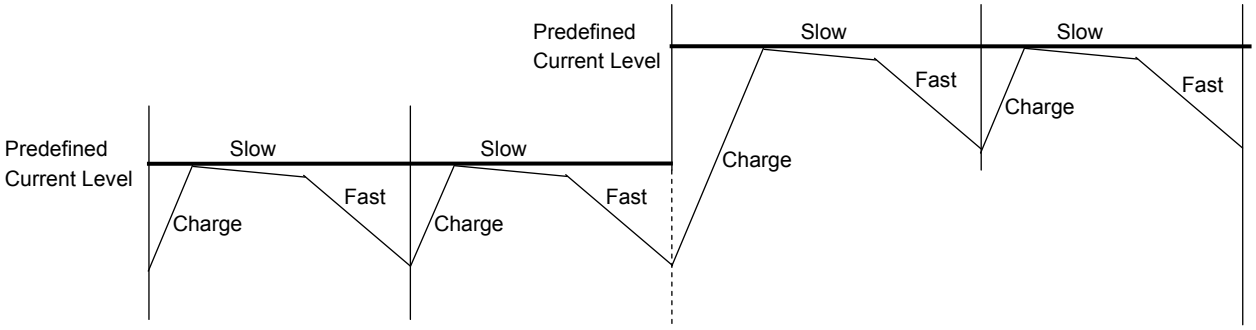

- Decreasing the current (In case the current is decreased to the predefined value in a short time because it decays quickly.)

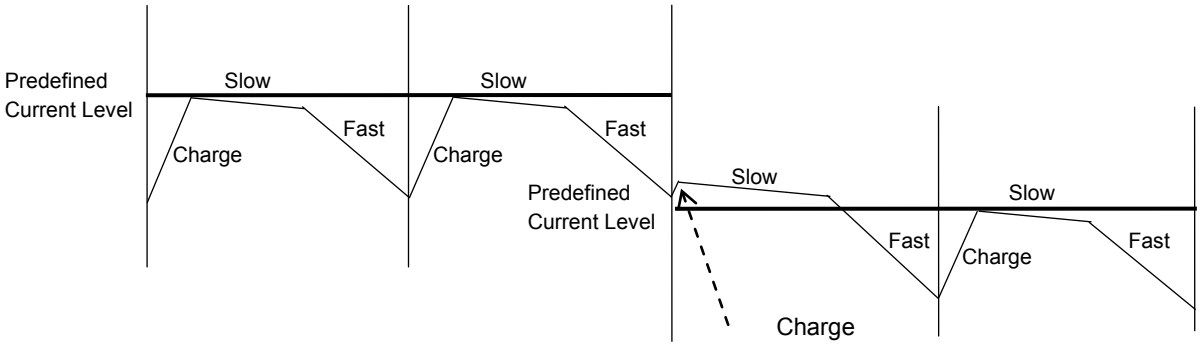

Even if the output current rises above the predefined current at the RNF point, the current control mode is briefly switched to Charge mode for current sensing.

- Decreasing the current (In case it takes a long time to decrease the current to the predefined value because the current decays slowly.)

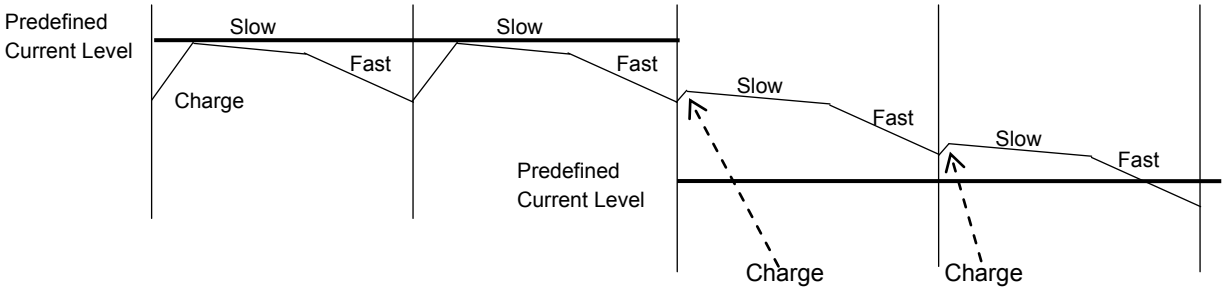

Even if the output current rises above the predefined current at the RNF point, the current control mode is briefly switched to Charge mode for current sensing.

During Mixed Decay and Fast Decay modes, if the predefined current level is less than the output current at the RNF (current monitoring point), the Charge mode in the next chopping cycle will disappear (though the current control mode is briefly switched to Charge mode in actual operations for current sensing) and the current is controlled in Slow and Fast Decay modes (mode switching from Slow Decay mode to Fast Decay mode at the MDT point).

Note: The above figures are rough illustration of the output current. In actual current waveforms, transient response curves can be observed.

6-3. Current Waveforms in Mixed Decay Mode

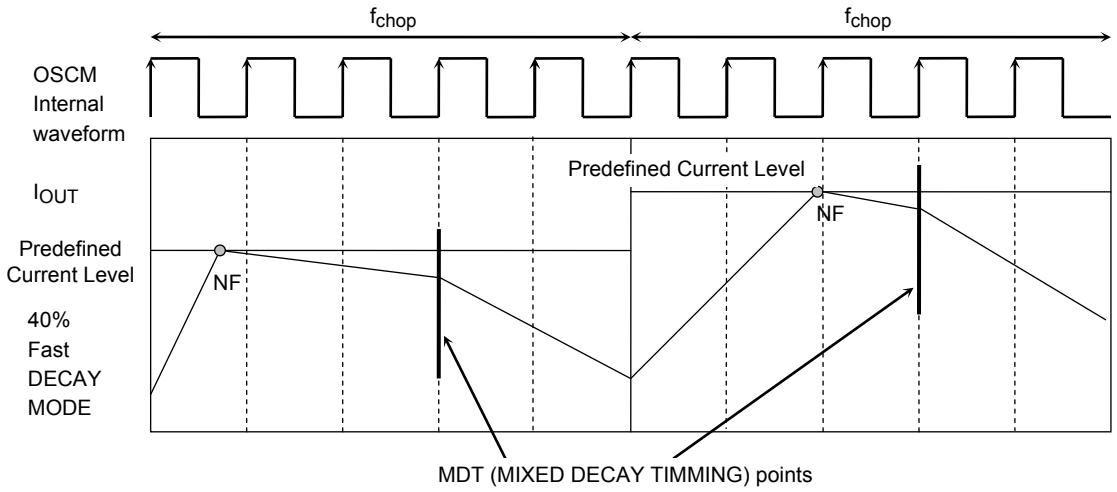

- When the NF points come after Mixed Decay Timing points

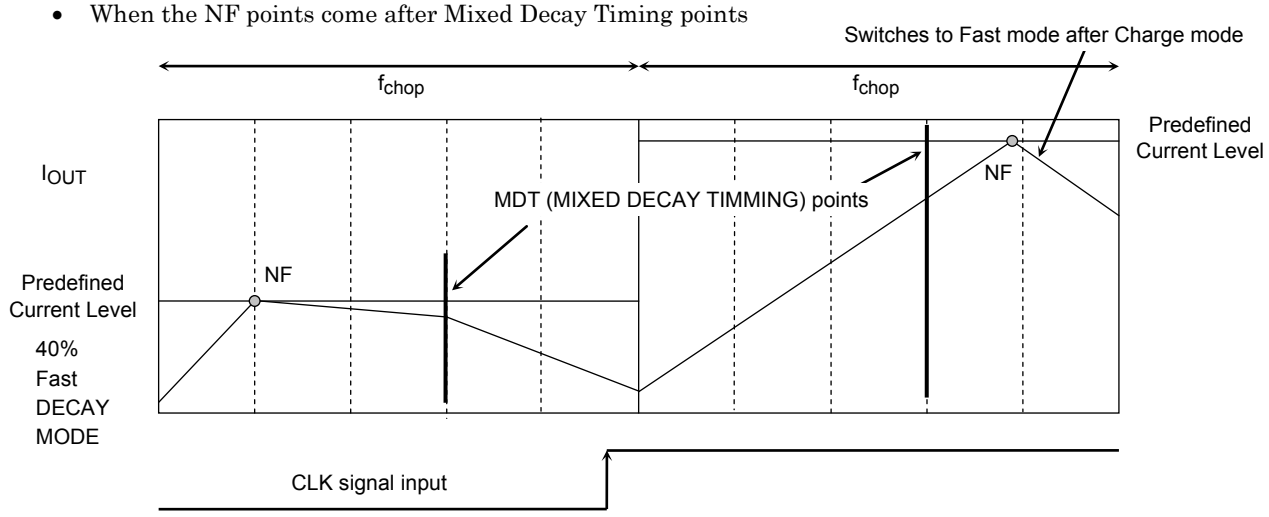

- When the output current value > predefined current level in Mixed Decay mode

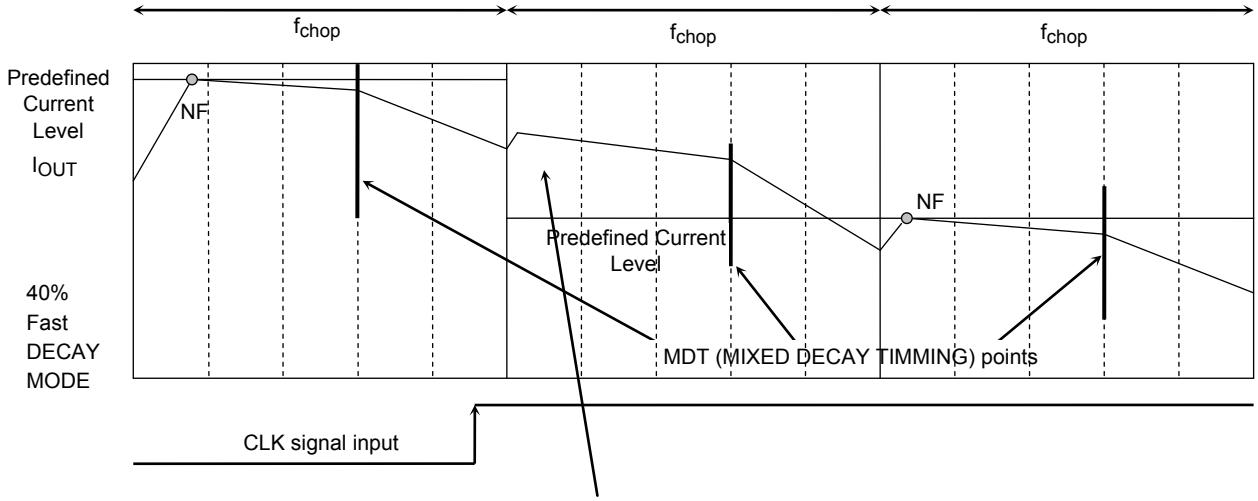

Even if the output current rises above the predefined current at the RNF point, the current control mode is briefly switched to Charge mode for current sensing.

Output Stage Transistor Operation Mode

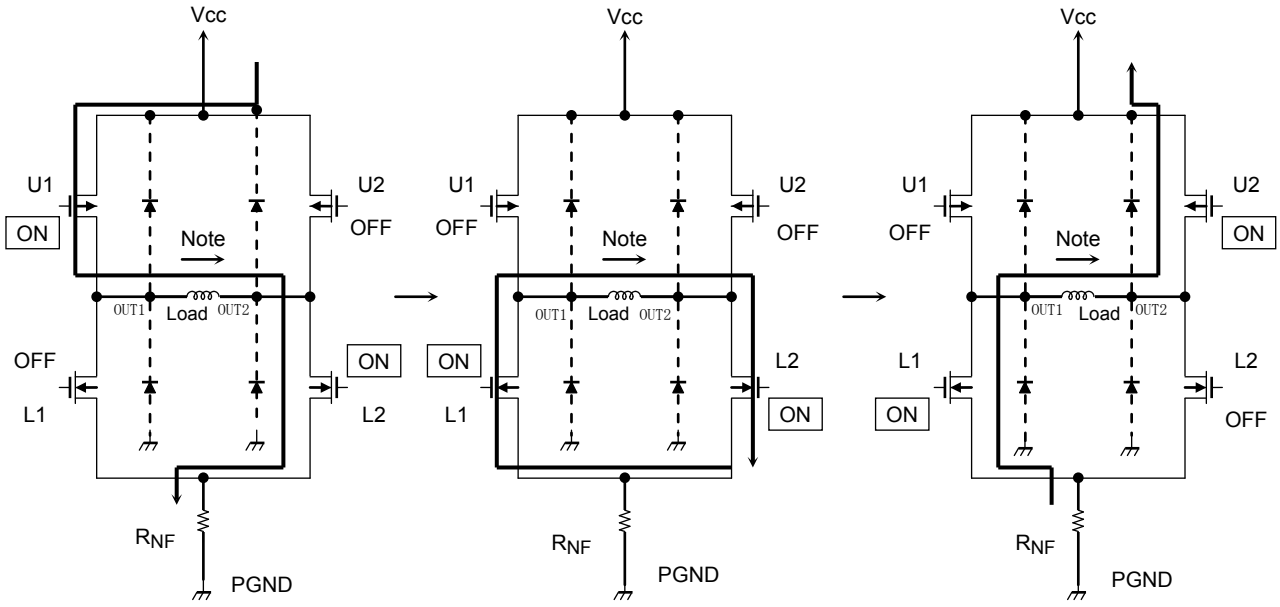

Charge Mode Slow Mode Fast Mode

Output Stage Transistor Operation Functions

CLK	U1	U2	L1	L2
CHARGE	ON	OFF	OFF	ON
SLOW	OFF	OFF	ON	ON
FAST	OFF	ON	ON	OFF

Note: The above chart shows an example of when the current flows as indicated by the arrows in the above figures. If the current flows in the opposite direction, refer to the following chart:

CLK	U1	U2	L1	L2
CHARGE	OFF	ON	ON	OFF
SLOW	OFF	OFF	ON	ON
FAST	ON	OFF	OFF	ON

Upon transitions of above-mentioned functions, a dead time of about 300 ns (Design guarantee value) is inserted respectively.

Thermal Shut-Down circuit (TSD)

(1) Automatic return

TSD = 160°C (typ.) (Note)

TSDhys = 70°C (typ.) (Note)

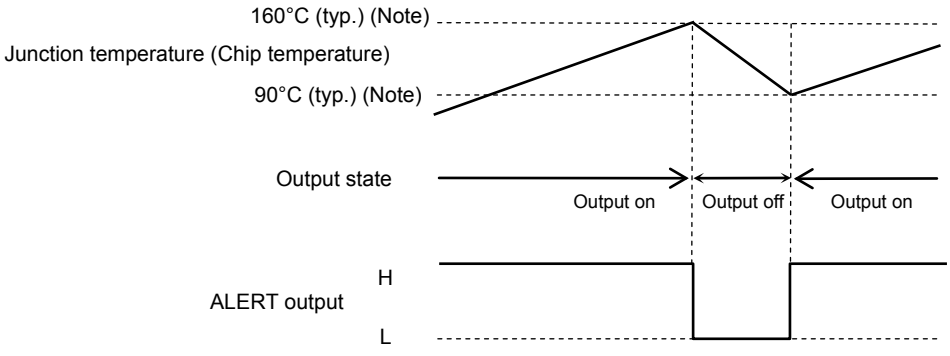

Automatic return has a temperature hysteresis shown in the above figure.

In case of automatic return, the return timing is adjusted at charge start of fchop after the temperature falls to the return temperature (90°C (typ.) in the above figure).

The return period after the temperature falls corresponds to one cycle to two cycles of fchop.

(2) Latch type

TSD = 160°C (typ.) (Note)

(*)Output current starts rising at the timing of PWM frequency just after ENABLE pin outputs high.

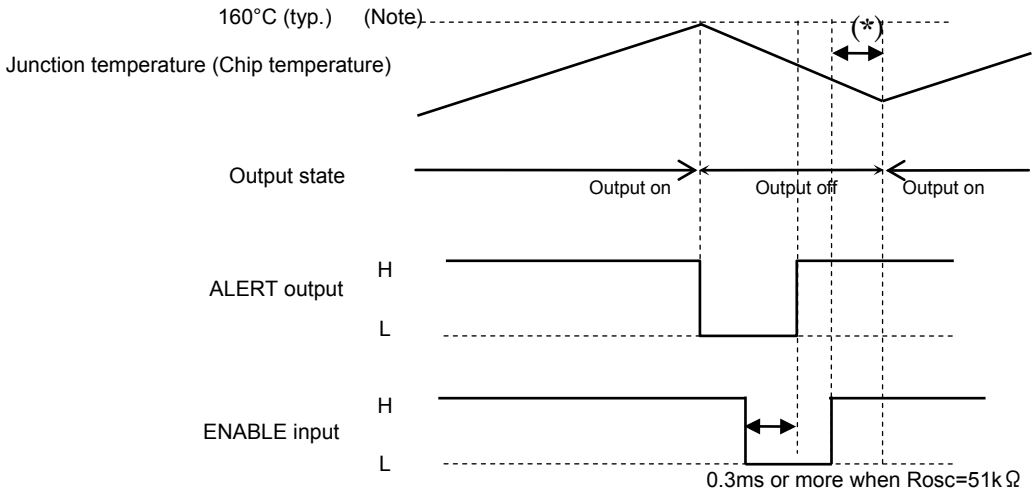

The operation returns by programming the ENABLE as H → L → H shown in above figure or turning on power supply and turning on UVLO function. In this time, term of L level of ENABLE should be 0.3ms or more.

To recover the operation, the junction temperature (the chip temperature) should be 90°C or less when ENABLE input is switched from L to H level. Otherwise, the operation does not recover.

Note: Pre-shipment testing is not performed.

・State of internal IC when TSD circuit operates.

The states of the internal IC and outputs, while the shutdown circuit is operating, correspond to the state when ENABLE is L.

The state after automatic return corresponds to the state when ENABLE is H. Please configure the Reset L to rotate the motor from the initial state.

Latch/Auto is an input pin for determining the return method of TSD.
If Latch/Auto pin outputs low, TSD function returns by either of turning on power supply again or programming the ENABLE as H → L → H.
If Latch/Auto pin outputs high, it returns automatically.
In standby mode, TSD function returns automatically regardless of the state of the Latch/Auto pin.
When power supply voltage Vcc is less than 8V, TSD function cannot operate regardless of the state of the Latch/Auto pin.

ISD (Over current detection)

Current that flows through output power MOSFETs are monitored individually. If over-current is detected in at least one of the eight output power MOSFETs, all output power MOSFETs are turned off then this status is kept until ENABLE signal is input. In this time, term of L level of ENABLE should be 0.3ms or more.

Masking term of 1μs or more (typ. when Rosc=51kΩ) (Note) should be provided in order to protect detection error by noise. ISD does not work during the masking term.

Over current detection value ISD=6.5 A (Note)

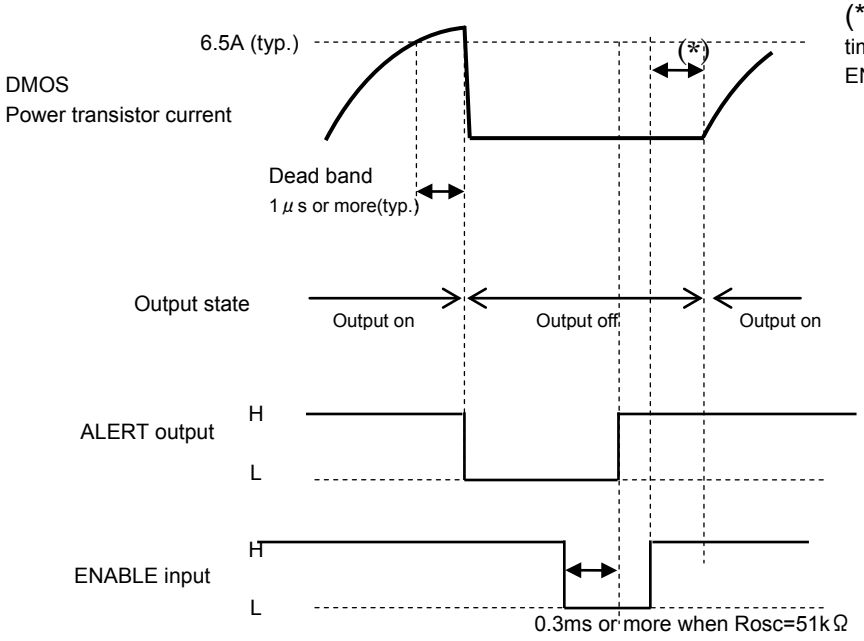

(*)Output current starts rising at the timing of PWM frequency just after ENABLE pin outputs high.

The operation returns by programming the ENABLE as H → L → H shown in above figure or turning on power supply and turning on UVLO function.

Note: Pre-shipment testing is not performed.

・State of internal IC when ISD circuit operates.

The states of the internal IC and outputs, while the over current detection circuit is operating, correspond to the state when ENABLE is L.

The state after automatic return corresponds to the state when ENABLE is H. Please configure the Reset L to rotate the motor from the initial state.

Return method of ISD

ISD function returns by either of turning on power supply again or programming the ENABLE as H → L → H regardless of the state of the Latch/Auto pin.

In standby mode, ISD function cannot operate.

When power supply voltage Vcc is less than 8V, ISD function cannot operate.

Under Voltage Lock Out (UVLO) circuit

Outputs are shutoff by operating at 5.5 V (Typ.) of Vcc or less.

It has a hysteresis of 0.5 V (Typ.) and returns to output when Vcc reaches 6.0 V (Typ.). The following values are design guarantee values.

・State of internal IC when UVLO circuit operates.

The states of the internal IC and outputs correspond to the state in the ENABLE mode and the initial mode at the same time.

After a return, it can start from the initial mode.

When Vcc falls to around 5.5 V and UVLO operates, output turns off.

It recovers automatically from the initial mode when both Vcc rise to around 6.0 V or more. The following values are design guarantee values.

ALERT output

ALERT terminal outputs low in detecting either TSD or ISD.

ALERT terminal is connected to power supply externally via pull-up resistance.
V_{ALERT} = 0.5 V (max) at 1 mA

TSD	ISD	ALERT
Under TSD detection	Under ISD detection	Low
Normal	Under ISD detection	
Under TSD detection	Normal	
Normal	Normal	Z

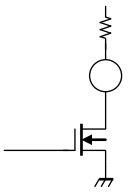

Applied voltage to pull-up resistance is up to 5.5 V. And conducted current is up to 1 mA.
It is recommended to gain 5 V by connecting the external pull-up resistance to Vreg pin.

MO output

MO turns on at the predetermined state and output low.
MO terminal is connected to power supply externally via pull-up resistance.
V_{MO} = 0.5 V (max) at 1 mA

State	MO
Initial	Low
Not initial	Z

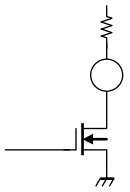

Applied voltage to pull-up resistance is up to 5.5 V. And conducted current is up to 1 mA.
It is recommended to gain 5 V by connecting the external pull-up resistance to Vreg pin.

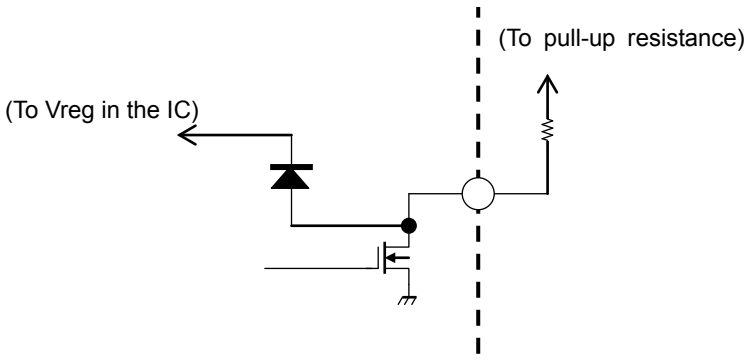

Voltage pull-up of MO and ALERT pins

・It is recommended to pull-up voltage to Vreg pin.
・In case of pull-up to except 5 V (for instance, 3.3 V etc.), it is recommended to use other power supply (ex. 3.3 V) while Vcc output between the operation range. When Vcc decreases lower than the operation range and Vreg decreases from 5 V to 0 V under the condition that other power supply is used to pull-up voltage, the current continues to conduct from other power supply to the IC inside through the diode shown in the figure. Though this phenomenon does not cause destruction and malfunction of the IC, please consider the set design not to continue such a state for a long time.
・As for the pull-up resistance for MO and ALERT pins, please select large resistance enough for the conducting current so as not to exceed the standard value of 1 mA.
Please use the resistance of 30 kΩ or more in case of applying 5 V, and 20 kΩ or more in case of applying 3.3 V.

Sequence and current level in each excitation mode

1/1-step Excitation Mode (M1: L, M2: L, M3: H, CW Mode)

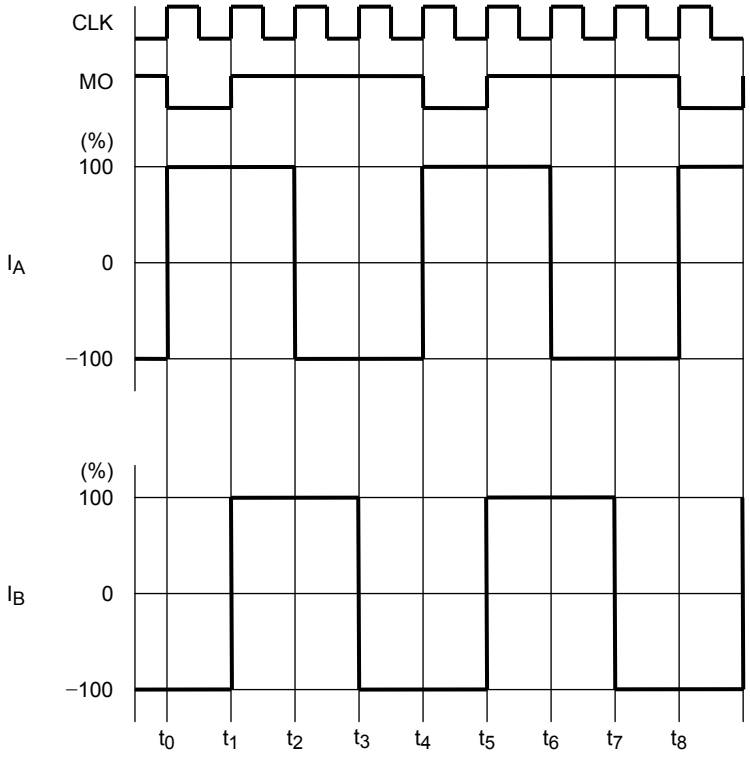

1/1-step Excitation Mode (M1: L, M2: L, M3: H, CCW Mode)

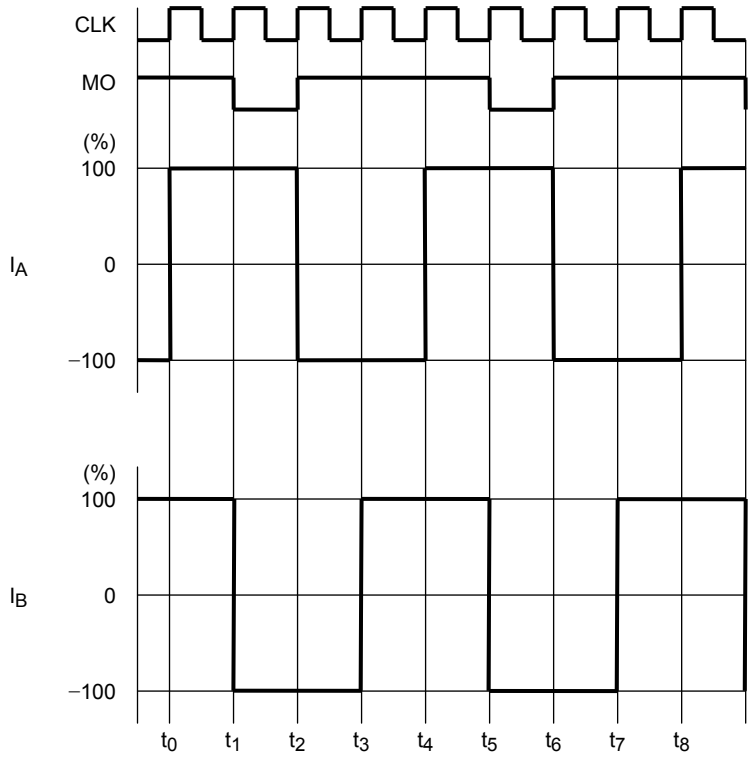

It operates from the initial state after the excitation mode is switched.

1/2-step Excitation Mode (A type) (M1: L, M2: H, M3: L, CW Mode)

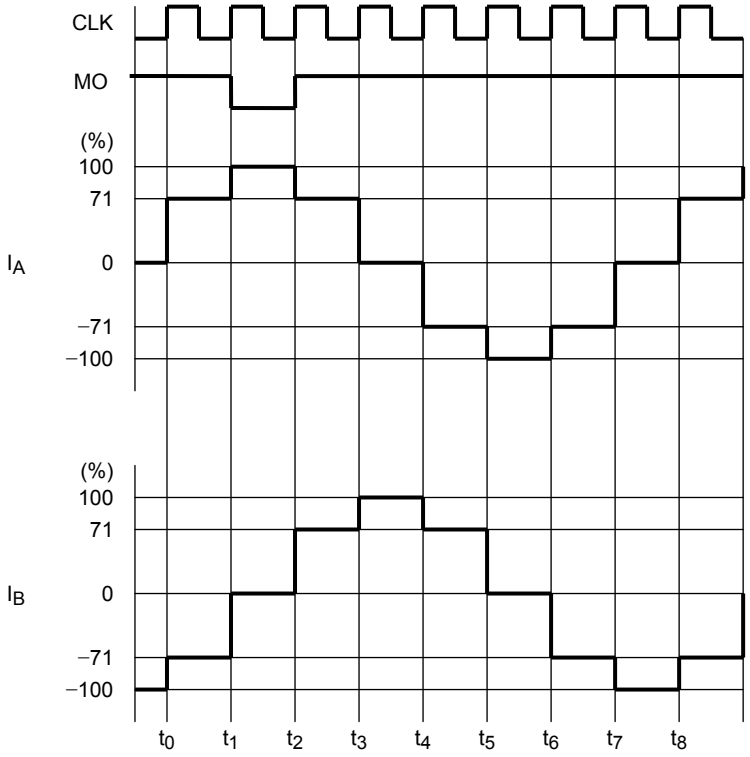

1/2-step Excitation Mode (A type) (M1: L, M2: H, M3: L, CCW Mode)

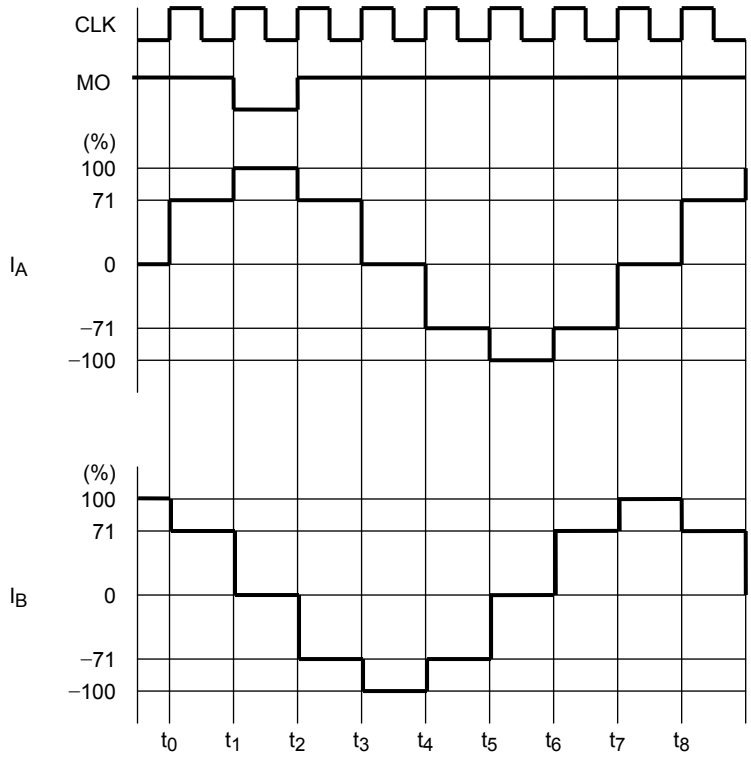

It operates from the initial state after the excitation mode is switched.

1/2-step Excitation Mode (B type) (M1: L, M2: H, M3: H, CW Mode)

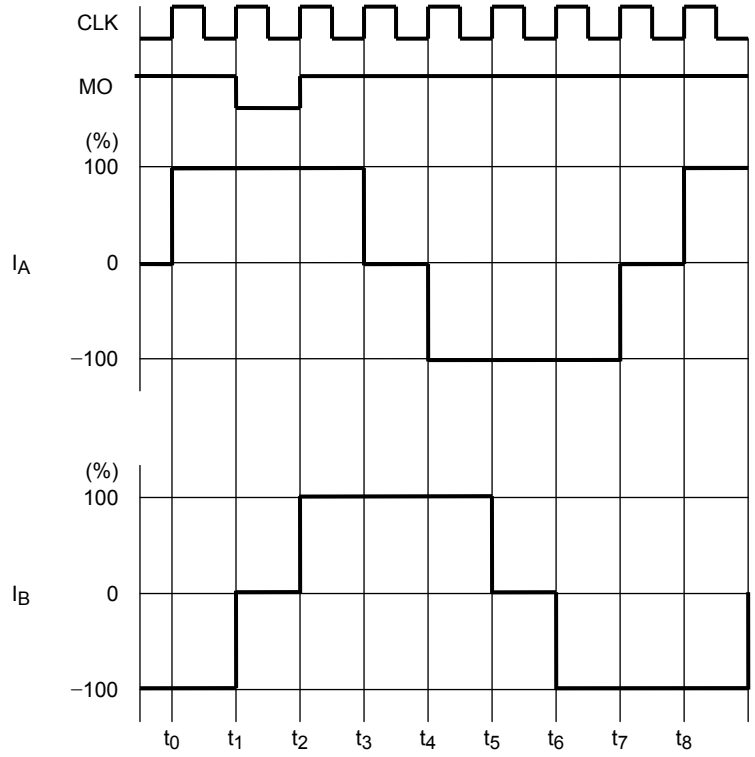

1/2-step Excitation Mode (B type) (M1: L, M2: H, M3: H, CCW Mode)

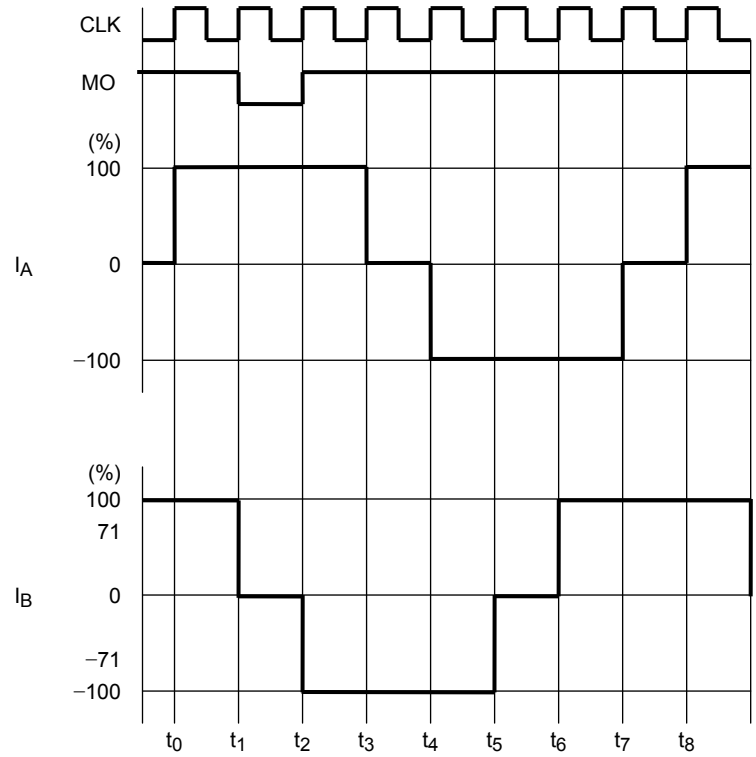

It operates from the initial state after the excitation mode is switched.

1/4-step Excitation Mode (M1: H, M2: L, M3: L, CW Mode)

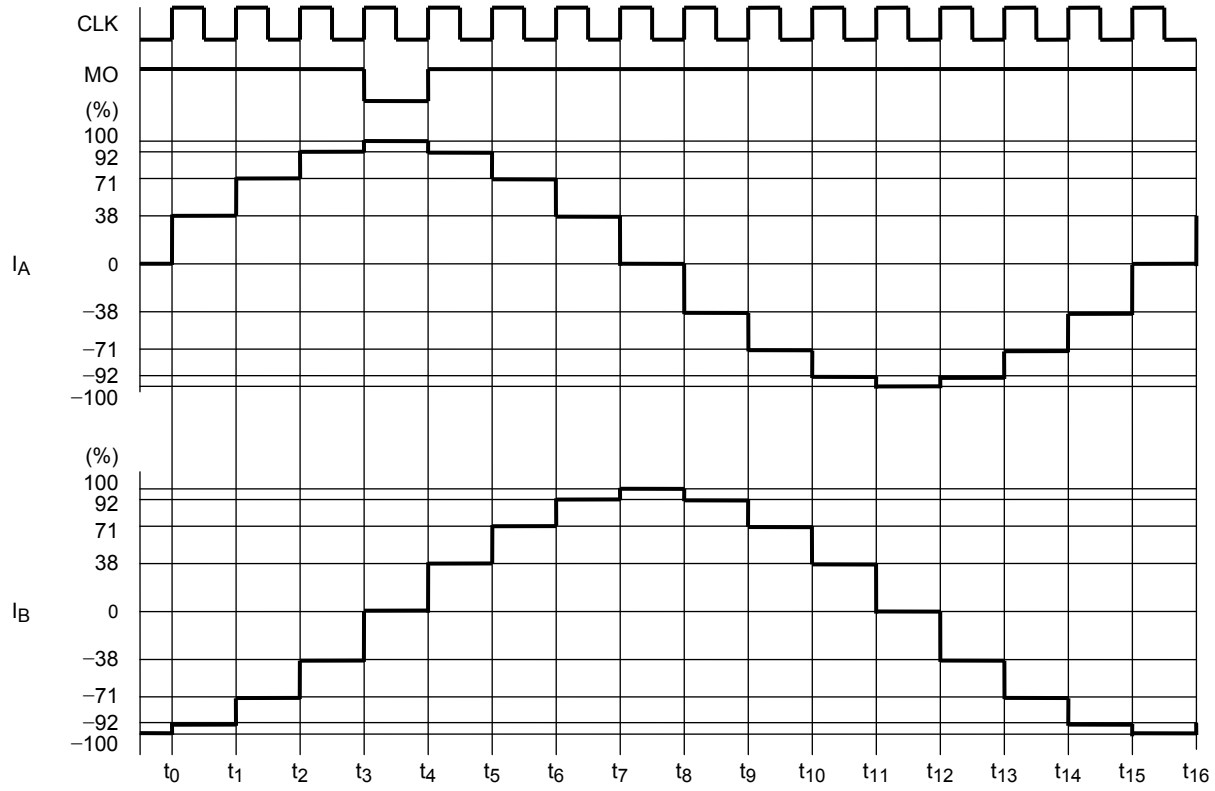

1/4-step Excitation Mode (M1: H, M2: L, M3: L, CCW Mode)

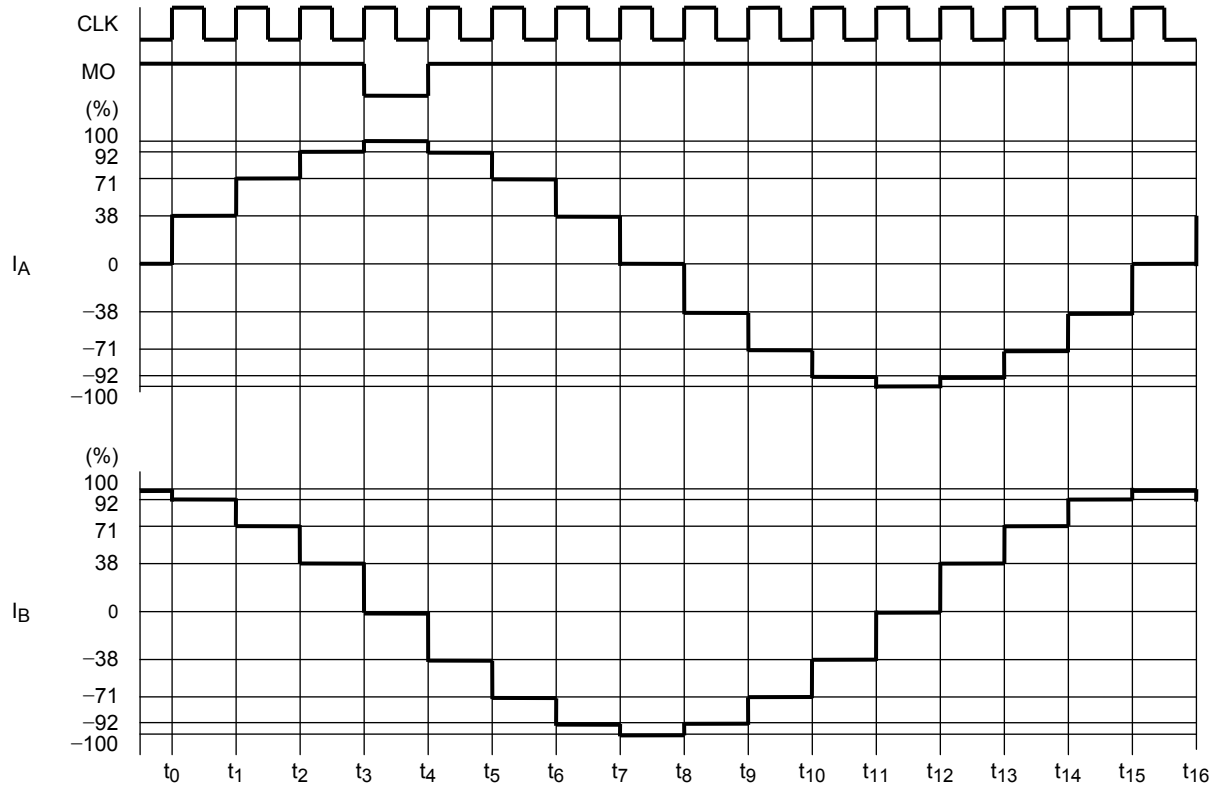

It operates from the initial state after the excitation mode is switched.

1/8-Step Excitation Mode (M1: H, M2: L, M3: H, CW Mode)

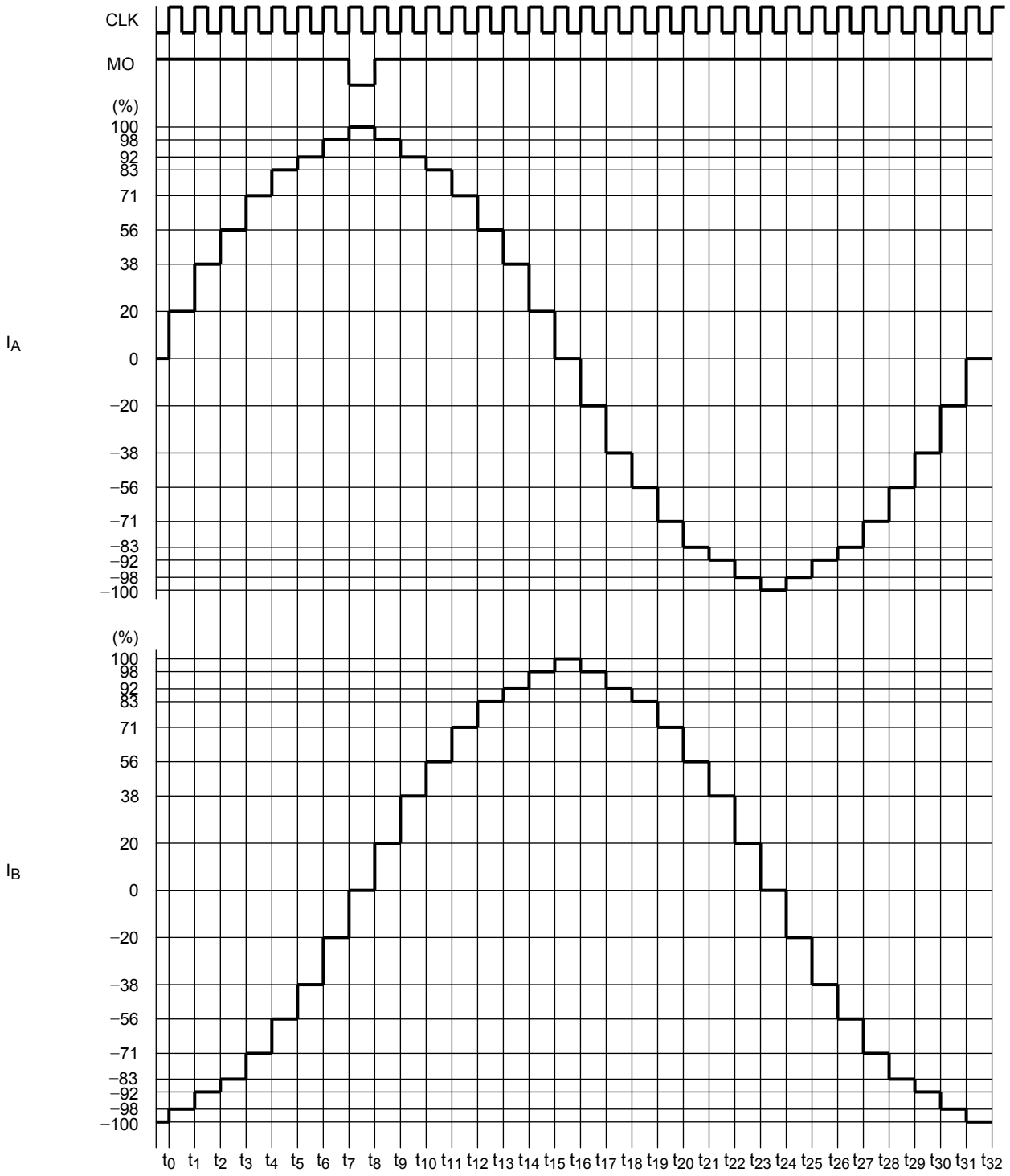

It operates from the initial state after the excitation mode is switched.

1/8-Step Excitation Mode (M1: H, M2: L, M3: H, CCW Mode)

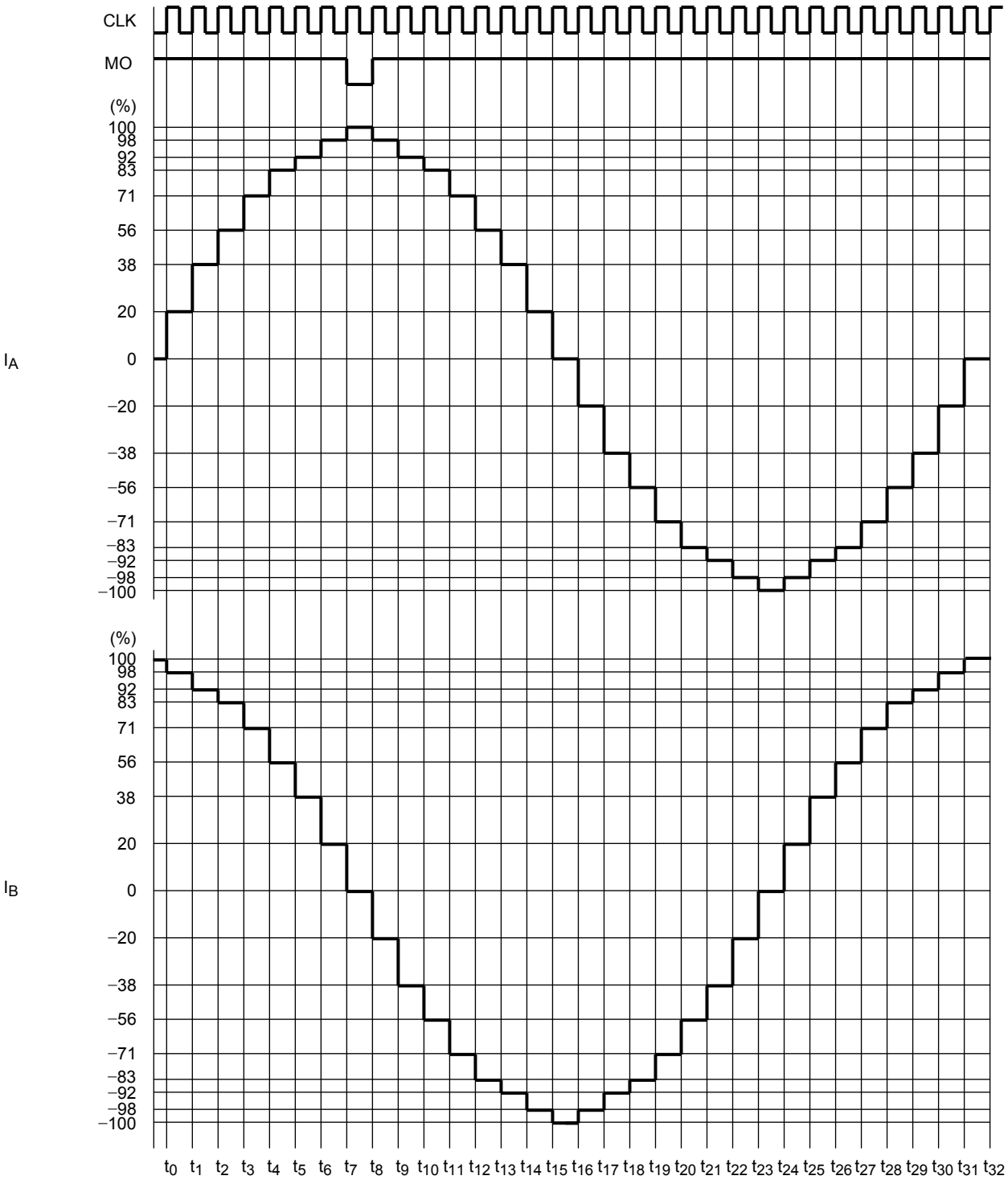

It operates from the initial state after the excitation mode is switched.

1/16-step Excitation Mode (M1: H, M2: H, M3: L, CW Mode)

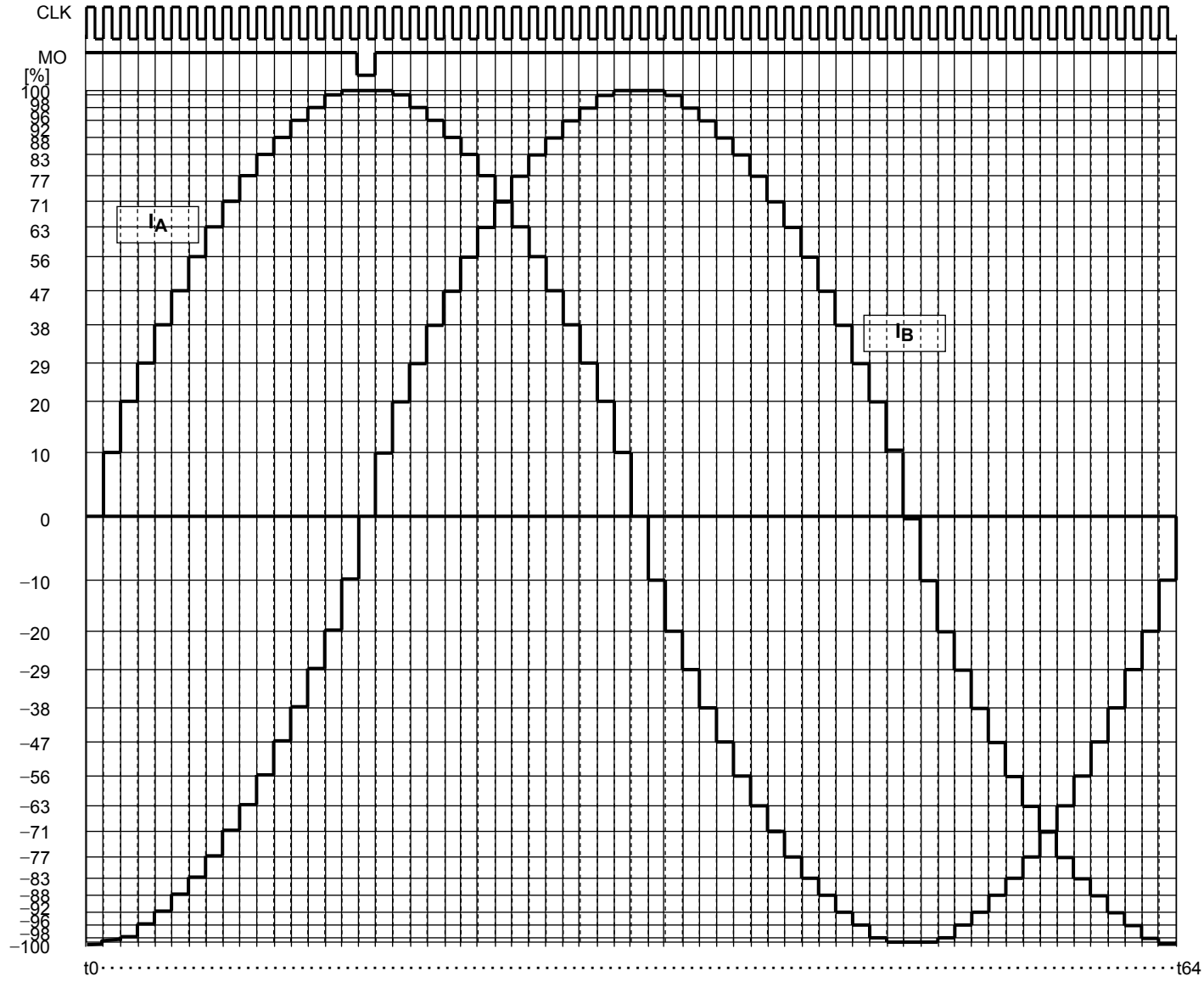

It operates from the initial state after the excitation mode is switched.

1/16-step Excitation Mode (M1: H, M2: H, M3: L, CCW Mode)

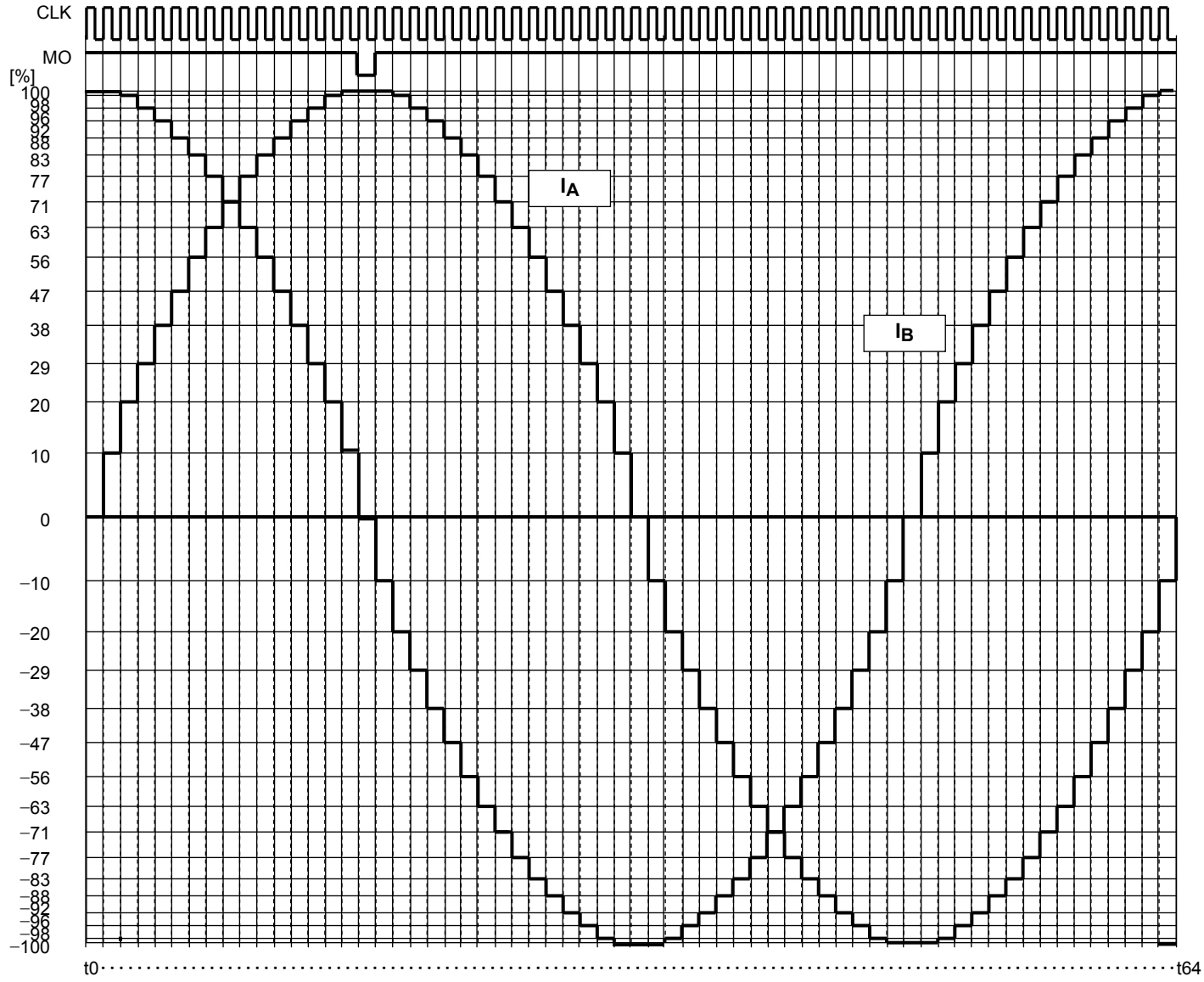

It operates from the initial state after the excitation mode is switched.

Current level

2-phase, 1-2-phase, W1-2-phase, 2W1-2-phase, 4W1-2-phase excitation (unit: %)

Current level (1/16, 1/8, 1/4, 1/2, 1/1)

1/16, 1/8, 1/4, 1/2, 1/1	Min.	Typ.	Max.	Unit
θ16	---	100.0	---	%
θ15	95.5	99.5	100.0	
θ14	94.1	98.1	100.0	
θ13	91.7	95.7	99.7	
θ12	88.4	92.4	96.4	
θ11	84.2	88.2	92.2	
θ10	79.1	83.1	87.1	
θ9	73.3	77.3	81.3	
θ8	66.7	70.7	74.7	
θ7	59.4	63.4	67.4	
θ6	51.6	55.6	59.6	
θ5	43.1	47.1	51.1	
θ4	34.3	38.3	42.3	
θ3	25.0	29.0	33.0	
θ2	15.5	19.5	23.5	
θ1	5.8	9.8	13.8	
θ0	---	0.0	---	

Absolute Maximum Ratings (Ta = 25°C)

Characteristic	Symbol	Rating	Unit
Power supply voltage	Vcc	50	V
Output current (per one phase)	I_O (PEAK)	5.0	A
Drain current (ALERT, MO)	$I_{(ALERT)}$	1	mA
	$I_{(MO)}$		
Input voltage	V_{IN}	6	V
Power dissipation	P_D	3.2 (Note 1)	W
		40 (Note 2)	
Operating temperature	T_{opr}	-30 to 85	°C
Storage temperature	T_{stg}	-55 to 150	°C

Note 1: Ta = 25°C, No heatsink

Note 2: Ta = 25°C, with infinite heatsink.

The absolute maximum ratings of a semiconductor device are a set of ratings that must not be exceeded, even for a moment. Do not exceed any of these ratings.
Exceeding the rating (s) may cause the device breakdown, damage or deterioration, and may result injury by explosion or combustion.
Please use the IC within the specified operating ranges.

Operating Range (Ta = −30~85°C)

Characteristic	Symbol	Test Condition	Min	Typ.	Max	Unit
Power supply voltage	Vcc	—	8.0	—	42	V
Output current	I_{OUT}	—	—	—	4.5	A
Input voltage	V_{IN}	—	0	—	5.5	V
	V_{ref}	—	0.3	—	1.95	V
Clock frequency in logical part	f_{CLK}	—	—	—	200	kHz
Chopping frequency	f_{chop}	See page 7.	20	40	60	kHz

Note: Two Vcc terminals should be programmed the same voltage.
The maximum current of the operating range can not be necessarily conducted depending on various conditions because output current is limited by the power dissipation P_D.
Make sure to avoid using the IC in the condition that would cause the temperature to exceed Tj (avg.) =107°C.

The power supply voltage of 42 V and the output current of 4.5 A are the maximum values of operating range. Please design the circuit with enough derating within this range by considering the power supply variation, the external resistance, and the electrical characteristics of the IC. In case of exceeding the power supply voltage of 42 V and the output current of 4.5 A, the IC will not operate normally.

Electrical Characteristics (Ta = 25°C, Vcc = 24 V)

Characteristic		Symbol	Test Condition	Min	Typ.	Max	Unit
Input voltage	High	$V_{IN\ (H)}$	M1, M2, M3, CW/CCW, CLK, RESET, ENABLE, Latch/Auto, TQ	2.0	—	5.5	V
	Low	$V_{IN\ (L)}$		-0.2	—	0.8	
Input hysteresis voltage		V_H		—	400	—	mV
Input current		$I_{IN\ (H)}$	M1, M2, M3, CW/CCW, CLK, RESET, ENABLE, Latch/Auto V_{IN} = 5.0 V	—	50	75	μA
			TQ, V_{IN} = 5.0 V	—	70	105	
		$I_{IN\ (L)}$	M1, M2, M3, CW/CCW, CLK, RESET, ENABLE, Latch/Auto, TQ V_{IN} = 0 V	—	—	1	
Vcc supply current		Icc_1	Output open, RESET: H, ENABLE: H、M1:L, M2:L, M3:H (1/1-step mode) CLK:L	—	4.2	7	mA
		Icc_2	Output open, RESET: L, ENABLE: L M1:L, M2:L, M3:H (1/1-step mode) CLK:L	—	3.6	7	
		Icc_3	Standby mode (M1:L, M2:L, M3:L)	—	1.8	4	
Vref input circuit	Current limit voltage	V_{NF}	Vref = 3.0 V(Note 1), TQ=H	0.9	1.0	1.1	V
	Input current	$I_{IN(V_{ref})}$	Vref = 3.0 V(Note 1)	—	—	1	μA
	Divider ratio	V_{ref}/V_{NF}	Maximum current: 100%, TQ=H	—	3	—	—
Minimum CLK pulse width		tw_{CLKH}	CLK	2.2	—	—	μs
		tw_{CLKL}					
Output residual voltage		V_{OL} MO	I_{OL} = 1 mA	—	—	0.5	V
		V_{OL} ALERT					
Internal constant voltage		Vreg	External capacitor = 0.1 μF (in standby mode)	4.5	5.0	5.5	V
Chopping frequency		f_{chop}	Rosc=51kΩ	28	40	52	kHz

Note 1: Though Vref of the test condition for pre-shipment is 3.0V, make sure to configure Vref within the operating range which is written in page 26 in driving the motor.

Electrical Characteristics (Ta = 25°C, Vcc = 24 V)

Characteristic		Symbol	Test Condition	Min	Typ.	Max	Unit
Output ON resistor		$Ron_U + Ron_L$	I_{OUT} = 4 A	—	0.4	0.6	Ω
Output transistor switching characteristics		t_r	V_{NF} = 0 V, Output: Open	—	50	—	ns
		t_f		—	500	—	
Output leakage current	Upper side	I_{LH}	Vcc = 50 V	—	—	5	μA
	Lower side	I_{LL}		—	—	5	

Timing Waveforms and Names

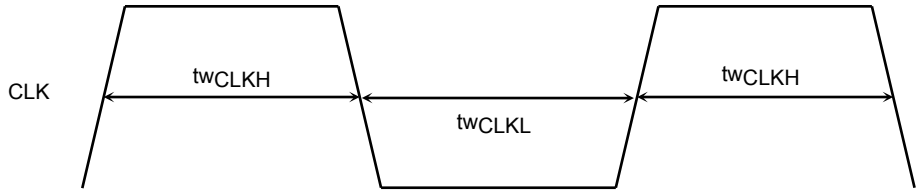

Figure 1 Timing Waveforms and Names

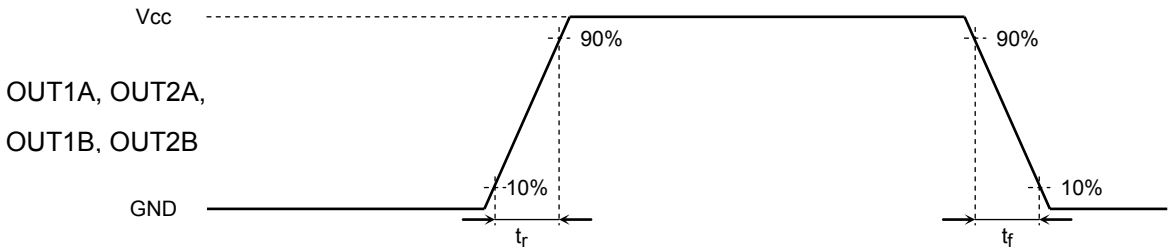

Figure 2 Timing Waveforms and Names

Power Dissipation

TB6600HG

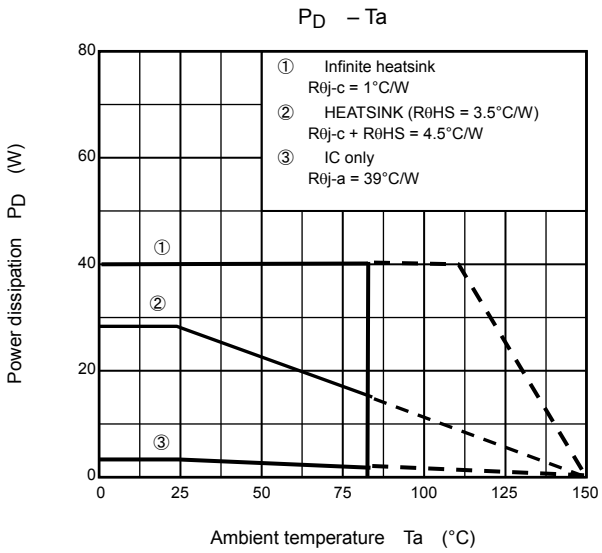

1. How to Turn on the Power

In applying Vcc or shutdown, ENABLE should be Low.
See Example 1(ENABLE = High → RESET = High) and Example 2(RESET = High → ENABLE = High) as follows. In example 1, a motor can start driving from the initial mode.

(1) CLK: Current step proceeds to the next mode with respect to every rising edge of CLK.
(2) ENABLE: It is in Hi-Z state in low level. It is output in high level.
RESET: It is in the initial mode (Phase A=100% and Phase B=0%) in low level.
①ENABLE=Low and RESET=Low: Hi-Z. Internal current setting is in initial mode.
②ENABLE=Low and RESET=High: Hi-Z. Internal current setting proceeds by internal counter.
③ENABLE=High and RESET=Low: Output in the initial mode (Phase A=100% and Phase B=0%).
④ENABLE=High and RESET=High: Output at the value which is determined by the internal counter.

<Recommended control input sequence>

(Example 1)

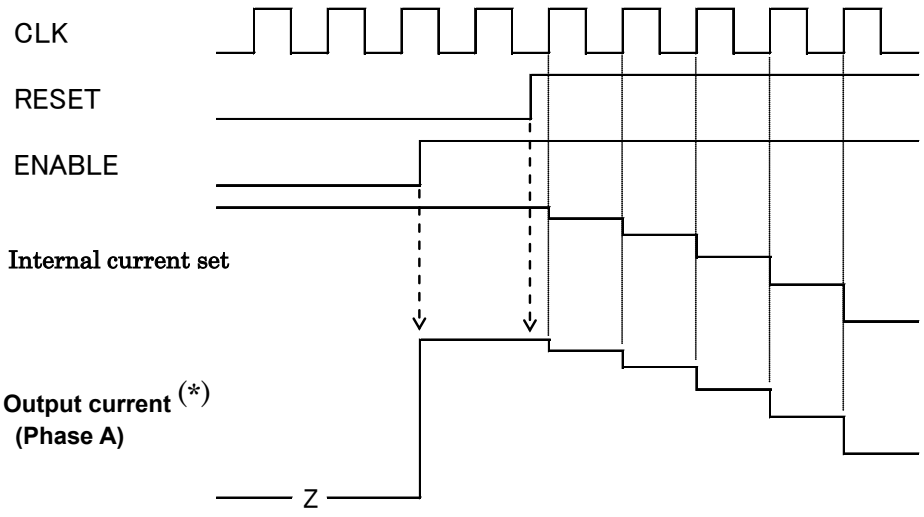

(Example 2)

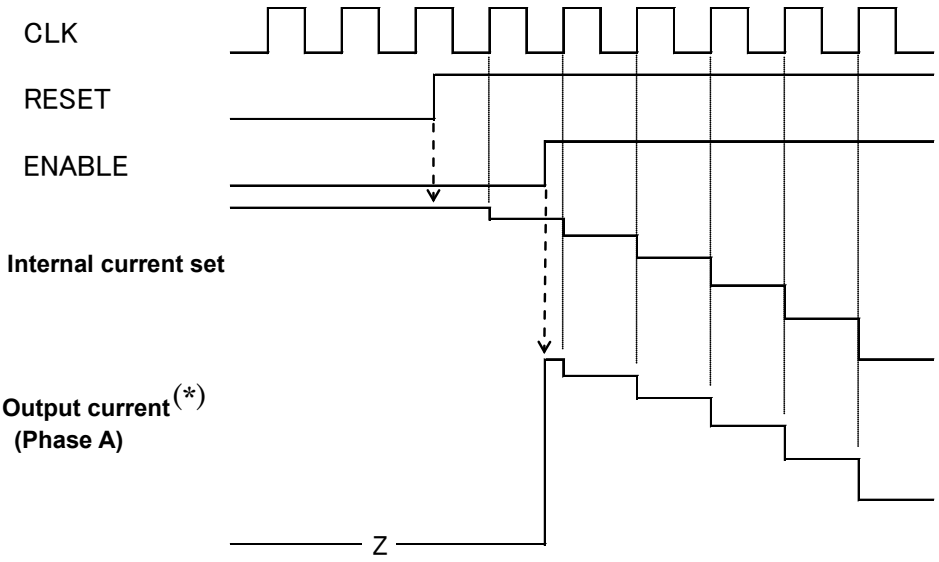

(* : Output current starts rising at the timing of PWM frequency just after ENABLE pin outputs high.)

Application Circuit

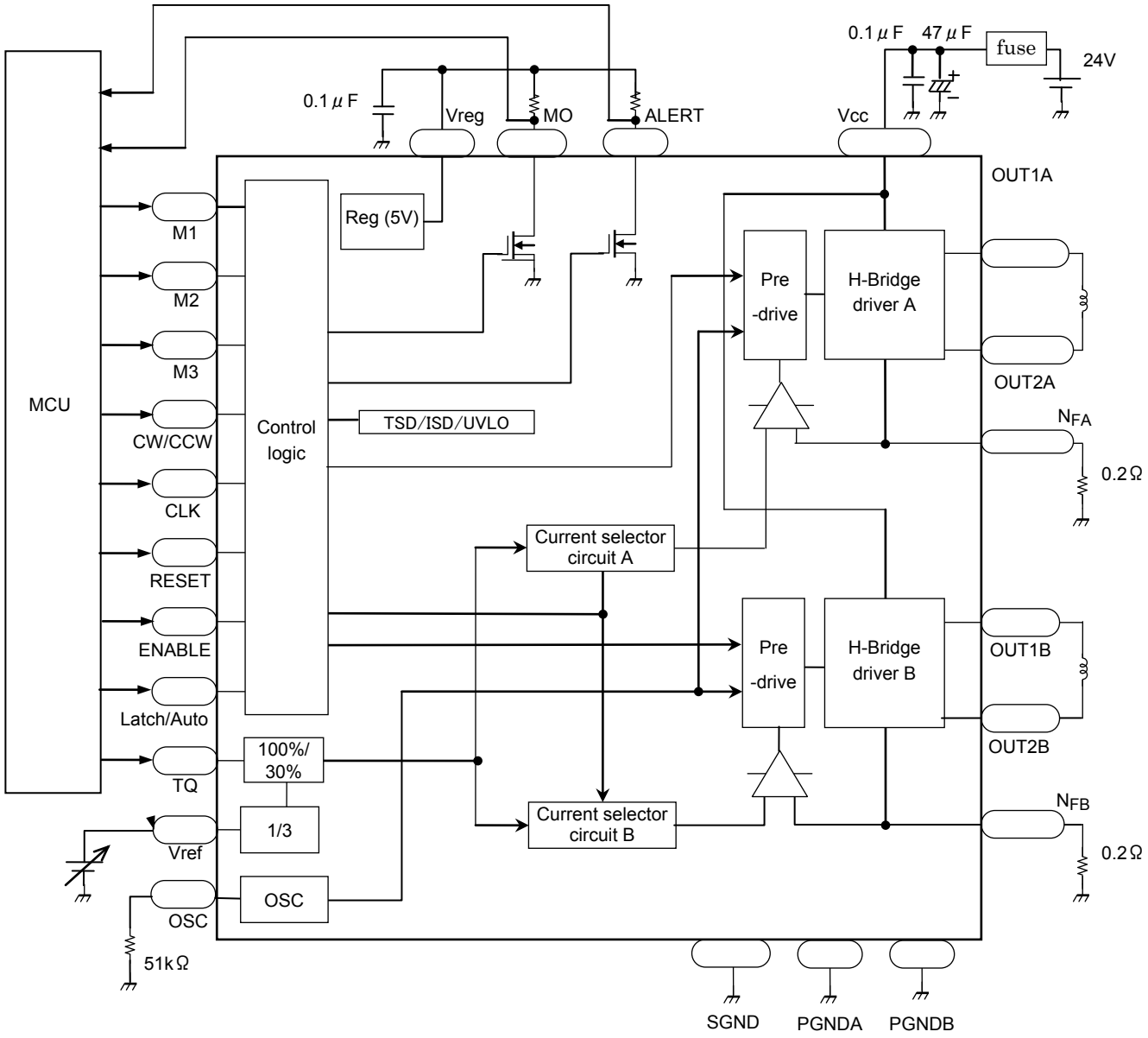

Note 1: Capacitors for the power supply lines should be connected as close to the IC as possible.

Note 2: Current detecting resistances (R_{NFA} and R_{NFB}) should be connected as close to the IC as possible.

Note 3: Pay attention for wire layout of PCB not to allow GND line to have large common impedance.

Note 4: External capacitor connecting to Vreg should be 0.1μF. Pay attention for the wire between this capacitor and Vreg terminal and the wire between this capacitor and SGND not to be influenced by noise.

Note 5: The IC may not operate normally when large common impedance is existed in GND line or the IC is easily influenced by noise. For example, if the IC operates continuously for a long time under the circumstance of large current and high voltage, the number of clock signals inputted to CLK terminal and that of steps of output current waveform may not proportional. And so, the IC may not operate normally. To avoid this malfunction, make sure to conduct Note.1 to Note.4 and evaluate the IC enough before using the IC.

Package Dimensions

Weight: 7.7 g (typ.)
Unit: mm

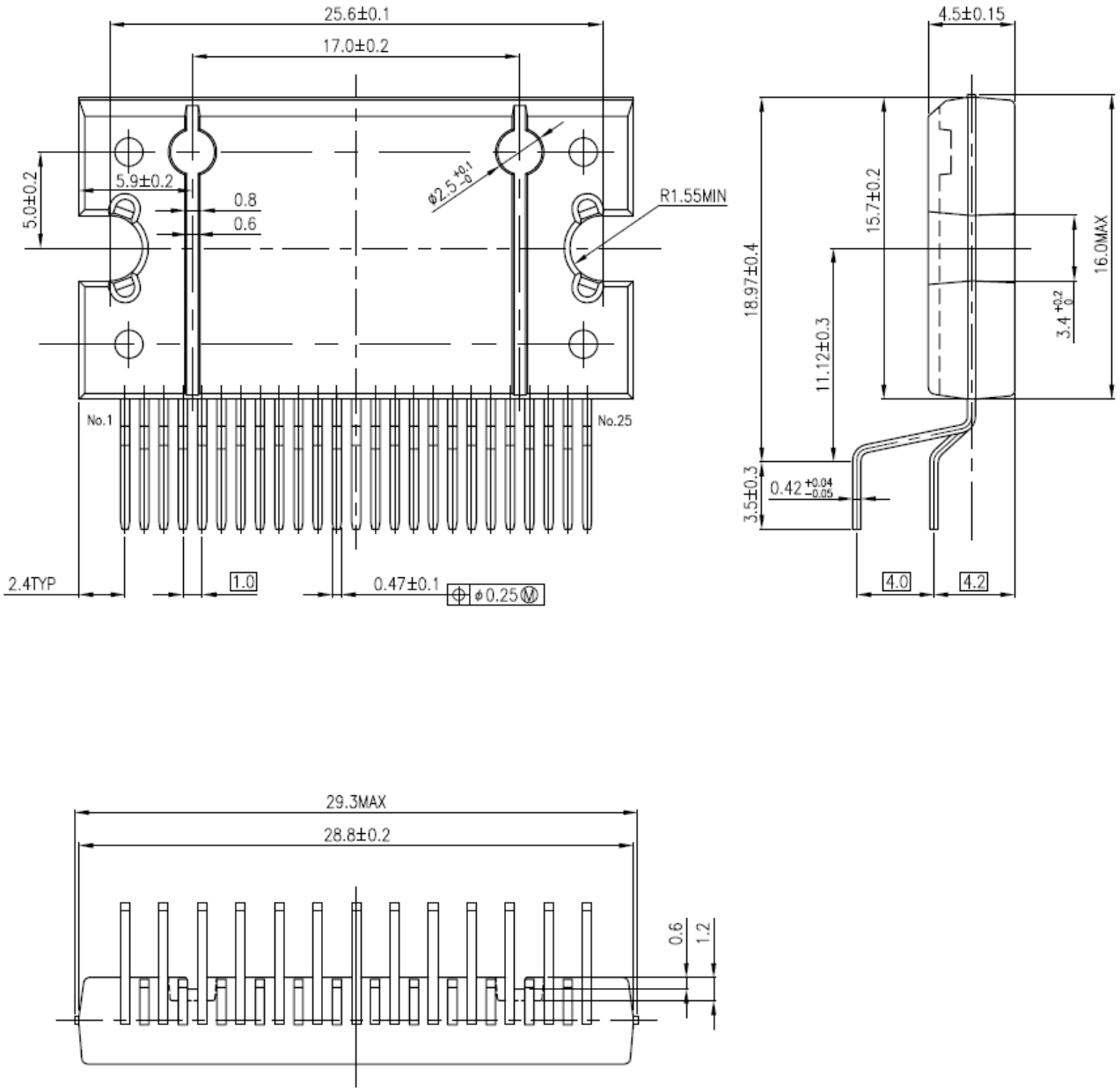

Notes on Contents

1. Block Diagrams

Some of the functional blocks, circuits, or constants in the block diagram may be omitted or simplified for explanatory purposes.

2. Equivalent Circuits

The equivalent circuit diagrams may be simplified or some parts of them may be omitted for explanatory purposes.

3. Timing Charts

Timing charts may be simplified for explanatory purposes.

4. Application Circuits

The application circuits shown in this document are provided for reference purposes only. Thorough evaluation is required, especially at the mass production design stage.

Toshiba does not grant any license to any industrial property rights by providing these examples of application circuits.

5. Test Circuits

Components in the test circuits are used only to obtain and confirm the device characteristics. These components and circuits are not guaranteed to prevent malfunction or failure from occurring in the application equipment.

IC Usage Considerations

Notes on handling of ICs

[1] The absolute maximum ratings of a semiconductor device are a set of ratings that must not be exceeded, even for a moment. Do not exceed any of these ratings.

Exceeding the rating(s) may cause the device breakdown, damage or deterioration, and may result injury by explosion or combustion.

[2] Use an appropriate power supply fuse to ensure that a large current does not continuously flow in case of over current and/or IC failure. The IC will fully break down when used under conditions that exceed its absolute maximum ratings, when the wiring is routed improperly or when an abnormal pulse noise occurs from the wiring or load, causing a large current to continuously flow and the breakdown can lead smoke or ignition. To minimize the effects of the flow of a large current in case of breakdown, appropriate settings, such as fuse capacity, fusing time and insertion circuit location, are required.

[3] If your design includes an inductive load such as a motor coil, incorporate a protection circuit into the design to prevent device malfunction or breakdown caused by the current resulting from the inrush current at power ON or the negative current resulting from the back electromotive force at power OFF. IC breakdown may cause injury, smoke or ignition.

Use a stable power supply with ICs with built-in protection functions. If the power supply is unstable, the protection function may not operate, causing IC breakdown. IC breakdown may cause injury, smoke or ignition.

[4] Do not insert devices in the wrong orientation or incorrectly.

Make sure that the positive and negative terminals of power supplies are connected properly.

Otherwise, the current or power consumption may exceed the absolute maximum rating, and exceeding the rating(s) may cause the device breakdown, damage or deterioration, and may result injury by explosion or combustion.

In addition, do not use any device that is applied the current with inserting in the wrong orientation or incorrectly even just one time.

Points to remember on handling of ICs

(1) Over current Detection Circuit

Over current detection circuits (referred to as current limiter circuits) do not necessarily protect ICs under all circumstances. If the over current detection circuits operate against the over current, clear the over current status immediately.

Depending on the method of use and usage conditions, such as exceeding absolute maximum ratings can cause the over current detection circuit to not operate properly or IC breakdown before operation. In addition, depending on the method of use and usage conditions, if over current continues to flow for a long time after operation, the IC may generate heat resulting in breakdown.

(2) Thermal Shutdown Circuit

Thermal shutdown circuits do not necessarily protect ICs under all circumstances. If the thermal shutdown circuits operate against the over temperature, clear the heat generation status immediately.

Depending on the method of use and usage conditions, such as exceeding absolute maximum ratings can cause the thermal shutdown circuit to not operate properly or IC breakdown before operation.

(3) Heat Radiation Design

In using an IC with large current flow such as power amp, regulator or driver, please design the device so that heat is appropriately radiated, not to exceed the specified junction temperature (T_j) at any time and condition. These ICs generate heat even during normal use. An inadequate IC heat radiation design can lead to decrease in IC life, deterioration of IC characteristics or IC breakdown. In addition, please design the device taking into considerate the effect of IC heat radiation with peripheral components.

(4) Back-EMF

When a motor rotates in the reverse direction, stops or slows down abruptly, a current flow back to the motor's power supply due to the effect of back-EMF. If the current sink capability of the power supply is small, the device's motor power supply and output pins might be exposed to conditions beyond absolute maximum ratings. To avoid this problem, take the effect of back-EMF into consideration in system design.

(5) Short-circuiting between outputs, air contamination faults, faults due to improper grounding, short-circuiting between contiguous pins

Utmost care is necessary in the design of the power supply lines, GND lines, and output lines since the IC may be destroyed by short-circuiting between outputs, air contamination faults, or faults due to improper grounding, or by short-circuiting between contiguous pins. They may destroy not only the IC but also peripheral parts and may contribute to injuries for users. Over current may continue to flow in the IC because of this destruction and cause smoke or ignition of the IC. Expect the volume of this over current and add an appropriate power supply fuse in order to minimize the effects of the over current. Capacity of the fuse, fusing time, and the inserting position in the circuit should be configured suitably.

RESTRICTIONS ON PRODUCT USE

- Toshiba Corporation, and its subsidiaries and affiliates (collectively "TOSHIBA"), reserve the right to make changes to the information in this document, and related hardware, software and systems (collectively "Product") without notice.
- This document and any information herein may not be reproduced without prior written permission from TOSHIBA. Even with TOSHIBA's written permission, reproduction is permissible only if reproduction is without alteration/omission.
- Though TOSHIBA works continually to improve Product's quality and reliability, Product can malfunction or fail. Customers are responsible for complying with safety standards and for providing adequate designs and safeguards for their hardware, software and systems which minimize risk and avoid situations in which a malfunction or failure of Product could cause loss of human life, bodily injury or damage to property, including data loss or corruption. Before customers use the Product, create designs including the Product, or incorporate the Product into their own applications, customers must also refer to and comply with (a) the latest versions of all relevant TOSHIBA information, including without limitation, this document, the specifications, the data sheets and application notes for Product and the precautions and conditions set forth in the "TOSHIBA Semiconductor Reliability Handbook" and (b) the instructions for the application with which the Product will be used with or for. Customers are solely responsible for all aspects of their own product design or applications, including but not limited to (a) determining the appropriateness of the use of this Product in such design or applications; (b) evaluating and determining the applicability of any information contained in this document, or in charts, diagrams, programs, algorithms, sample application circuits, or any other referenced documents; and (c) validating all operating parameters for such designs and applications. **TOSHIBA ASSUMES NO LIABILITY FOR CUSTOMERS' PRODUCT DESIGN OR APPLICATIONS.**
- **PRODUCT IS NEITHER INTENDED NOR WARRANTED FOR USE IN EQUIPMENTS OR SYSTEMS THAT REQUIRE EXTRAORDINARILY HIGH LEVELS OF QUALITY AND/OR RELIABILITY, AND/OR A MALFUNCTION OR FAILURE OF WHICH MAY CAUSE LOSS OF HUMAN LIFE, BODILY INJURY, SERIOUS PROPERTY DAMAGE AND/OR SERIOUS PUBLIC IMPACT ("UNINTENDED USE").** Except for specific applications as expressly stated in this document, Unintended Use includes, without limitation, equipment used in nuclear facilities, equipment used in the aerospace industry, medical equipment, equipment used for automobiles, trains, ships and other transportation, traffic signaling equipment, equipment used to control combustions or explosions, safety devices, elevators and escalators, devices related to electric power, and equipment used in finance-related fields. **IF YOU USE PRODUCT FOR UNINTENDED USE, TOSHIBA ASSUMES NO LIABILITY FOR PRODUCT.** For details, please contact your TOSHIBA sales representative.
- Do not disassemble, analyze, reverse-engineer, alter, modify, translate or copy Product, whether in whole or in part.
- Product shall not be used for or incorporated into any products or systems whose manufacture, use, or sale is prohibited under any applicable laws or regulations.
- The information contained herein is presented only as guidance for Product use. No responsibility is assumed by TOSHIBA for any infringement of patents or any other intellectual property rights of third parties that may result from the use of Product. No license to any intellectual property right is granted by this document, whether express or implied, by estoppel or otherwise.
- **ABSENT A WRITTEN SIGNED AGREEMENT, EXCEPT AS PROVIDED IN THE RELEVANT TERMS AND CONDITIONS OF SALE FOR PRODUCT, AND TO THE MAXIMUM EXTENT ALLOWABLE BY LAW, TOSHIBA (1) ASSUMES NO LIABILITY WHATSOEVER, INCLUDING WITHOUT LIMITATION, INDIRECT, CONSEQUENTIAL, SPECIAL, OR INCIDENTAL DAMAGES OR LOSS, INCLUDING WITHOUT LIMITATION, LOSS OF PROFITS, LOSS OF OPPORTUNITIES, BUSINESS INTERRUPTION AND LOSS OF DATA, AND (2) DISCLAIMS ANY AND ALL EXPRESS OR IMPLIED WARRANTIES AND CONDITIONS RELATED TO SALE, USE OF PRODUCT, OR INFORMATION, INCLUDING WARRANTIES OR CONDITIONS OF MERCHANTABILITY, FITNESS FOR A PARTICULAR PURPOSE, ACCURACY OF INFORMATION, OR NONINFRINGEMENT.**
- Do not use or otherwise make available Product or related software or technology for any military purposes, including without limitation, for the design, development, use, stockpiling or manufacturing of nuclear, chemical, or biological weapons or missile technology products (mass destruction weapons). Product and related software and technology may be controlled under the applicable export laws and regulations including, without limitation, the Japanese Foreign Exchange and Foreign Trade Law and the U.S. Export Administration Regulations. Export and re-export of Product or related software or technology are strictly prohibited except in compliance with all applicable export laws and regulations.
- Please contact your TOSHIBA sales representative for details as to environmental matters such as the RoHS compatibility of Product. Please use Product in compliance with all applicable laws and regulations that regulate the inclusion or use of controlled substances, including without limitation, the EU RoHS Directive. **TOSHIBA ASSUMES NO LIABILITY FOR DAMAGES OR LOSSES OCCURRING AS A RESULT OF NONCOMPLIANCE WITH APPLICABLE LAWS AND REGULATIONS.**