TOSHIBA Photocoupler IRED + Photo IC

TLP750

Digital Logic Ground Isolation
Line Receiver
Microprocessor System Interfaces
Switching Power Supply Feedback Control
Analog Signal Isolation
Transistor Inverter

The TOSHIBA TLP750 consists of a high-output infrared light emitting diode optically coupled to a high-speed photodiode with a transistor amplifier and is housed in an 8-pin DIP.
The TLP750 has no internal base connection and features noise immunity, thus it is suitable for inverter drivers for variable-speed motor drives.

- Switching speed: t_{pHL}=0.3μs (typ.)
- Switching speed: t_{pLH}=0.5μs (typ.) (R_L=1.9kΩ)
- Isolation voltage: 5000 V_{rms} (min)
- UL-recognized: UL 1577, File No.E67349
- cUL-recognized: CSA Component Acceptance Service No.5A
  File No.E67349
- VDE-approved: EN 60747-5-5 (Note 1)

Note 1 : When a VDE approved type is needed, please designate the **Option(D4)**.

- Creepage distance: 6.4mm (min)
  Clearance: 6.4mm (min)
  Insulation thickness: 0.4mm (min)

Unit: mm

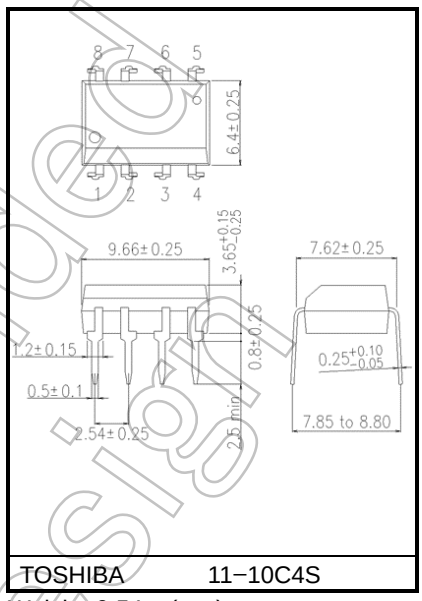

TOSHIBA 11−10C4S

Weight: 0.54 g (typ.)

Pin Configuration (top view)

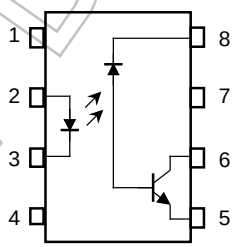

1 : N.C.
2 : Anode
3 : Cathode
4 : N.C.
5 : Emitter
6 : Collector
7 : N.C.
8 : V_{CC}

Schematic

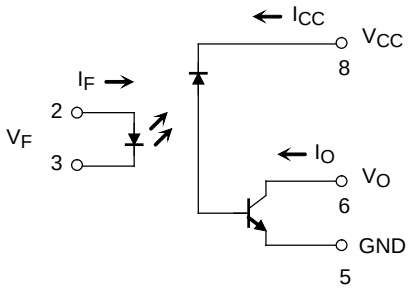

Start of commercial production
1989-10

Not Recommended for New Design

Absolute Maximum Ratings (Ta = 25°C)

Characteristic			Symbol	Rating	Unit
LED	Forward current	(Note 1)	I_F	25	mA
	Pulse forward current	(Note 2)	I_{FP}	50	mA
	Peak transient forward current	(Note 3)	I_{FPT}	1	A
	Reverse voltage		V_R	5	V
	Diode power dissipation	(Note 4)	P_D	45	mW
Detector	Output current		I_O	8	mA
	Peak output current		I_{OP}	16	mA
	Output voltage		V_O	−0.5 to 15	V
	Supply voltage		V_{CC}	−0.5 to 15	V
	Output power dissipation	(Note 5)	P_O	100	mW
Operating temperature range			T_{opr}	−55 to 100	°C
Storage temperature range			T_{stg}	−55 to 125	°C
Lead solder temperature(10 s)		(Note 6)	T_{sol}	260	°C
Isolation voltage (AC, 60 s, R.H.= 60 %)		(Note 7)	BV_S	5000	V_{rms}

Note: Using continuously under heavy loads (e.g. the application of high temperature/current/voltage and the significant change in temperature, etc.) may cause this product to decrease in the reliability significantly even if the operating conditions (i.e. operating temperature/current/voltage, etc.) are within the absolute maximum ratings.
Please design the appropriate reliability upon reviewing the Toshiba Semiconductor Reliability Handbook (“Handling Precautions”/“Derating Concept and Methods”) and individual reliability data (i.e. reliability test report and estimated failure rate, etc).

(Note 1) Derate 0.8 mA / °C above 70 °C.

(Note 2) 50 % duty cycle, 1ms pulse width.
Derate 1.6 mA / °C above 70 °C.

(Note 3) Pulse width ≤ 1 μs, 300 pps.

(Note 4) Derate 0.9 mW / °C above 70 °C.

(Note 5) Derate 2 mW / °C above 70 °C.

(Note 6) Soldering portion of lead: Up to 2mm from the body of the device.

(Note 7) Device considered a two terminal device: Pins 1, 2, 3 and 4 shorted together and pins 5, 6, 7 and 8 shorted together.

Not Recommended for New Design

© 2019
Toshiba Electronic Devices & Storage Corporation

Electrical Characteristics (Ta = 25°C)

Characteristic		Symbol	Test Condition		Min	Typ.	Max	Unit
LED	Forward voltage	V_F	I_F = 16 mA		—	1.65	1.85	V
	Forward voltage temperature coefficient	$\Delta V_F / \Delta Ta$	I_F = 16 mA		—	−2	—	mV / °C
	Reverse current	I_R	V_R = 5 V		—	—	10	μA
	Capacitance between terminal	C_T	V_F = 0 V, f = 1 MHz		—	45	—	pF
Detector	High level output current	$I_{OH(1)}$	I_F = 0 mA, V_{CC} = V_O = 5.5 V		—	3	500	nA
		$I_{OH(2)}$	I_F = 0 mA, V_{CC} = V_O = 15 V		—	—	5	μA
		I_{OH}	I_F = 0 mA, V_{CC} = V_O = 15 V, Ta = 70 °C		—	—	50	μA
	High level supply voltage	I_{CCH}	I_F = 0 mA, V_{CC} = 15 V		—	0.01	1	μA
Coupled/ Insulation	Current transfer ratio	I_O/I_F	I_F = 16 mA, V_{CC} = 4.5 V, V_O = 0.4 V	Ta = 25° C	10	30	—	%
				Rank: O	19	30	—	
				Ta = 0 to 70 °C	5	—	—	
				Rank: O	15	—	—	
	Low level output voltage	V_{OL}	I_F = 16 mA, V_{CC} = 4.5 V, I_O = 1.1 mA (rank O: I_O = 2.4 mA)		—	—	0.4	V
	Isolation resistance	R_S	R.H.≤ 60 %, V_S = 500 V_{DC} (Note 7)		1×10^{12}	10^{14}	—	Ω
	Capacitance between input to output	C_S	V_S = 0 V, f = 1 MHz (Note 7)		—	0.8	—	pF
	Isolation Voltage	BV_S	AC, 60 s (Note 7)		5000	—	—	Vrms

Switching Characteristics (Ta = 25°C, V_{CC} = 5V)

Characteristic	Symbol	Test Circuit	Test Condition		Min	Typ.	Max	Unit
Propagation delay time (H→L)	t_{pHL}	1	I_F = 16 mA, R_L = 4.1 kΩ		—	0.2	0.8	μs
				Rank O: R_L=1.9 kΩ	—	0.3	0.8	
Propagation delay time (L→H)	t_{pLH}		I_F = 16 mA, R_L = 4.1 kΩ		—	1	2	μs
				Rank O: R_L = 1.9 kΩ	—	0.5	1.2	
Common mode transient immunity at logic high output (Note 8)	CM_H	2	I_F = 0 mA, V_{CM} = 200 V_{p-p}, R_L=4.1 kΩ (Rank O: R_L = 1.9 kΩ)		—	1500	—	V / μs
Common mode transient immunity at logic low output (Note 8)	CM_L		I_F = 16 mA, V_{CM} = 200 V_{p-p}, R_L = 4.1 kΩ (Rank O: R_L = 1.9 kΩ)		—	−1500	—	V / μs

(Note 8) CM_L is the maximum rate of fall of the common mode voltage that can be sustained with the output voltage in the logic low state (V_O < 0.8 V).
CM_H is the maximum rate of rise of the common mode voltage that can be sustained with the output voltage in the logic high state (V_O > 2.0 V).

Not Recommended for New Design

Test Circuit 1: Switching Time Test Circuit

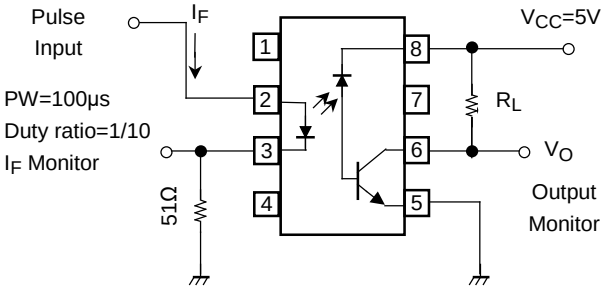

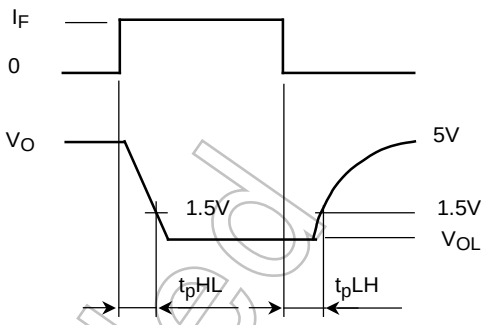

Test Circuit 2: Common Mode Noise Immunity Test Circuit

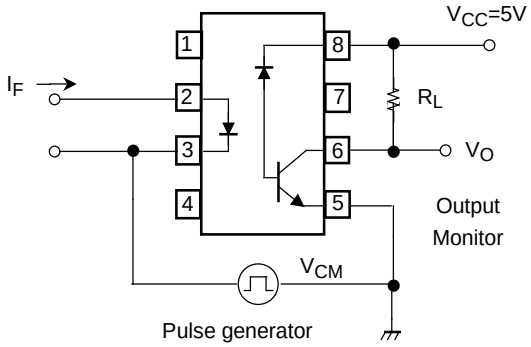

Z_O=50Ω

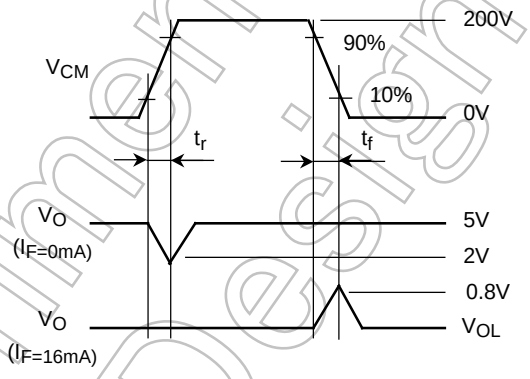

$$CM_H = \frac{160(V)}{t_r(\mu s)}, CM_L = \frac{160(V)}{t_f(\mu s)}$$

Not Recommended for New Design

$I_F - V_F$

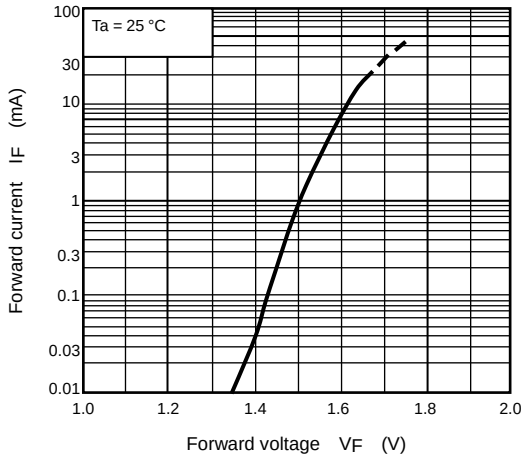

$\Delta V_F/\Delta Ta - I_F$

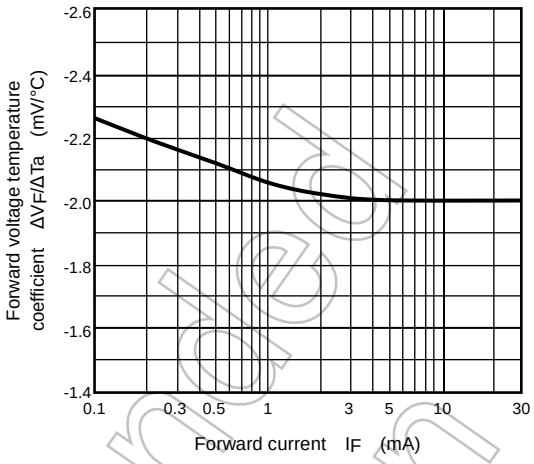

$I_{OH(1)} - Ta$

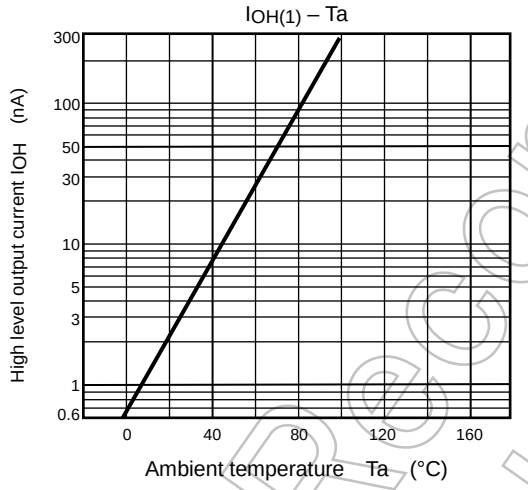

$I_O - I_F$

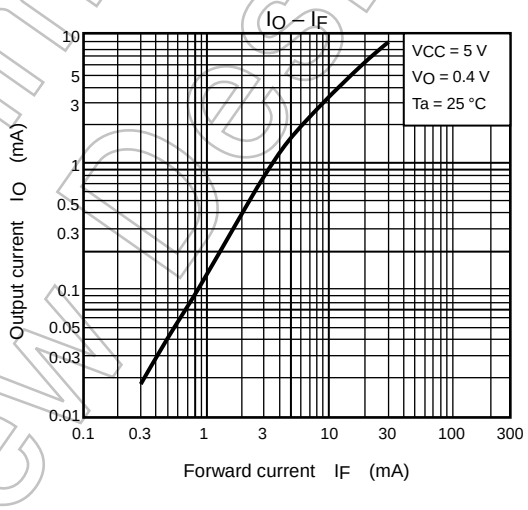

$I_O/I_F - I_F$

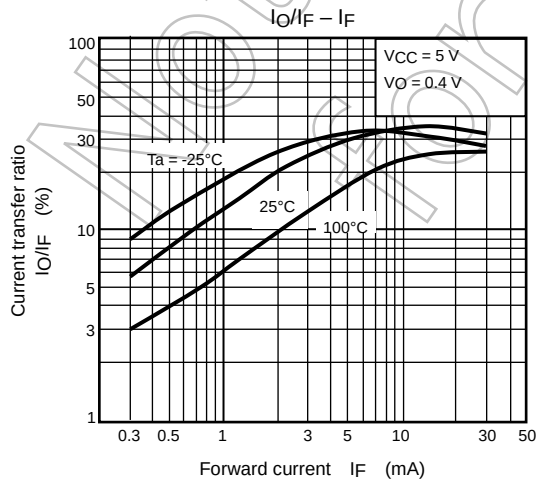

$I_O/I_F - Ta$

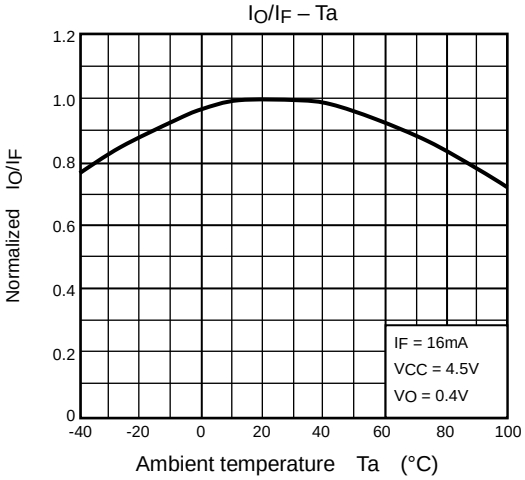

Not Recommended for New Design

NOTE: The above characteristics curves are presented for reference only and not guaranteed by production test, unless otherwise noted.

© 2019
Toshiba Electronic Devices & Storage Corporation

$I_O - V_O$

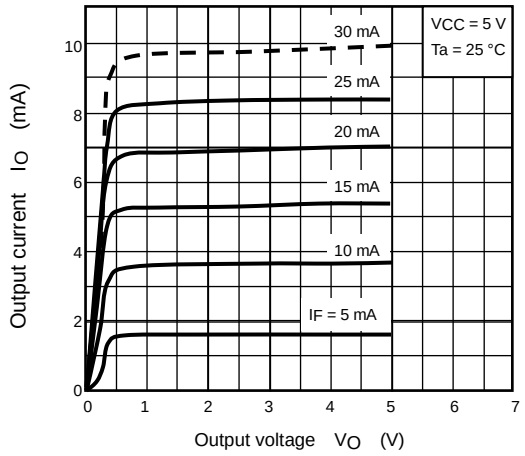

$V_O - I_F$

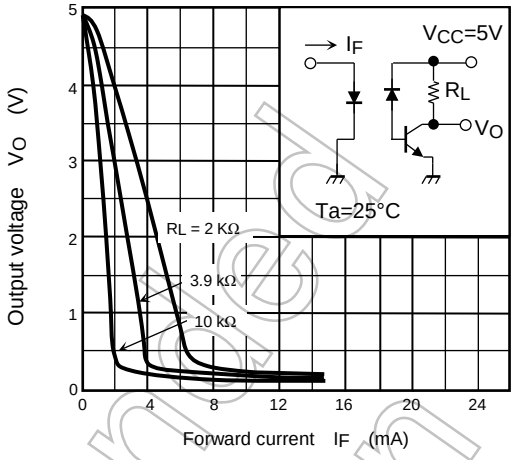

$t_{pHL}, t_{pLH} - R_L$

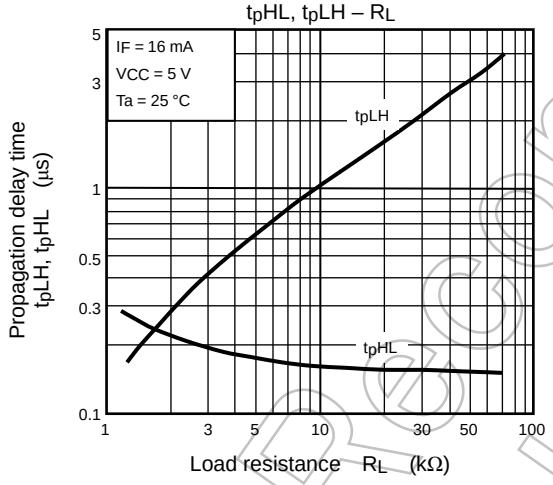

Not Recommended for New Design

NOTE: The above characteristics curves are presented for reference only and not guaranteed by production test, unless otherwise noted.

RESTRICTIONS ON PRODUCT USE

Toshiba Corporation and its subsidiaries and affiliates are collectively referred to as “TOSHIBA”.
Hardware, software and systems described in this document are collectively referred to as “Product”.

- TOSHIBA reserves the right to make changes to the information in this document and related Product without notice.
- This document and any information herein may not be reproduced without prior written permission from TOSHIBA. Even with TOSHIBA's written permission, reproduction is permissible only if reproduction is without alteration/omission.
- Though TOSHIBA works continually to improve Product's quality and reliability, Product can malfunction or fail. Customers are responsible for complying with safety standards and for providing adequate designs and safeguards for their hardware, software and systems which minimize risk and avoid situations in which a malfunction or failure of Product could cause loss of human life, bodily injury or damage to property, including data loss or corruption. Before customers use the Product, create designs including the Product, or incorporate the Product into their own applications, customers must also refer to and comply with (a) the latest versions of all relevant TOSHIBA information, including without limitation, this document, the specifications, the data sheets and application notes for Product and the precautions and conditions set forth in the "TOSHIBA Semiconductor Reliability Handbook" and (b) the instructions for the application with which the Product will be used with or for. Customers are solely responsible for all aspects of their own product design or applications, including but not limited to (a) determining the appropriateness of the use of this Product in such design or applications; (b) evaluating and determining the applicability of any information contained in this document, or in charts, diagrams, programs, algorithms, sample application circuits, or any other referenced documents; and (c) validating all operating parameters for such designs and applications. **TOSHIBA ASSUMES NO LIABILITY FOR CUSTOMERS' PRODUCT DESIGN OR APPLICATIONS.**
- **PRODUCT IS NEITHER INTENDED NOR WARRANTED FOR USE IN EQUIPMENTS OR SYSTEMS THAT REQUIRE EXTRAORDINARILY HIGH LEVELS OF QUALITY AND/OR RELIABILITY, AND/OR A MALFUNCTION OR FAILURE OF WHICH MAY CAUSE LOSS OF HUMAN LIFE, BODILY INJURY, SERIOUS PROPERTY DAMAGE AND/OR SERIOUS PUBLIC IMPACT ("UNINTENDED USE").** Except for specific applications as expressly stated in this document, Unintended Use includes, without limitation, equipment used in nuclear facilities, equipment used in the aerospace industry, lifesaving and/or life supporting medical equipment, equipment used for automobiles, trains, ships and other transportation, traffic signaling equipment, equipment used to control combustions or explosions, safety devices, elevators and escalators, and devices related to power plant. **IF YOU USE PRODUCT FOR UNINTENDED USE, TOSHIBA ASSUMES NO LIABILITY FOR PRODUCT.** For details, please contact your TOSHIBA sales representative or contact us via our website.
- Do not disassemble, analyze, reverse-engineer, alter, modify, translate or copy Product, whether in whole or in part.
- Product shall not be used for or incorporated into any products or systems whose manufacture, use, or sale is prohibited under any applicable laws or regulations.
- The information contained herein is presented only as guidance for Product use. No responsibility is assumed by TOSHIBA for any infringement of patents or any other intellectual property rights of third parties that may result from the use of Product. No license to any intellectual property right is granted by this document, whether express or implied, by estoppel or otherwise.
- **ABSENT A WRITTEN SIGNED AGREEMENT, EXCEPT AS PROVIDED IN THE RELEVANT TERMS AND CONDITIONS OF SALE FOR PRODUCT, AND TO THE MAXIMUM EXTENT ALLOWABLE BY LAW, TOSHIBA (1) ASSUMES NO LIABILITY WHATSOEVER, INCLUDING WITHOUT LIMITATION, INDIRECT, CONSEQUENTIAL, SPECIAL, OR INCIDENTAL DAMAGES OR LOSS, INCLUDING WITHOUT LIMITATION, LOSS OF PROFITS, LOSS OF OPPORTUNITIES, BUSINESS INTERRUPTION AND LOSS OF DATA, AND (2) DISCLAIMS ANY AND ALL EXPRESS OR IMPLIED WARRANTIES AND CONDITIONS RELATED TO SALE, USE OF PRODUCT, OR INFORMATION, INCLUDING WARRANTIES OR CONDITIONS OF MERCHANTABILITY, FITNESS FOR A PARTICULAR PURPOSE, ACCURACY OF INFORMATION, OR NONINFRINGEMENT.**
- GaAs (Gallium Arsenide) is used in Product. GaAs is harmful to humans if consumed or absorbed, whether in the form of dust or vapor. Handle with care and do not break, cut, crush, grind, dissolve chemically or otherwise expose GaAs in Product.
- Do not use or otherwise make available Product or related software or technology for any military purposes, including without limitation, for the design, development, use, stockpiling or manufacturing of nuclear, chemical, or biological weapons or missile technology products (mass destruction weapons). Product and related software and technology may be controlled under the applicable export laws and regulations including, without limitation, the Japanese Foreign Exchange and Foreign Trade Law and the U.S. Export Administration Regulations. Export and re-export of Product or related software or technology are strictly prohibited except in compliance with all applicable export laws and regulations.
- Please contact your TOSHIBA sales representative for details as to environmental matters such as the RoHS compatibility of Product. Please use Product in compliance with all applicable laws and regulations that regulate the inclusion or use of controlled substances, including without limitation, the EU RoHS Directive. **TOSHIBA ASSUMES NO LIABILITY FOR DAMAGES OR LOSSES OCCURRING AS A RESULT OF NONCOMPLIANCE WITH APPLICABLE LAWS AND REGULATIONS.**

Not Recommended for New Design

© 2019
Toshiba Electronic Devices & Storage Corporation