TRACO POWER

DC/DC Converter

TDN 3WISM Series, 3 Watt

- **Ultra compact SMD package 13.2 x 9.1 x 10.2 mm**
- **I/O-isolation 1‘600 VDC**
- **Fully regulated outputs**
- **Operating temperature range -40°C to +70°C without derating**
- **Short circuit protection**
- **Remote On/Off**
- **Designed to meet IEC/EN/UL 62368-1 (not certified)**
- **3-year product warranty**

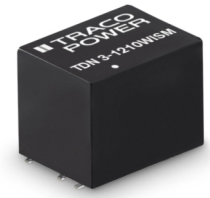

The TDN 3WISM Series comprises 3 Watt fully regulated, high performance DC/DC converters. They come in a compact cubical package of only 1.23 cm3. Full load operation is reliable up tp 70°C environment temperature. With 1'600 VDC I/O-isolation voltage, external On/Off, and short current protection they cover a wide range of application when space is limited. The input of the converters is designed for a wide voltage range (4:1) and minimum load is not required.
The functional I/O-isolation system is designed to meet IEC/EN/UL 62368-1 (not certified) with a test voltage (60 s) of 1'600 VDC.

Models

Order Code	Input Voltage Range	Output 1		Output 2		Efficiency
		Vnom	Imax	Vnom	Imax	typ.
TDN 3-1210WISM	4.5 - 18 VDC (12 VDC nom.)	3.3 VDC	700 mA			76 %
TDN 3-1211WISM		5 VDC	600 mA			80 %
TDN 3-1219WISM		9 VDC	333 mA			81 %
TDN 3-1212WISM		12 VDC	250 mA			83 %
TDN 3-1213WISM		15 VDC	200 mA			84 %
TDN 3-1215WISM		24 VDC	125 mA			82 %
TDN 3-1221WISM		+5 VDC	300 mA	−5 VDC	300 mA	80 %
TDN 3-1222WISM		+12 VDC	125 mA	−12 VDC	125 mA	82 %
TDN 3-1223WISM		+15 VDC	100 mA	−15 VDC	100 mA	82 %
TDN 3-2410WISM	9 - 36 VDC (24 VDC nom.)	3.3 VDC	700 mA			77 %
TDN 3-2411WISM		5 VDC	600 mA			80 %
TDN 3-2419WISM		9 VDC	333 mA			81 %
TDN 3-2412WISM		12 VDC	250 mA			83 %
TDN 3-2413WISM		15 VDC	200 mA			83 %
TDN 3-2415WISM		24 VDC	125 mA			82 %
TDN 3-2421WISM		+5 VDC	300 mA	−5 VDC	300 mA	80 %
TDN 3-2422WISM		+12 VDC	125 mA	−12 VDC	125 mA	82 %
TDN 3-2423WISM		+15 VDC	100 mA	−15 VDC	100 mA	82 %
TDN 3-4810WISM	18 - 75 VDC (48 VDC nom.)	3.3 VDC	700 mA			77 %
TDN 3-4811WISM		5 VDC	600 mA			80 %
TDN 3-4819WISM		9 VDC	333 mA			81 %
TDN 3-4812WISM		12 VDC	250 mA			83 %
TDN 3-4813WISM		15 VDC	200 mA			83 %
TDN 3-4815WISM		24 VDC	125 mA			82 %
TDN 3-4821WISM		+5 VDC	300 mA	−5 VDC	300 mA	80 %
TDN 3-4822WISM		+12 VDC	125 mA	−12 VDC	125 mA	82 %
TDN 3-4823WISM		+15 VDC	100 mA	−15 VDC	100 mA	82 %

Input Specifications

Input Current	- At no load	12 Vin models:	**40 mA typ.**
		24 Vin models:	**24 mA typ.**
		48 Vin models:	**13 mA typ.**
Surge Voltage		12 Vin models:	**25 VDC max.** (1 s max.)
		24 Vin models:	**50 VDC max.** (1 s max.)
		48 Vin models:	**100 VDC max.** (1 s max.)
Reflected Ripple Current			**20 mAp-p typ.**
Recommended Input Fuse		12 Vin models:	**1'600 mA** (slow blow)
		24 Vin models:	**800 mA** (slow blow)
		48 Vin models:	**500 mA** (slow blow)
			(The need of an external fuse has to be assessed in the final application.)
Input Filter			Internal Capacitor

Output Specifications

Voltage Set Accuracy			±1% max.
Regulation	- Input Variation (Vmin - Vmax)	single output models:	**0.2% max.**
		dual output models:	**0.2% max.**
	- Load Variation (0 - 100%)	single output models:	**1% max.**
		dual output models:	**1% max.** (Output 1)
			1% max. (Output 2)
	- Cross Regulation (25% / 100% asym. load)	dual output models:	**5% max.**
Ripple and Noise	- 20 MHz Bandwidth		**50 mVp-p typ.**
Capacitive Load	- single output	3.3 Vout models:	**4'700 µF max.**
		5 Vout models:	**2'530 µF max.**
		9 Vout models:	**1'470 µF max.**
		12 Vout models:	**1'220 µF max.**
		15 Vout models:	**1'000 µF max.**
		24 Vout models:	**470 µF max.**
	- dual output	5 / -5 Vout models:	**1'470 / 1'470 µF max.**
		12 / -12 Vout models:	**680 / 680 µF max.**
		15 / -15 Vout models:	**470 / 470 µF max.**
Minimum Load			Not required
Temperature Coefficient			±0.02 %/K max.
Start-up Time			10 ms typ. / 20 ms max.
Short Circuit Protection			Continuous, Automatic recovery
Transient Response	- Response Time		**500 µs typ.** (25% Load Step)

Safety Specifications

Standards	- IT / Multimedia Equipment	**Designed for IEC/EN/UL 62368-1** (not certified)

EMC Specifications

EMI (Emissions)	- Conducted Emissions		**EN 55032 class A** (with external filter)
			EN 55032 class B (with external filter)
	- Radiated Emissions		**EN 55032 class A** (with external filter)
			EN 55032 class B (with external filter)
		External filter proposal:	www.tracopower.com/overview/tdn3wism

All specifications valid at nominal voltage, resistive full load and +25°C after warm-up time, unless otherwise stated.

EMS (Immunity)	- Electrostatic Discharge	Air:	EN 61000-4-2, ±8 kV, perf. criteria A
		Contact:	EN 61000-4-2, ±6 kV, perf. criteria A
	- RF Electromagnetic Field		EN 61000-4-3, 10 V/m, perf. criteria A
	- EFT (Burst) / Surge		EN 61000-4-4, ±2 kV, perf. criteria A
			EN 61000-4-5, ±1 kV, perf. criteria A
		Ext. input component:	KY 220 µF, 100 V
	- Conducted RF Disturbances		EN 61000-4-6, 10 Vrms, perf. criteria A
	- PF Magnetic Field	Continuous:	EN 61000-4-8, 100 A/m, perf. criteria A
		1 s:	EN 61000-4-8, 1000 A/m, perf. criteria A

General Specifications

Relative Humidity			95% max. (non condensing)
Temperature Ranges	- Operating Temperature		–40°C to +70°C (without derating)
	- Case Temperature		+105°C max.
	- Storage Temperature		–55°C to +125°C
Power Derating	- High Temperature		2.86 %/K above 70°C
		See application note:	www.tracopower.com/overview/tdn3wism
Cooling System			Natural convection (20 LFM)
Remote Control	- Current Controlled Remote (passive = on)		On: open circuit Off: 2 to 4 mA current (no internal resistor) Refers to 'Remote' and '-Vin' Pin
		External circuit proposal:	www.tracopower.com/info/current-remote.pdf
	- Off Idle Input Current		2.5 mA max.
Regulator Topology			RCC Converter
Switching Frequency			100 kHz min. (PFM)
Insulation System			Functional Insulation
Isolation Test Voltage	- Input to Output, 60 s		1'600 VDC
Isolation Resistance	- Input to Output, 500 VDC		1'000 MΩ min.
Isolation Capacitance	- Input to Output, 100 kHz, 1 V		50 pF max.
Reliability	- Calculated MTBF		5'630'000 h (MIL-HDBK-217F, ground benign)
Moisture Sensitivity (MSL)			Level 2 (J-STD-033C)
Washing Process			According to Cleaning Guideline www.tracopower.com/info/cleaning.pdf
Environment	- Vibration		MIL-STD-810F
	- Thermal Shock		MIL-STD-810F
Housing Material			Non-conductive Plastic (UL 94 V-0 rated)
Base Material			Non-conductive Plastic (UL 94 V-0 rated)
Potting Material			Silicone (UL 94 V-0 rated)
Pin Material			Copper
Pin Foundation Plating			Nickel (2 - 3 µm)
Pin Surface Plating			Tin (3 - 5 µm), matte
Housing Type			Plastic Case
Mounting Type			PCB Mount
Connection Type			SMD (Surface-Mount Device)
Footprint Type			SMD8
Soldering Profile			Lead-Free Reflow Soldering (acc. J-STD-020E) 245°C max. (Tp) 10 s max. (tp, at Tp - 5°C) 90 s max. (tL, time above 217°C)
		See application note:	www.tracopower.com/info/reflow-soldering.pdf
Weight			2.7 g

All specifications valid at nominal voltage, resistive full load and +25°C after warm-up time, unless otherwise stated.

Environmental Compliance	- REACH Declaration	www.tracopower.com/info/reach-declaration.pdf REACH SVHC list compliant REACH Annex XVII compliant
	- RoHS Declaration	www.tracopower.com/info/rohs-declaration.pdf Exemptions: 7a, 7c-I (RoHS exemptions refer to the component concentration only, not to the overall concentration in the product (O5A rule).)
	- SCIP Reference Number	9034a8be-5a79-4822-a51f-006fd565932f

Supporting Documents

Overview Link (for additional Documents)	www.tracopower.com/overview/tdn3wism

Outline Dimensions

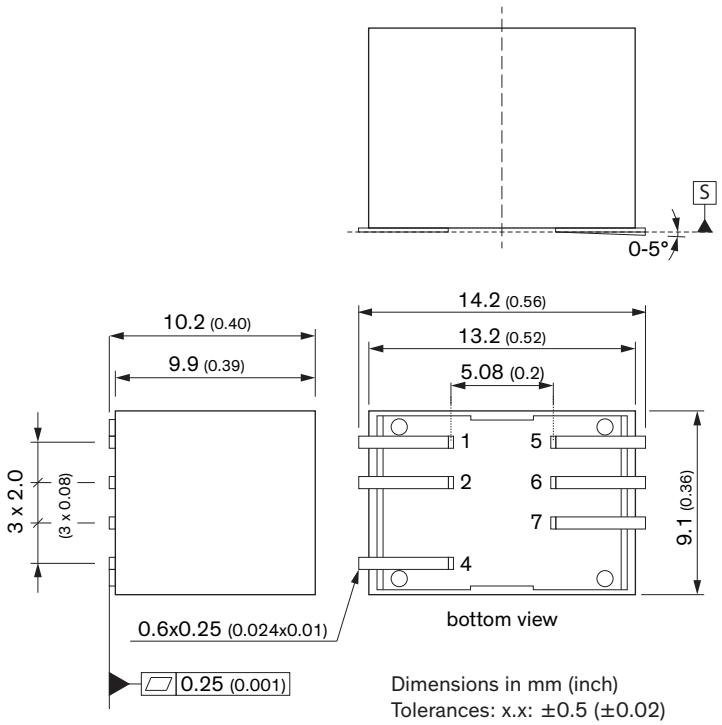

Dimensions in mm (inch)
Tolerances: x.x: ±0.5 (±0.02)
Pin pitch tolerances: ±0.25 (±0.01)
Pin diameter: ±0.1 (±0.004)

Pinout

Pin	Single	Dual
1	+Vin (Vcc)	+Vin (Vcc)
2	–Vin (GND)	–Vin (GND)
4	Remote On/Off	Remote On/Off
5	NC	–Vout
6	–Vout	Common
7	+Vout	+Vout

NC: Not connected

All specifications valid at nominal voltage, resistive full load and +25°C after warm-up time, unless otherwise stated.

Recommended Solder Pad Layout

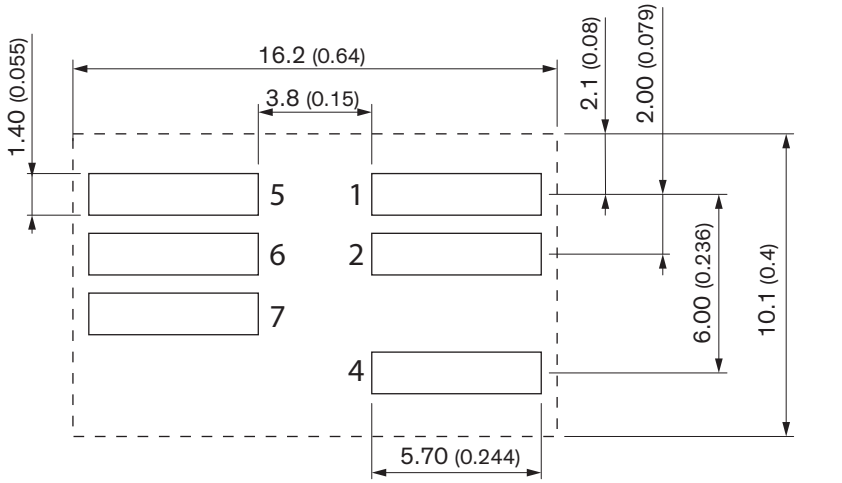

Dimensions in mm (inch)

© Copyright 2025 Traco Electronic AG Specifications can be changed without notice.