TRACO POWER

DC/DC Converter

TDN 5WI Series, 5 Watt

- **Ultra compact DIP package 13.2 x 9.1 x 10.2 mm**
- **I/O-isolation 1'600 VDC**
- **Fully regulated outputs**
- **Operating temperature range -40°C to +75°C**
- **Short circuit protection**
- **Remote On/Off**
- **3-year product warranty**
- **Designed to meet UL 62368-1 (UL 60950-1)**

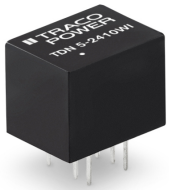

The TDN 5WI Series redefines the power density of high performance DC/DC converters. The cubical package of only 1.23 cm³ encloses a sophisticated circuit which provides 5 Watt output power without any compromise regarding reliability and functionality. They operate up to 50°C environment temperature at full load or up to 70°C with a 50% load de-rating. With 1'600 VDC I/O-isolation voltage, external On/Off and short current protection, they cover a wide range of application when space is limited. The input of the converters is designed for a wide voltage range (4:1) and minimum load is not required.
The functional I/O-isolation system is designed to meet IEC/EN 62368-1 with a test voltage (60 s) of 1'600 VDC.

Models

Order Code	Input Voltage Range	Output 1		Output 2		Efficiency
		Vnom	Imax	Vnom	Imax	typ.
TDN 5-0910WI	4.5 - 13.2 VDC (9 VDC nom.)	3.3 VDC	1'000 mA			76 %
TDN 5-0911WI		5 VDC	1'000 mA			80 %
TDN 5-0919WI		9 VDC	555 mA			81 %
TDN 5-0912WI		12 VDC	420 mA			83 %
TDN 5-0913WI		15 VDC	333 mA			83 %
TDN 5-0915WI		24 VDC	210 mA			83 %
TDN 5-0921WI		+5 VDC	500 mA	−5 VDC	500 mA	80 %
TDN 5-0922WI		+12 VDC	210 mA	−12 VDC	210 mA	83 %
TDN 5-0923WI		+15 VDC	168 mA	−15 VDC	168 mA	83 %
TDN 5-2410WI	9 - 36 VDC (24 VDC nom.)	3.3 VDC	1'000 mA			76 %
TDN 5-2411WI		5 VDC	1'000 mA			80 %
TDN 5-2419WI		9 VDC	555 mA			81 %
TDN 5-2412WI		12 VDC	420 mA			83 %
TDN 5-2413WI		15 VDC	333 mA			83 %
TDN 5-2415WI		24 VDC	210 mA			83 %
TDN 5-2421WI		+5 VDC	500 mA	−5 VDC	500 mA	80 %
TDN 5-2422WI		+12 VDC	210 mA	−12 VDC	210 mA	83 %
TDN 5-2423WI		+15 VDC	168 mA	−15 VDC	168 mA	84 %
TDN 5-4810WI	18 - 75 VDC (48 VDC nom.)	3.3 VDC	1'000 mA			76 %
TDN 5-4811WI		5 VDC	1'000 mA			81 %
TDN 5-4819WI		9 VDC	555 mA			81 %
TDN 5-4812WI		12 VDC	420 mA			83 %
TDN 5-4813WI		15 VDC	333 mA			83 %
TDN 5-4815WI		24 VDC	210 mA			83 %
TDN 5-4821WI		+5 VDC	500 mA	−5 VDC	500 mA	80 %
TDN 5-4822WI		+12 VDC	210 mA	−12 VDC	210 mA	83 %
TDN 5-4823WI		+15 VDC	168 mA	−15 VDC	168 mA	84 %

Input Specifications

Input Current	- At no load	9 Vin models:	80 mA typ.
		24 Vin models:	30 mA typ.
		48 Vin models:	15 mA typ.
Surge Voltage		9 Vin models:	15 VDC max. (1 s max.)
		24 Vin models:	50 VDC max. (1 s max.)
		48 Vin models:	100 VDC max. (1 s max.)
Reflected Ripple Current		9 Vin models:	40 mAp-p typ.
		24 Vin models:	20 mAp-p typ.
		48 Vin models:	15 mAp-p typ.
Recommended Input Fuse		9 Vin models:	2'500 mA (slow blow)
		24 Vin models:	1'250 mA (slow blow)
		48 Vin models:	630 mA (slow blow)
			(The need of an external fuse has to be assessed in the final application.)
Input Filter			Internal Capacitor

Output Specifications

Voltage Set Accuracy			±1% max.
Regulation	- Input Variation (Vmin - Vmax)	single output models:	0.2% max.
		dual output models:	0.2% max.
	- Load Variation (0 - 100%)	single output models:	1% max.
		dual output models:	1% max. (Output 1)
			1% max. (Output 2)
	- Cross Regulation (25% / 100% asym. load)	dual output models:	5% max.
Ripple and Noise	- 20 MHz Bandwidth		75 mVp-p typ.
Capacitive Load	- single output	3.3 Vout models:	4'400 µF max.
		5 Vout models:	2'200 µF max.
		9 Vout models:	1'470 µF max.
		12 Vout models:	1'220 µF max.
		15 Vout models:	1'000 µF max.
		24 Vout models:	470 µF max.
	- dual output	5 / -5 Vout models:	1'000 / 1'000 µF max.
		12 / -12 Vout models:	680 / 680 µF max.
		15 / -15 Vout models:	440 / 440 µF max.
Minimum Load			Not required
Temperature Coefficient			±0.02 %/K max.
Start-up Time			10 ms typ. / 20 ms max.
Short Circuit Protection			Continuous, Automatic recovery
Transient Response	- Response Time		500 µs typ. (25% Load Step)

Safety Specifications

Safety Standards	- IT / Multimedia Equipment	Designed for EN 62368-1 (no certification)

EMC Specifications

EMI Emissions	- Conducted Emissions		EN 55032 class A (with external filter)
			EN 55032 class B (with external filter)
	- Radiated Emissions		EN 55032 class A (with external filter)
			EN 55032 class B (with external filter)
		External filter proposal:	www.tracopower.com/overview/tdn5wi

All specifications valid at nominal voltage, resistive full load and +25°C after warm-up time, unless otherwise stated.

EMS Immunity	- Electrostatic Discharge	Air:	EN 61000-4-2, ±8 kV, perf. criteria A
		Contact:	EN 61000-4-2, ±6 kV, perf. criteria A
	- RF Electromagnetic Field		EN 61000-4-3, 10 V/m, perf. criteria A
	- EFT (Burst) / Surge		EN 61000-4-4, ±2 kV, perf. criteria A
			EN 61000-4-5, ±1 kV, perf. criteria A
		Ext. input component:	KY 220 µF, 100 V
	- Conducted RF Disturbances		EN 61000-4-6, 10 Vrms, perf. criteria A
	- PF Magnetic Field	Continuous:	EN 61000-4-8, 100 A/m, perf. criteria A
		1 s:	EN 61000-4-8, 1000 A/m, perf. criteria A

General Specifications

Relative Humidity			95% max. (non condensing)
Temperature Ranges	- Operating Temperature		–40°C to +75°C
	- Case Temperature		+105°C max.
	- Storage Temperature		–55°C to +125°C
Power Derating	- High Temperature	See application note:	www.tracopower.com/overview/tdn5wi
Cooling System			Natural convection (20 LFM)
Remote Control	- Current Controlled Remote		On: open circuit Off: 2 to 4 mA current (no internal resistor)
		External circuit proposal:	www.tracopower.com/info/current-remote.pdf
	- Off Idle Input Current		2.5 mA max.
Switching Frequency			100 kHz min. (PFM)
Insulation System			Functional Insulation
Isolation Test Voltage	- Input to Output, 60 s		1'600 VDC
Isolation Resistance	- Input to Output, 500 VDC		1'000 MΩ min.
Isolation Capacitance	- Input to Output, 100 kHz, 1 V		50 pF max.
Reliability	- Calculated MTBF		2'960'000 h (Vin models) 2'280'000 h (other models) (MIL-HDBK-217F, ground benign)
Environment	- Vibration		MIL-STD-810F
	- Thermal Shock		MIL-STD-810F
Housing Material			Non-conductive Plastic (UL 94 V-0 rated)
Base Material			Non-conductive Plastic (UL 94 V-0 rated)
Potting Material			Silicone (UL 94 V-0 rated)
Pin Material			Copper
Pin Foundation Plating			Nickel (2 - 3 µm)
Pin Surface Plating			Tin (3 - 5 µm), matte
Housing Type			Plastic Case
Mounting Type			PCB Mount
Connection Type			THD (Through-Hole Device)
Footprint Type			DIP8
Soldering Profile			260°C / 6 s max.
Weight			2.7 g
Environmental Compliance	- REACH Declaration		www.tracopower.com/info/reach-declaration.pdf REACH SVHC list compliant REACH Annex XVII compliant
	- RoHS Declaration		www.tracopower.com/info/rohs-declaration.pdf Exemptions: 7a, 7c-I (RoHS exemptions refer to the component concentration only, not to the overall concentration in the product (O5A rule). The SCIP number is provided on request.)

Supporting Documents

Overview Link (for additional Documents)	www.tracopower.com/overview/tdn5wi

All specifications valid at nominal voltage, resistive full load and +25°C after warm-up time, unless otherwise stated.

Outline Dimensions

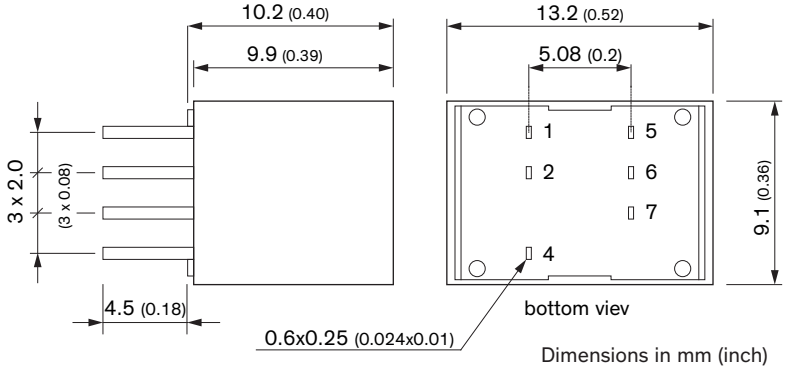

Dimensions in mm (inch)
Tolerances: x.x: ±0.5 (±0.02)
Pin pitch tolerances: ±0.25 (±0.01)
Pin diameter: ±0.1 (±0.004)

Pinout		
Pin	**Single**	**Dual**
1	+Vin (Vcc)	+Vin (Vcc)
2	–Vin (GND)	–Vin (GND)
4	Remote On/Off	Remote On/Off
5	NC	–Vout
6	–Vout	Common
7	+Vout	+Vout

NC: Not Connected

© Copyright 2021 Traco Electronic AG