TRACO POWER

DC/DC Converter

TDR 3 Series, 3 Watt

- **Compact design in THD Package**
- **Wide 2:1 input voltage range**
- **Fully regulated outputs**
- **Low ripple and noise**
- **Temperature range –40°C to +85°C without derating**
- **I/O isolation 1600 VDC**
- **Continuous short-circuit protection**
- **Remote On/Off control**
- **Fully RoHS compliant**
- **3-year product warranty**

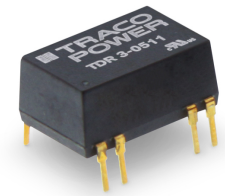

UL 62368-1 IEC 62368-1
UL 60950-1 IEC 60950-1

The TDR 3 series is a family of compact 3 W DC/DC-converters with 2:1 input voltage ranges and tightly regulated output voltages even under no load conditions. The product is available in THD-package. They work with high efficiency over the full load range and come with a remote On/Off input. The usability in temperature ranges of up to 85°C, continuous short circuit protection and excellent immunity against environmental influences make these converters very reliable. A TDR 3 converter is the ideal solution for space critical high end applications in communication equipment, instrumentation and industrial electronics.

Models

Order Code	Input Voltage Range	Output 1		Output 2		Efficiency
		Vnom	Imax	Vnom	Imax	typ.
TDR 3-0511	4.5 - 9 VDC (5 VDC nom.)	5 VDC	600 mA			79 %
TDR 3-0512		12 VDC	250 mA			80 %
TDR 3-0513		15 VDC	200 mA			81 %
TDR 3-0522		+12 VDC	125 mA	–12 VDC	125 mA	80 %
TDR 3-0523		+15 VDC	100 mA	–15 VDC	100 mA	81 %
TDR 3-1211	9 - 18 VDC (12 VDC nom.)	5 VDC	600 mA			81 %
TDR 3-1212		12 VDC	250 mA			82 %
TDR 3-1213		15 VDC	200 mA			82 %
TDR 3-1222		+12 VDC	125 mA	–12 VDC	125 mA	82 %
TDR 3-1223		+15 VDC	100 mA	–15 VDC	100 mA	83 %
TDR 3-2411	18 - 36 VDC (24 VDC nom.)	5 VDC	600 mA			81 %
TDR 3-2412		12 VDC	250 mA			82 %
TDR 3-2413		15 VDC	200 mA			83 %
TDR 3-2422		+12 VDC	125 mA	–12 VDC	125 mA	83 %
TDR 3-2423		+15 VDC	100 mA	–15 VDC	100 mA	83 %
TDR 3-4811	36 - 75 VDC (48 VDC nom.)	5 VDC	600 mA			81 %
TDR 3-4812		12 VDC	250 mA			82 %
TDR 3-4813		15 VDC	200 mA			82 %
TDR 3-4822		+12 VDC	125 mA	–12 VDC	125 mA	83 %
TDR 3-4823		+15 VDC	100 mA	–15 VDC	100 mA	83 %

Input Specifications

Input Current	- At no load	5 Vin models:	50 mA typ.
		12 Vin models:	30 mA typ.
		24 Vin models:	13 mA typ.
		48 Vin models:	10 mA typ.
	- At full load	5 Vin models:	790 mA max.
		12 Vin models:	320 mA max.
		24 Vin models:	160 mA max.
		48 Vin models:	80 mA max.
Surge Voltage		5 Vin models:	15 VDC max. (1 s max.)
		12 Vin models:	25 VDC max. (1 s max.)
		24 Vin models:	50 VDC max. (1 s max.)
		48 Vin models:	100 VDC max. (1 s max.)
Reflected Ripple Current		5 Vin models:	80 mAp-p typ.
		12 Vin models:	40 mAp-p typ.
		24 Vin models:	30 mAp-p typ.
		48 Vin models:	20 mAp-p typ.
Recommended Input Fuse		5 Vin models:	3'000 mA (slow blow)
		12 Vin models:	3'000 mA (slow blow)
		24 Vin models:	1'500 mA (slow blow)
		48 Vin models:	1'500 mA (slow blow)
			(The need of an external fuse has to be assessed in the final application.)
Input Filter			Internal Capacitor

Output Specifications

Voltage Set Accuracy			±1% max.
Regulation	- Input Variation (Vmin - Vmax)	single output models:	0.2% max.
	- Load Variation (0 - 100%)	single output models:	1% max.
		dual output models:	1% max. (Output 1)
			1% max. (Output 2)
	- Cross Regulation (25% / 100% asym. load)	dual output models:	5% max.
Ripple and Noise	- 20 MHz Bandwidth		30 mVp-p typ.
Capacitive Load	- single output	5 Vout models:	1'680 µF max.
		12 Vout models:	820 µF max.
		15 Vout models:	680 µF max.
	- dual output	12 / -12 Vout models:	470 / 470 µF max.
		15 / -15 Vout models:	330 / 330 µF max.
Minimum Load			Not required
Temperature Coefficient			±0.02 %/K max.
Start-up Time			5 ms typ.
Short Circuit Protection			Continuous, Automatic recovery
Transient Response	- Response Time		250 µs typ. (25% Load Step)

Safety Specifications

Safety Standards	- IT / Multimedia Equipment	EN 60950-1
		EN 62368-1
		IEC 60950-1
		IEC 62368-1
		UL 60950-1
		UL 62368-1
	- Certification Documents	www.tracopower.com/overview/tdr3
Pollution Degree		PD 2

All specifications valid at nominal voltage, full load and +25°C after warm-up time unless otherwise stated.

EMC Specifications

EMI Emissions	- Conducted Emissions		EN 55032 class A (with external filter)
			EN 55032 class B (with external filter)
	- Radiated Emissions		EN 55032 class A (with external filter)
			EN 55032 class B (with external filter)
		External filter proposal:	www.tracopower.com/overview/tdr3
EMS Immunity	- Electrostatic Discharge	Air:	EN 61000-4-2, ±8 kV, perf. criteria A
		Contact:	EN 61000-4-2, ±6 kV, perf. criteria A
	- RF Electromagnetic Field		EN 61000-4-3, 10 V/m, perf. criteria A
	- EFT (Burst) / Surge		EN 61000-4-4, ±2 kV, perf. criteria A
			EN 61000-4-5, ±1 kV, perf. criteria A
		Ext. input component:	220 µF / 100 V
	- Conducted RF Disturbances		EN 61000-4-6, 10 Vrms, perf. criteria A
	- PF Magnetic Field	Continuous:	EN 61000-4-8, 100 A/m, perf. criteria A
		1 s:	EN 61000-4-8, 1000 A/m, perf. criteria A

General Specifications

Relative Humidity		95% max. (non condensing)
Temperature Ranges	- Operating Temperature	–40°C to +85°C
	- Case Temperature	+100°C max.
	- Storage Temperature	–55°C to +125°C
Power Derating	- High Temperature	3.3 %/K above 70°C
Cooling System		Natural convection (20 LFM)
Remote Control	- Current Controlled Remote	On: open circuit
		Off: 2 to 4 mA current (internal 1 kΩ resistor)
	External circuit proposal:	www.tracopower.com/info/current-remote.pdf
	- Off Idle Input Current	2.5 mA max.
Altitude During Operation		5'000 m max.
Switching Frequency		100 kHz min. (RCC)
Insulation System		Basic Insulation
Isolation Test Voltage	- Input to Output, 60 s	1'600 VDC
Isolation Resistance	- Input to Output, 500 VDC	1'000 MΩ min.
Isolation Capacitance	- Input to Output, 100 kHz, 1 V	50 pF max.
Reliability	- Calculated MTBF	6'200'000 h (MIL-HDBK-217F, ground benign)
Environment	- Vibration	MIL-STD-810F
	- Thermal Shock	MIL-STD-810F
Housing Material		Non-conductive Plastic (UL94 V-0 rated)
Pin Material		Copper
Pin Foundation Plating		Nickel (40 - 120 µm)
Pin Surface Plating		Gold (25 - 75 nm), matte
Soldering Profile		Wave Soldering
		265°C / 10 s max.
Connection Type		THD (Through-Hole Device)
Weight		4.5 g
Environmental Compliance	- REACH Declaration	www.tracopower.com/info/reach-declaration.pdf
		REACH SVHC list compliant
		REACH Annex XVII compliant
	- RoHS Declaration	www.tracopower.com/info/rohs-declaration.pdf
		Exemptions: 7a, 7c-I

Supporting Documents

Overview Link (for additional Documents)	www.tracopower.com/overview/tdr3

All specifications valid at nominal voltage, full load and +25°C after warm-up time unless otherwise stated.

Outline Dimensions

Dimensions in mm (inch)
Tolerances: ±0.5 (±0.02)
Pin pitch tolerances ±0.25 (±0.01)

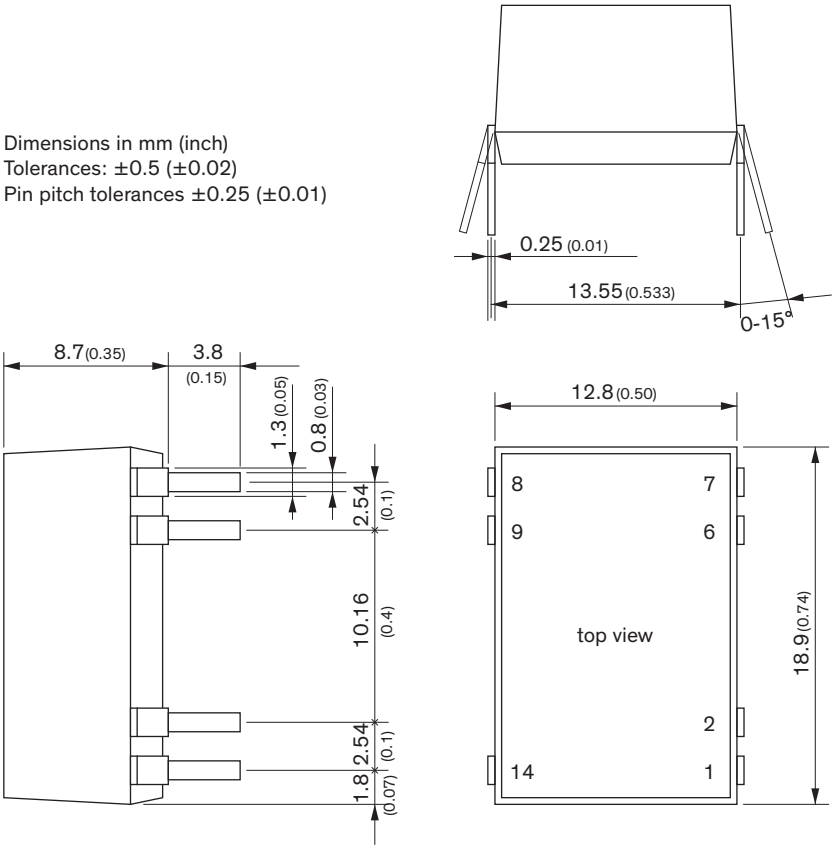

Pinout		
Pin	**Single**	**Dual**
1	–Vin (GND)	–Vin (GND)
2	Remote On/Off	Remote On/Off
6	NC	Common
7	NC	–Vout
8	+Vout	+Vout
9	–Vout	Common
14	+Vin (Vcc)	+Vin (Vcc)

NC: Not connected

© Copyright 2020 Traco Electronic AG