TRACO POWER

DC/DC Converter

TES 2H Series, 2 Watt

- **I/O isolation voltage 1'500 VDC**
- **Unregulated device**
- **Single and dual output models**
- **Input voltage 5, 12 and 24 VDC**
- **High efficiency up to 80%**
- **Operating Temperature range -40 to +90°C**
- **High accuracy of pin co-planarity**
- **Qualified for leadfree reflow solder process according IPC/JEDEC J-STD-020E**
- **Available in tape and reel package**
- **3-year product warranty**



With their small footprint these 2 Watt DC/DC converters are an ideal and economical solution for many applications where an isolated voltage is required. Typical applications are ground loop elimination, noise reduction, voltage isolation in digital interfaces and voltage conversion in distributed power systems. With a new package design these converters are qualified for the higher temperatures requested by lead-free reflow solder processes. For automated SMD production lines the devices can be supplied in standard tape and reel package.

Models

Order Code	Input Voltage Range	Output 1		Output 2		Efficiency
		Vnom	Imax	Vnom	Imax	typ.
TES 2-0510H	4.5 - 5.5 VDC (5 VDC nom.)	3.3 VDC	500 mA			70 %
TES 2-0511H		5 VDC	400 mA			73 %
TES 2-0512H		12 VDC	165 mA			77 %
TES 2-0521H		+5 VDC	200 mA	–5 VDC	200 mA	74 %
TES 2-0522H		+12 VDC	83 mA	–12 VDC	83 mA	76 %
TES 2-0523H		+15 VDC	66 mA	–15 VDC	66 mA	76 %
TES 2-1210H	10.8 - 13.2 VDC (12 VDC nom.)	3.3 VDC	500 mA			72 %
TES 2-1211H		5 VDC	400 mA			75 %
TES 2-1212H		12 VDC	165 mA			79 %
TES 2-1222H		+12 VDC	83 mA	–12 VDC	83 mA	80 %
TES 2-1223H		+15 VDC	66 mA	–15 VDC	66 mA	80 %
TES 2-2410H	21.6 - 26.4 VDC (24 VDC nom.)	3.3 VDC	500 mA			72 %
TES 2-2411H		5 VDC	400 mA			75 %
TES 2-2412H		12 VDC	165 mA			79 %
TES 2-2422H		+12 VDC	83 mA	–12 VDC	83 mA	79 %
TES 2-2423H		+15 VDC	66 mA	–15 VDC	66 mA	79 %

Input Specifications

Input Current	- At no load	5 Vin models:	60 mA typ.
		12 Vin models:	30 mA typ.
		24 Vin models:	15 mA typ.
	- At full load	5 Vin models:	500 mA typ.
		12 Vin models:	200 mA typ.
		24 Vin models:	100 mA typ.
Surge Voltage		5 Vin models:	9 VDC max. (1 s max.)
		12 Vin models:	18 VDC max. (1 s max.)
		24 Vin models:	30 VDC max. (1 s max.)
Under Voltage Lockout		5 Vin models:	8 VDC typ.
		12 Vin models:	16 VDC typ.
		24 Vin models:	34 VDC typ.
Recommended Input Fuse			(The need of an external fuse has to be assessed in the final application.)
Input Filter			Internal Capacitor

Output Specifications

Voltage Set Accuracy			±3% max. (at 60% load, 3.3 & 5 Vout models)
			±3% max. (at 100% load, other output models)
Regulation	- Input Variation (1% Vin step)	single output models:	1.5% max.
		dual output models:	1.5% max.
	- Load Variation	See application note:	www.tracopower.com/overview/tes2h
	- Voltage Balance (symmetrical load)	dual output models:	1% max.
Ripple and Noise	- 20 MHz Bandwidth		120 mVp-p max.
Capacitive Load	- single output	3.3 Vout models:	47 µF max.
		5 Vout models:	47 µF max.
		12 Vout models:	10 µF max.
	- dual output	5 / -5 Vout models:	10 / 10 µF max.
		12 / -12 Vout models:	4.7 / 4.7 µF max.
		15 / -15 Vout models:	4.7 / 4.7 µF max.
Minimum Load			2 % of Iout max. (Operation at lower load will not damage the converter, but it may not meet all specifications)
Temperature Coefficient			±0.02 %/K max.
Start-up Time			50 ms max.
Short Circuit Protection			Limited 0.5 s max., Automatic recovery

EMC Specifications

EMI Emissions	- Conducted Emissions		EN 55032 class A (with external filter)
	- Radiated Emissions		EN 55032 class A (with external filter)
		External filter proposal:	www.tracopower.com/overview/tes2h

General Specifications

Relative Humidity			95% max. (non condensing)
Temperature Ranges	- Operating Temperature		–40°C to +90°C
	- Case Temperature		+105°C max.
	- Storage Temperature		–50°C to +125°C
Power Derating	- High Temperature		4 %/K above 80°C
		See application note:	www.tracopower.com/overview/tes2h
Cooling System			Natural convection (20 LFM)
Regulator Topology			Push-Pull Converter
Switching Frequency			50 - 120 kHz (PFM)
			100 kHz typ. (PFM)

All specifications valid at nominal voltage, resistive full load and +25°C after warm-up time, unless otherwise stated.

Insulation System		Functional Insulation
Isolation Test Voltage	- Input to Output, 60 s	1'500 VDC
	- Input to Output, 1 s	1'800 VDC
Isolation Resistance	- Input to Output, 500 VDC	10'000 MΩ min.
Isolation Capacitance	- Input to Output, 100 kHz, 1 V	60 pF typ. 100 pF max.
Reliability	- Calculated MTBF	2'000'000 h (MIL-HDBK-217F, ground benign)
Moisture Sensitivity (MSL)		Level 2 (J-STD-033C)
Washing Process		Not allowed
Housing Material		Plastic resin (UL 94 V-0 rated)
Pin Material		Phosphor Bronze (C5191)
Pin Foundation Plating		Copper (1 - 3 µm)
Pin Surface Plating		Tin (7.5 µm min.), matte
Housing Type		Plastic Case
Mounting Type		PCB Mount
Connection Type		SMD (Surface-Mount Device)
Footprint Type		SMD8 (single output models) SMD10 (dual output models)
Soldering Profile		Lead-Free Reflow Soldering (acc. J-STD-020E)
	See application note:	www.tracopower.com/info/reflow-soldering.pdf
Weight	- single output	1.5 g
	- dual output	2.2 g
Environmental Compliance	- REACH Declaration	www.tracopower.com/info/reach-declaration.pdf REACH SVHC list compliant REACH Annex XVII compliant
	- RoHS Declaration	www.tracopower.com/info/rohs-declaration.pdf Exemptions: 7a (RoHS exemptions refer to the component concentration only, not to the overall concentration in the product (O5A rule).)
	- SCIP Reference Number	2c701e25-1552-4135-96f1-51ba816788e8

Supporting Documents

Overview Link (for additional Documents)	www.tracopower.com/overview/tes2h

All specifications valid at nominal voltage, resistive full load and +25°C after warm-up time, unless otherwise stated.

Outline Dimensions

Single Output Models

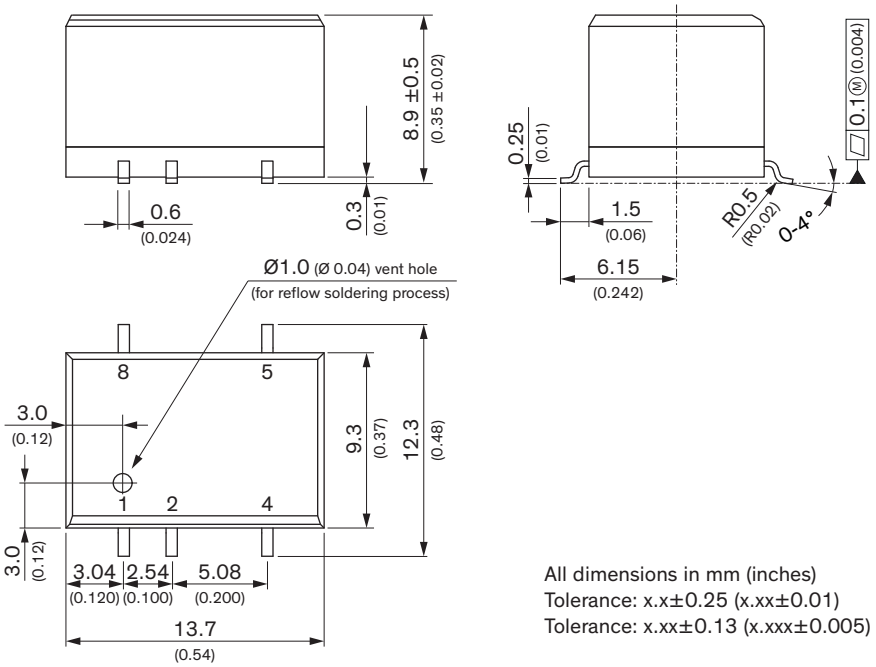

All dimensions in mm (inches)
Tolerance: x.x±0.25 (x.xx±0.01)
Tolerance: x.xx±0.13 (x.xxx±0.005)

Pinout	
Pin	**Single**
1	–Vin (GND)
2	+Vin (Vcc)
4	–Vout
5	+Vout
8	NTC

NTC: Not to connect

Dual Output Models

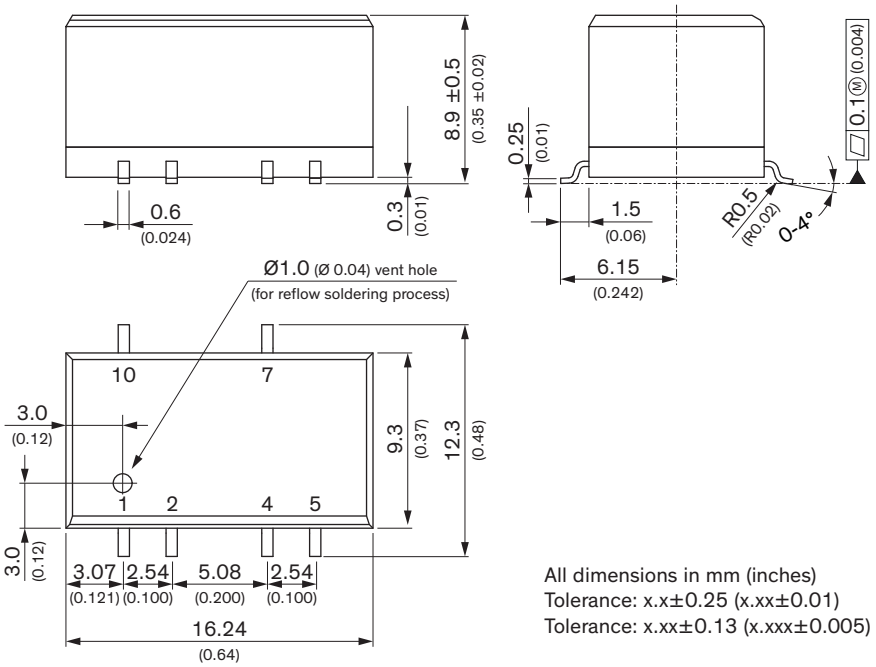

All dimensions in mm (inches)
Tolerance: x.x±0.25 (x.xx±0.01)
Tolerance: x.xx±0.13 (x.xxx±0.005)

Pinout	
Pin	**Dual**
1	–Vin (GND)
2	+Vin (Vcc)
4	Common
5	–Vout
7	+Vout
10	NTC

NTC: Not to connect

All specifications valid at nominal voltage, resistive full load and +25°C after warm-up time, unless otherwise stated.

Recommended Solder Pad Layout

Single Output Models

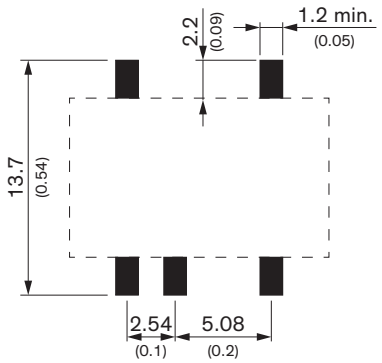

Dual Output Models

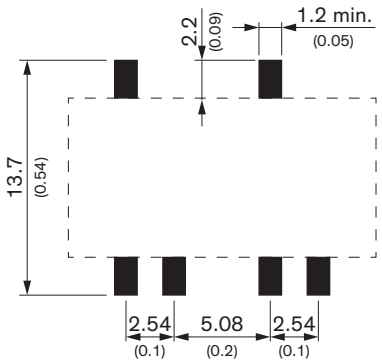

Dimensions in mm (inch)

© Copyright 2024 Traco Electronic AG