TRACO POWER

DC/DC Converter

TES 5WI Series, 5 Watt

- **Compact SMD package**
- **33.4 x 25.6 mm footprint**
- **Ultra-wide 4:1 input voltage range**
- **I/O isolation 1500 VDC**
- **Operating temp. range −40°C to +70°C**
- **Short circuit protection**
- **Input filter to meet EN 55032, conducted class A**
- **Remote On/Off**
- **High accuracy of pin co-planarity**
- **3-year product warranty**



The TES 5WI series is a family of high performance 5W DC/DC converter modules in a low profile SMD package with compact dimensions. The 14 modules feature ultrawide 4:1 input ranges with tightly regulated output voltage. High efficiency allows an operating temperature range of −40 to +70°C at full load. Further features are built-in EMI-filter to meet EN 55032 conducted class A without external components and remote On/Off control. The products comply with IPC J-STD-020D and are qualified for high temperature lead-free reflow solder process

Models

Order Code	Input Voltage Range	Output 1		Output 2		Efficiency
		Vnom	Imax	Vnom	Imax	typ.
TES 5-2410WI	9 - 36 VDC (24 VDC nom.)	3.3 VDC	1'200 mA			76 %
TES 5-2411WI		5 VDC	1'000 mA			80 %
TES 5-2412WI		12 VDC	420 mA			83 %
TES 5-2413WI		15 VDC	335 mA			83 %
TES 5-2421WI		+5 VDC	500 mA	−5 VDC	500 mA	80 %
TES 5-2422WI		+12 VDC	210 mA	−12 VDC	210 mA	83 %
TES 5-2423WI		+15 VDC	165 mA	−15 VDC	165 mA	83 %
TES 5-4810WI	18 - 75 VDC (48 VDC nom.)	3.3 VDC	1'200 mA			76 %
TES 5-4811WI		5 VDC	1'000 mA			80 %
TES 5-4812WI		12 VDC	420 mA			83 %
TES 5-4813WI		15 VDC	335 mA			83 %
TES 5-4821WI		+5 VDC	500 mA	−5 VDC	500 mA	80 %
TES 5-4822WI		+12 VDC	210 mA	−12 VDC	210 mA	83 %
TES 5-4823WI		+15 VDC	165 mA	−15 VDC	165 mA	83 %

Input Specifications

Input Current	- At no load	24 Vin models:	20 mA typ.
		48 Vin models:	10 mA typ.
	- At full load	24 Vin models:	250 mA typ.
		48 Vin models:	125 mA typ.
Surge Voltage		24 Vin models:	50 VDC max. (1 s max.)
		48 Vin models:	100 VDC max. (1 s max.)
Start-up Voltage		24 Vin models:	7 VDC min. / 8 VDC typ. / 9 VDC max.
		48 Vin models:	14 VDC min. / 16 VDC typ. / 18 VDC max.
Under Voltage Lockout		24 Vin models:	6 VDC min. / 7 VDC typ. / 8 VDC max.
		48 Vin models:	13 VDC min. / 15 VDC typ. / 17 VDC max.
Reflected Ripple Current		24 Vin models:	10 mAp-p typ.
		48 Vin models:	5 mAp-p typ.
Recommended Input Fuse			(The need of an external fuse has to be assessed in the final application.)
Short Circuit Input Power			3 W max.

Output Specifications

Voltage Set Accuracy			±2% max.
Regulation	- Input Variation (Vmin - Vmax)	single output models:	1% max.
		dual output models:	1% max.
	- Load Variation (10 - 100%)	single output models:	1% max.
		dual output models:	1% max. (Output 1)
			1% max. (Output 2)
	- Voltage Balance (symmetrical load)	dual output models:	3% max.
Ripple and Noise	- 20 MHz Bandwidth		85 mVp-p max.
Capacitive Load	- single output	3.3 Vout models:	2'000 µF max.
		5 Vout models:	2'000 µF max.
		12 Vout models:	470 µF max.
		15 Vout models:	330 µF max.
	- dual output	5 / -5 Vout models:	680 / 680 µF max.
		12 / -12 Vout models:	330 / 330 µF max.
		15 / -15 Vout models:	220 / 220 µF max.
Minimum Load			10 % of Iout max. (Operation at lower load will not damage the converter, but it may not meet all specifications)
Temperature Coefficient			±0.02 %/K max.
Start-up Time			10 ms max.
Short Circuit Protection			Continuous, Automatic recovery
Overload Protection			Foldback Mode
Output Current Limitation			115% min. of Iout max.
Transient Response	- Response Deviation		2% typ. / 6% max. (25% Load Step)
	- Response Time		250 µs typ. / 500 µs max. (25% Load Step)

Safety Specifications

Standards	- IT / Multimedia Equipment	Designed for IEC/EN/UL 62368-1 (not certified)

EMC Specifications

EMI (Emissions)	- Conducted Emissions	EN 55032 class A (internal filter)
		FCC 47 Part 15 class A (internal filter)
	- Radiated Emissions	EN 55032 class A (internal filter)
		FCC 47 Part 15 class A (internal filter)

All specifications valid at nominal voltage, resistive full load and +25°C after warm-up time, unless otherwise stated.

General Specifications

Relative Humidity		95% max. (non condensing)
Temperature Ranges	- Operating Temperature	–40°C to +70°C (without derating)
	- Case Temperature	+100°C max.
	- Storage Temperature	–50°C to +125°C
Power Derating	- High Temperature	3.3 %/K above 70°C
	See application note:	www.tracopower.com/overview/tes5wi
Cooling System		Natural convection (20 LFM)
Remote Control	- Voltage Controlled Remote (passive = on)	On: 2.5 to 5.5 VDC or open circuit Off: -0.7 to +0.8 VDC or short circuit Refers to 'Remote' and '-Vin' Pin
	- Off Idle Input Current	10 mA max.
	- Remote Pin Input Current	-0.7 mA max.
Regulator Topology		Push-Pull Converter
Switching Frequency		210 - 350 kHz (PFM) 340 kHz typ. (PFM)
Insulation System		Functional Insulation
Isolation Test Voltage	- Input to Output, 60 s	1'500 VDC
Isolation Resistance	- Input to Output, 500 VDC	1'000 MΩ min.
Isolation Capacitance	- Input to Output, 100 kHz, 1 V	650 pF typ. 750 pF max.
Reliability	- Calculated MTBF	1'000'000 h (MIL-HDBK-217F, ground benign)
Moisture Sensitivity (MSL)		Level 2 (J-STD-033C)
Washing Process		Not allowed
Housing Material		Plastic resin (UL 94 V-0 rated)
Pin Material		Phosphor Bronze (C5191)
Pin Foundation Plating		Copper (1 - 3 µm)
Pin Surface Plating		Tin (7.5 µm min.), matte
Housing Type		Plastic Case
Mounting Type		PCB Mount
Connection Type		SMD (Surface-Mount Device)
Footprint Type		SMD24
Soldering Profile		Lead-Free Reflow Soldering (acc. J-STD-020E)
	See application note:	www.tracopower.com/info/reflow-soldering.pdf
Weight		14 g
Environmental Compliance	- REACH Declaration	www.tracopower.com/info/reach-declaration.pdf REACH SVHC list compliant REACH Annex XVII compliant
	- RoHS Declaration	www.tracopower.com/info/rohs-declaration.pdf Exemptions: 7a (RoHS exemptions refer to the component concentration only, not to the overall concentration in the product (O5A rule).)
	- SCIP Reference Number	c77aae5d-5033-4d0d-826b-295f60f75778

Supporting Documents

Overview Link (for additional Documents)	www.tracopower.com/overview/tes5wi

All specifications valid at nominal voltage, resistive full load and +25°C after warm-up time, unless otherwise stated.

Outline Dimensions

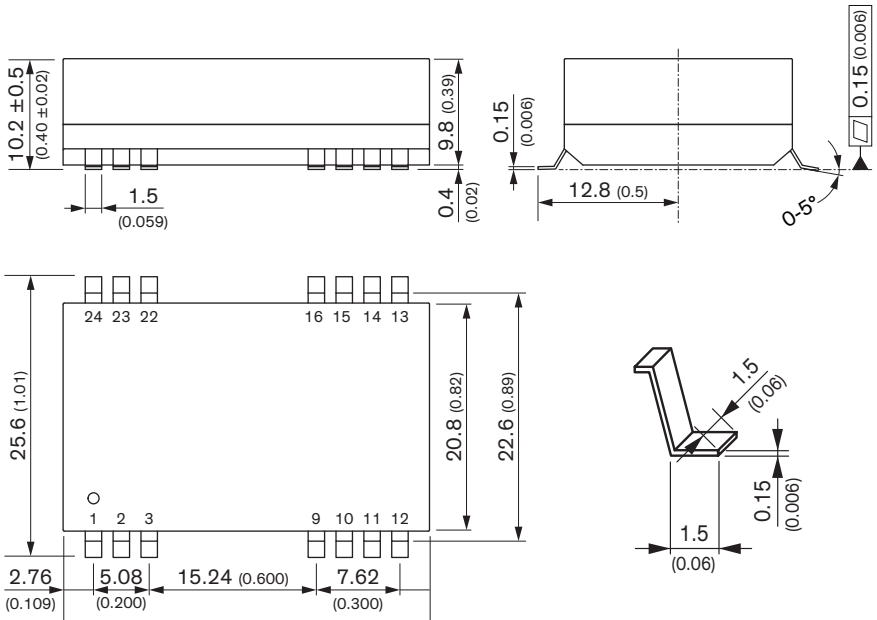

All dimensions in mm (inches)
Tolerance: x.x±0.25 (x.xx±0.01)
Tolerance: x.xx±0.13 (x.xxx±0.005)
Pin tolerance: ±0.05 (±0.002)

Pinout		
Pin	**Single**	**Dual**
1	Remote On/Off	Remote On/Off
2	–Vin (GND)	–Vin (GND)
3	–Vin (GND)	–Vin (GND)
9	NC	Common
10	NC	NC
11	NC	–Vout
12	NC	NC
13	NC	NC
14	+Vout	+Vout
15	NC	NC
16	–Vout	Common
22	+Vin (Vcc)	+Vin (Vcc)
23	+Vin (Vcc)	+Vin (Vcc)
24	NC	NC

NC: Not connected

Recommended Solder Pad Layout

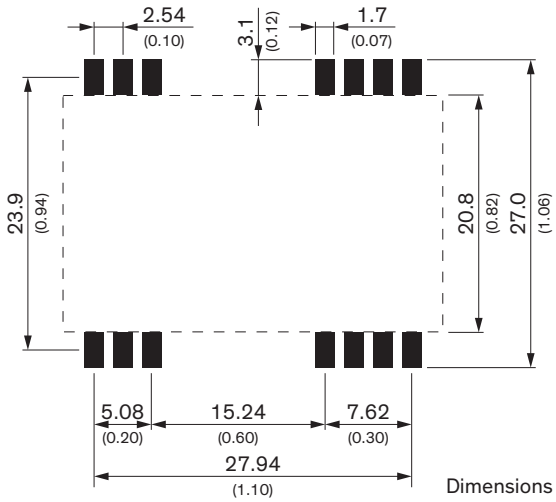

Dimensions in mm (inch)

© Copyright 2025 Traco Electronic AG