DC/DC Converters

THL 3WI(SM) Series, 3 Watt

c US 226037

CB Scheme IEC 60950-1

Features

- Compact design in SMD or DIP package
- Ultra wide 4:1 input voltage range
- Fully regulated outputs
- I/O isolation 1500 VDC
- SMD version qualfied for leadfree re flow solder process, MSL 2a
- Operating temp. range –40°C to +85°C
- Short circuit protection
- Remote On/Off control
- Input filter to meet EN 55022, class A without external components
- 3-year product warranty

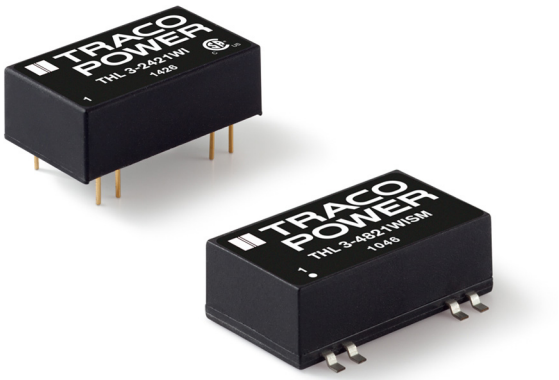

The THL 3WI(SM) series is a family of compact 3 W dc/dc-converters with 4:1 input voltage ranges. The product is available in SMD- or DIP-package. The internal filter which meets EN55022 Class A without external components makes the converter easy to design in.
They come with remote On/Off and short circuit protection. THL 3WI(SM) converter is an excellent solution for data- and telecom applications and for instrumentation and Industrial electronics.

Models

Order code DIP models	Order code SMD models	Input voltage range	Output voltage	Output current max.	Efficiency typ.
THL 3-2410WI	THL 3-2410WISM		3.3 VDC	600 mA	75 %
THL 3-2411WI	THL 3-2411WISM		5.0 VDC	600 mA	78 %
THL 3-2412WI	THL 3-2412WISM		12 VDC	250 mA	80 %
THL 3-2413WI	THL 3-2413WISM	**9 – 36 VDC**	15 VDC	200 mA	80 %
THL 3-2415WI	THL 3-2415WISM	(24 VDC nominal)	24 VDC	125 mA	80 %
THL 3-2421WI	THL 3-2421WISM		±5 VDC	±300 mA	77 %
THL 3-2422WI	THL 3-2422WISM		±12 VDC	±125 mA	80 %
THL 3-2423WI	THL 3-2423WISM		±15 VDC	±100 mA	80 %
THL 3-4810WI	THL 3-4810WISM		3.3 VDC	600 mA	75 %
THL 3-4811WI	THL 3-4811WISM		5.0 VDC	600 mA	78 %
THL 3-4812WI	THL 3-4812WISM		12 VDC	250 mA	80 %
THL 3-4813WI	THL 3-4813WISM	**18 – 75 VDC**	15 VDC	200 mA	80 %
THL 3-4815WI	THL 3-4815WISM	(48 VDC nominal)	24 VDC	125 mA	80 %
THL 3-4821WI	THL 3-4821WISM		±5 VDC	±300 mA	77 %
THL 3-4822WI	THL 3-4822WISM		±12 VDC	±125 mA	80 %
THL 3-4823WI	THL 3-4823WISM		±15 VDC	±100 mA	80 %

Input Specifications

Input current at no load (nominal input voltage)	24 Vin models:	30 mA typ.
	48 Vin models:	20 mA typ.
Input current at full load (nominal input voltage)	24 Vin; 3.3 VDC model:	110 mA typ.
	24 Vin other models:	160 mA typ.
	48 Vin; 3.3 VDC model:	55 mA typ.
	48 Vin other models:	80 mA typ.
Surge voltage (1 sec. max.)	24 Vin models:	50 V max.
	48 Vin models:	100 V max.
Conducted noise		EN 55022 level A, FCC part 15, level A without external components
Recommended input fuse (slow blow)	24 V models:	1500 mA
	48 V models:	800 mA

Output Specifications

Voltage set accuracy		±2 % max
Regulation	– Input variation Vin min. to Vin max.	1.0 % max.
	– Load variation 15 – 100 %	1.0 % max.
Minimum load		15 % of rated max current (operation at lower load condition is safe but a higher output ripple will be experienced)
Temperature coefficient		±0.02 %/K
Ripple and noise (20 MHz bandwidth)		50 mVp-p max.
Transient response (25 % load step change)		
	– Recovery time	300 µs typ.
	– Deviation	±3 %
Short circuit protection		indefinite, automatic recovery
Capacitive load	3.3 & 5 VDC models:	220 µF max.
	all other models:	47 µF max.

General Specifications

Temperature	– Operating (natural convection cooling 20 LFM)	–40°C to +85°C
	– Storage	–40°C to +125°C
	– Case	+105°C max.
Load derating (natural convection cooling 20 LFM)	DIP models:	2.5 %/K above +65°C
	SMD 3.3 & 5.0 VDC models:	2.2 %/K above +55°C
	SMD other models:	2.5 %/K above +60°C
Humidity (non condensing)		95 % rel. H max.
Reliability, calculated MTBF (MIL-HDBK-217F, at +25°C, ground benign)		>300'000 h
Isolation voltage (60 sec.)	– Input/Output	1'500 VDC
Isolation capacitance	– Input/Output	500 pF max.
Isolation resistance	– Input/Output (500 VDC)	>1 GOhm
Safety standard (designed to meet)		IEC 60950-1, UL 60950-1
	– Certification documents	www.tracopower.com/overview/thl3wism
Switching frequency		350 kHz
Altitude during operation		5'000 m max. (16'400 ft) approved
Remote On/Off	– On:	2.5 to 5.5 VDC or open circuit
	– Off:	–0.7 to 0.8 VDC
	– Off stand by input current	5 mA max.
Environmental compliance	– Reach	www.tracopower.com/products/reach-declaration.pdf
	– RoHS	RoHS directive 2011/65/EU

All specifications valid at nominal input voltage, full load and +25°C after warm-up time unless otherwise stated.

Pysical Specifications

Casing material		non-conductive plastic (UL94V-0 rated)
Pin material	DIP models: SMD models:	Phosphor bronze Copper alloy with gold plated nickel subplate
Package weight	DIP models: SMD models:	5.4 g (0.19 oz) 4.2 g (0.14 oz)
Soldering profile for DIP-package models		max. 265°C / 10 sec. (wave soldering)
Lead-free reflow solder process for SMD-package models		as per J-STD-020D.01 (to find at: www.jedec.org - free registration required)
Moisture sensivity level (for SMD-package models)		level 2a as per J-STD-033B.01 (to find at: www.jedec.org - free registration required)

Supporting documents: www.tracopower.com/overview/thl3wi
www.tracopower.com/overview/thl3wism

Outline Dimensions

DIP-Models

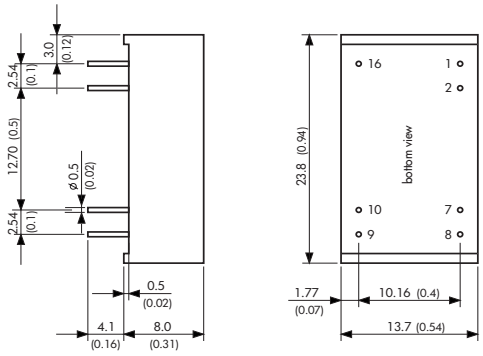

SMD-Models

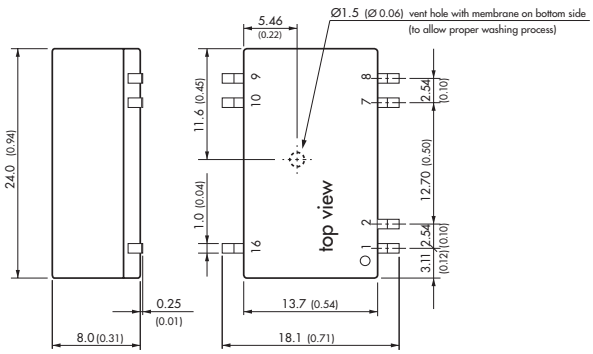

Pin-Out		
Pin	**Single**	**Dual**
1	–Vin (GND)	–Vin (GND)
2	Remote On/Off	Remote On/Off
7	ntc.	ntc.
8	ntc.	Common
9	+Vout	+Vout
10	–Vout	–Vout
16	+Vin (Vcc)	+Vin (Vcc)

ntc. = not to connect

Dimensions in [mm], () = Inch
Tolerances: ±0.25 (±0.01)
Pin pich tolerances: ±0.13 (±0.005)