High Voltage Power Supplies

THV Series, 2 – 3 Watt

Features

- Compact high voltage power supplies
- Full SMD design with ceramic capacitors for highest reliability
- Positive or negative polarity models
- PCB- and flying lead versions
- Excellent output stability
- Low temperature coefficient
- Ultra low ripple
- Remote voltage programming 0 to 100 %
- Short circuit protection
- Shielded metal case
- 3-year product warranty



The THV / SHV series are regulated miniature high voltage power modules using SMD and hybrid technology. They are designed for PCB mounting (THV series) or chassis mounting (SHV series). The use of high stability components guarantees a minimal temperature drift and a very stable output voltage. Typical applications for these high voltage power supplies are photomultiplier tubes, gas chromatography, analytical instruments and wherever where small size and high output voltage stability is requested.

Models

Order code	Input voltage range	Output voltage	Output current max.*	Case
THV 12-180P		0...+180 VDC	12 mA	A
THV 12-180N		0...–180 VDC	12 mA	A
THV 12-300P		0...+300 VDC	10 mA	A
THV 12-300N	**12 VDC**	0...–300 VDC	10 mA	A
THV 12-350P	10.8 – 13.2 VDC	0...+350 VDC	7 mA	A
THV 12-350N		0...–350 VDC	7 mA	A
THV 12-500P		0...+500 VDC	6 mA	B
THV 12-500N		0...–500 VDC	6 mA	B
THV 12-1000P		0...+1000 VDC	2 mA	B
THV 12-1000N		0...–1000 VDC	2 mA	B
THV 12-1500P	**12 VDC**	0...+1500 VDC	1.3 mA	B
THV 12-1500N	10.8 – 16.5 VDC	0...–1500 VDC	1.3 mA	B
THV 12-2000P		0...+2000 VDC	1 mA	B
THV 12-2000N		0...–2000 VDC	1 mA	B
SHV 12-0.5 K 6000P**	**12 VDC**	0...+500 VDC	6 mA	C
SHV 12-0.5 K 6000N**	10.8 – 13.2 VDC	0...–500 VDC	6 mA	C
SHV 12-1.0 K 2000P**		0...+1000 VDC	2 mA	C
SHV 12-1.0 K 2000N**		0...–1000 VDC	2 mA	C
SHV 12-1.5 K 1300P**	**12 VDC**	0...+1500 VDC	1.3 mA	C
SHV 12-1.5 K 1300N**	10.8 – 16.5 VDC	0...–1500 VDC	1.3 mA	C
SHV 12-2.0 K 1000P		0...+2000 VDC	1 mA	C
SHV 12-2.0 K 1000N		0...–2000 VDC	1 mA	C

*see page 2 for max. output current vs. output voltage
**EOL announcement September 2018 www.tracopower.com/overview/thv
Appendix P for positive output polarity / Appendix N for negative output polarity

Input Specifications

Input voltage	180, 300, 350 & 500 VDC models: other VDC models:	+10.8 to +13.2 VDC +10.8 to +16.5 VDC
Reverse voltage protection		none
Conducted noise (input)		internal filter

Output Specifications

Max. output current vs output voltage		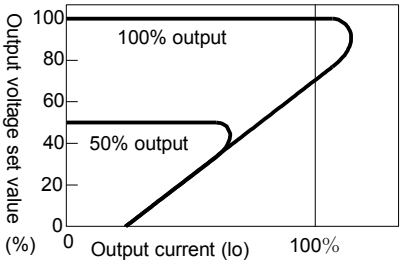
Voltage set accuracy		±5 %
Voltage adjustement range (adjustable with external voltage 0 to +4 VDC or with 5 kOhm variable resistor)		0 – 100 %
Remote On/Off control (not for 180, 300, 350 VDC models)		On = pin 2 to pin 5 open Off = pin 2 to pin 5 short
Regulation	– Input variation Vin min. to Vin max. – Load variation 0 – 100 %	0.03 % max. 0.5 % max.
Ripple and noise (20 MHz Bandwidth)	180, 300 & 350 VDC models: 500 VDC models: 1.0, 1.5 & 2.0 kVDC models:	30 mVpk-pk typ. 10 mVpk-pk typ. 8 mVpk-pk typ.
Temperature coefficient		±0.01 %/K
Stability		0.05 % 8h after warm-up time
Output current limitation		105 % of Iout max., fold back
Short circuit protection		indefinite, automatic recovery

General Specifications

Temperature ranges	– Operating – Case temperature – Storage	–10°C to +60°C +95°C max. –25°C to +85°C
Derating		4 %/K above 50°C
Humidity (non condensing)		95 % rel H max.
Efficiency		60 – 65 %
Reliability, calculated MTBF (MIL-HDBK-217F, at +25°C, ground benign)		>300'000 h
Isolation (Input/Output)	– Voltage	none (–Vin,Common,Case are tied together internally)
Switching frequency		125 kHz typ. (fixed)
Vibration		5 – 100 Hz amplitude 10 mm pk-pk 10 – 55 Hz acceleration 2 G
Thermal shock		acceleration 20 G max. time 11 ms.
Environmental compliance	– Reach – RoHS	www.tracopower.com/overview/thv RoHS Directive 2011/65/EU

All specifications valid at nominal input voltage, full load and +25°C after warm-up time unless otherwise stated.

Physical Specifications

Casing material		Steel chrome-nickel plated
Weight	THV models case A :	**47 g** (1.66 oz)
	THV models case B :	**65 g** (2.29 oz)
	SHV models :	**98 g** (3.46 oz)
Soldering temperature		max. 265°C / 10 sec.

Connection Diagram

Connection for remote control by variable resistor

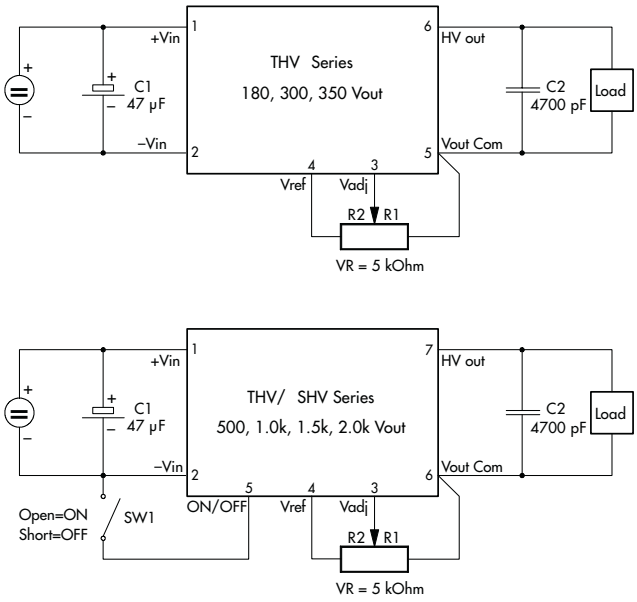

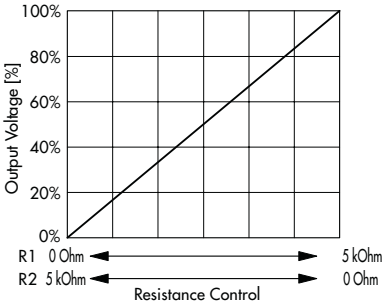

Connection for remote control voltage control

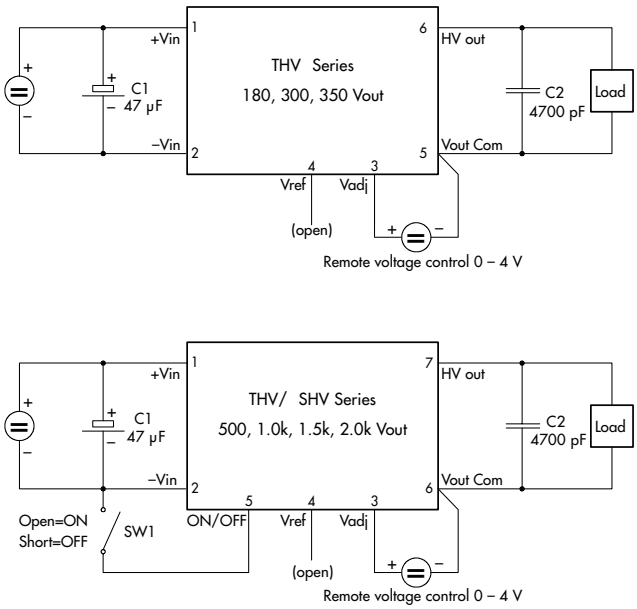

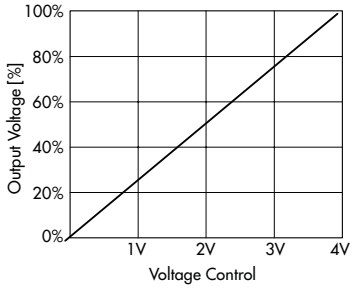

All specifications valid at nominal input voltage, full load and +25°C after warm-up time unless otherwise stated.

Outline Dimensions

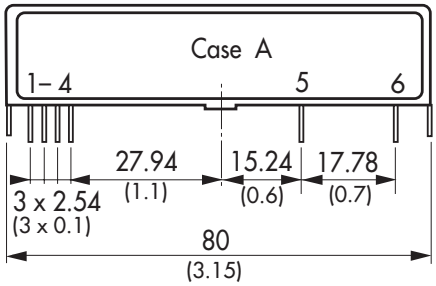

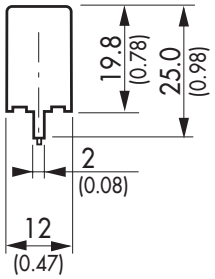

Pin-Out		
Pin	**Case A**	**Case B**
1	+Vin (Vcc)	+Vin (Vcc)
2	–Vin (GND)	–Vin (GND)
3	V adj.	V adj.
4	V ref.	V ref.
5	Common	ON/OFF
6	Vout	Common
7	no pin	Vout

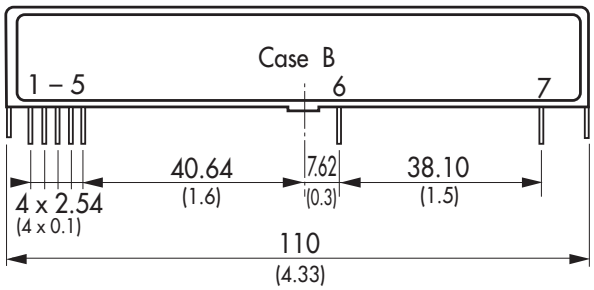

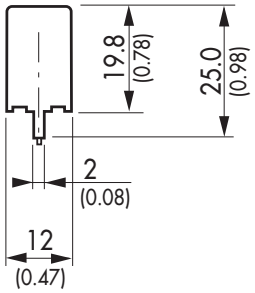

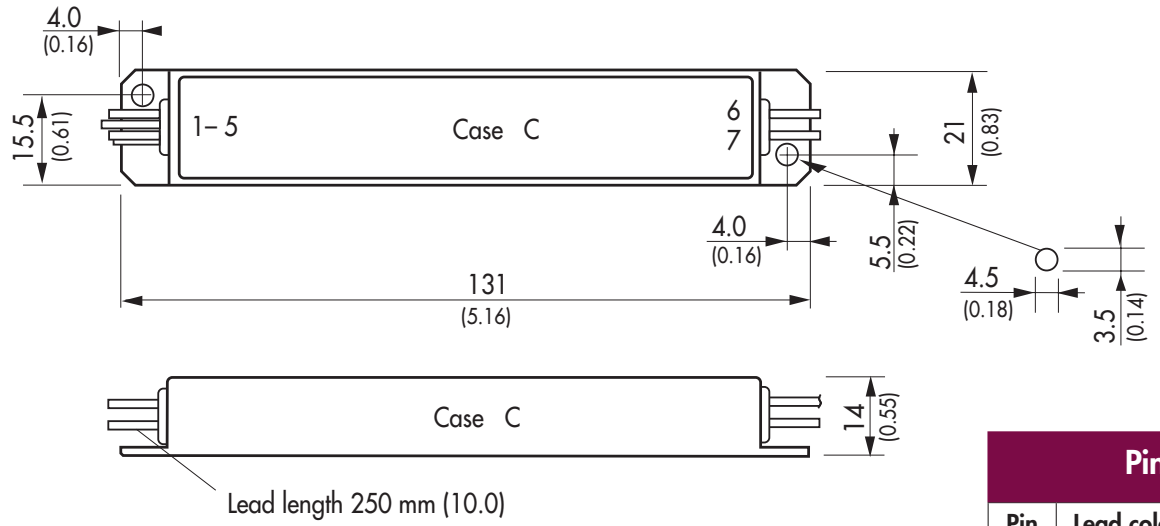

Pin-Out		
Pin	**Lead color**	**Case C**
1	red	+Vin (Vcc)
2	black	–Vin (GND)
3	yellow	V adj.
4	orange	V ref.
5	blue	ON/OFF
6	black	Common
7	red	Vout

Dimensions in [mm], () = Inch
Pin diameter: 0.65 ±0.05 (0.03 ±0.002)
Tolerances: ±0.5 (±0.02)