TRACO POWER

DC/DC Converter

TRN 1 Series, 1 Watt

- **Compact SIP package 11,9 x 7,7 x 11,0 mm**
- **Fully regulated outputs**
- **Input Voltage range 4.5-13.2, 9-18, 18-36, 36-75 VDC**
- **I/O-isolation 1‘600 VDC**
- **Operating temperature range −40°C to +90°C without derating**
- **Short circuit protection**
- **Designed to meet IEC/EN/UL 62368-1 (not certified)**
- **3-year product warranty**



The TRN 1 Series comprises 1 Watt fully regulated, high performance DC/DC converters. They come in a compact cubical package of only 1.00 cm³. Full load operation is reliable up tp 90°C environment temperature. With 1’600 VDC I/O isolation voltage, and short current protection they cover a wide range of application when space is limited. The input of the converters is designed for a wide voltage range (2:1) and minimum load is not required. The functional I/O-isolation system is designed to meet IEC/EN/UL 62368-1 (not certified) with a test voltage (60 s) of 1600 VDC.

Models

Order Code	Input Voltage Range	Output 1		Output 2		Efficiency
		Vnom	Imax	Vnom	Imax	typ.
TRN 1-0510	4.5 - 13.2 VDC (9 VDC nom.)	3.3 VDC	300 mA			77 %
TRN 1-0511		5 VDC	200 mA			79 %
TRN 1-0512		12 VDC	90 mA			81 %
TRN 1-0513		15 VDC	70 mA			82 %
TRN 1-0515		24 VDC	45 mA			83 %
TRN 1-0521		+5 VDC	100 mA	−5 VDC	100 mA	79 %
TRN 1-0522		+12 VDC	45 mA	−12 VDC	45 mA	83 %
TRN 1-0523		+15 VDC	35 mA	−15 VDC	35 mA	80 %
TRN 1-1210	9 - 18 VDC (12 VDC nom.)	3.3 VDC	300 mA			77 %
TRN 1-1211		5 VDC	200 mA			80 %
TRN 1-1212		12 VDC	90 mA			81 %
TRN 1-1213		15 VDC	70 mA			83 %
TRN 1-1215		24 VDC	45 mA			83 %
TRN 1-1221		+5 VDC	100 mA	−5 VDC	100 mA	79 %
TRN 1-1222		+12 VDC	45 mA	−12 VDC	45 mA	83 %
TRN 1-1223		+15 VDC	35 mA	−15 VDC	35 mA	80 %
TRN 1-2410	18 - 36 VDC (24 VDC nom.)	3.3 VDC	300 mA			77 %
TRN 1-2411		5 VDC	200 mA			81 %
TRN 1-2412		12 VDC	90 mA			82 %
TRN 1-2413		15 VDC	70 mA			83 %
TRN 1-2415		24 VDC	45 mA			82 %
TRN 1-2421		+5 VDC	100 mA	−5 VDC	100 mA	79 %
TRN 1-2422		+12 VDC	45 mA	−12 VDC	45 mA	82 %
TRN 1-2423		+15 VDC	35 mA	−15 VDC	35 mA	80 %
TRN 1-4810	36 - 75 VDC (48 VDC nom.)	3.3 VDC	300 mA			77 %
TRN 1-4811		5 VDC	200 mA			78 %
TRN 1-4812		12 VDC	90 mA			80 %
TRN 1-4813		15 VDC	70 mA			81 %
TRN 1-4815		24 VDC	45 mA			81 %
TRN 1-4821		+5 VDC	100 mA	−5 VDC	100 mA	78 %
TRN 1-4822		+12 VDC	45 mA	−12 VDC	45 mA	81 %
TRN 1-4823		+15 VDC	35 mA	−15 VDC	35 mA	79 %

Input Specifications

Input Current	- At no load	9 Vin models:	35 mA typ.
		12 Vin models:	20 mA typ.
		24 Vin models:	10 mA typ.
		48 Vin models:	5 mA typ.
Surge Voltage		9 Vin models:	15 VDC max. (1 s max.)
		12 Vin models:	25 VDC max. (1 s max.)
		24 Vin models:	50 VDC max. (1 s max.)
		48 Vin models:	100 VDC max. (1 s max.)
Reflected Ripple Current			30 mAp-p typ.
Recommended Input Fuse		9 Vin models:	500 mA (slow blow)
		12 Vin models:	315 mA (slow blow)
		24 Vin models:	160 mA (slow blow)
		48 Vin models:	160 mA (slow blow)
			(The need of an external fuse has to be assessed in the final application.)
Input Filter			Internal Capacitor

Output Specifications

Voltage Set Accuracy			±1% max.
Regulation	- Input Variation (Vmin - Vmax)	single output models:	0.2% max.
		dual output models:	0.2% max.
	- Load Variation (0 - 100%)	single output models:	1% max.
		dual output models:	1% max. (Output 1)
			1% max. (Output 2)
	- Cross Regulation (25% / 100% asym. load)	dual output models:	5% max.
Ripple and Noise	- 20 MHz Bandwidth		50 mVp-p typ.
Capacitive Load	- single output	3.3 Vout models:	1'680 µF max.
		5 Vout models:	820 µF max.
		12 Vout models:	470 µF max.
		15 Vout models:	330 µF max.
		24 Vout models:	160 µF max.
	- dual output	5 / -5 Vout models:	470 / 470 µF max.
		12 / -12 Vout models:	330 / 330 µF max.
		15 / -15 Vout models:	220 / 220 µF max.
Minimum Load			Not required
Temperature Coefficient			±0.02 %/K max.
Start-up Time			5 ms typ. / 15 ms max.
Short Circuit Protection			Continuous, Automatic recovery
Output Current Limitation			200% typ. of Iout max.
Transient Response	- Response Deviation		3% typ. (25% Load Step)
	- Response Time		500 µs typ. (25% Load Step)

Safety Specifications

Standards	- IT / Multimedia Equipment	Designed for IEC/EN/UL 62368-1 (not certified)

EMC Specifications

EMI Emissions	- Conducted Emissions		EN 55032 class A (with external filter)
			EN 55032 class B (with external filter)
	- Radiated Emissions		EN 55032 class A (with external filter)
			EN 55032 class B (with external filter)
		External filter proposal:	www.tracopower.com/overview/trn1

All specifications valid at nominal voltage, resistive full load and +25°C after warm-up time, unless otherwise stated.

EMS Immunity			EN 55024 (IT Equipment)
			EN 55035 (Multimedia)
	- Electrostatic Discharge	Air:	EN 61000-4-2, ±8 kV, perf. criteria A
		Contact:	EN 61000-4-2, ±6 kV, perf. criteria A
	- RF Electromagnetic Field		EN 61000-4-3, 10 V/m, perf. criteria A
	- EFT (Burst) / Surge		EN 61000-4-4, ±2 kV, perf. criteria A
			EN 61000-4-5, ±1 kV, perf. criteria A
		Ext. input component:	Nippon chemi-con KY 220 µF/100 V
	- Conducted RF Disturbances		EN 61000-4-6, 10 Vrms, perf. criteria A
	- PF Magnetic Field	Continuous:	EN 61000-4-8, 100 A/m, perf. criteria A
		1 s:	EN 61000-4-8, 1000 A/m, perf. criteria A

General Specifications

Relative Humidity			95% max. (non condensing)
Temperature Ranges	- Operating Temperature		–40°C to +90°C (without derating)
	- Case Temperature		+105°C max.
	- Storage Temperature		–55°C to +125°C
Power Derating	- High Temperature		6.7 %/K above 90°C
		See application note:	www.tracopower.com/overview/trn1
Cooling System			Natural convection (20 LFM)
Regulator Topology			RCC Converter
Switching Frequency			100 kHz min. (PFM)
Insulation System			Functional Insulation
Isolation Test Voltage	- Input to Output, 60 s		1'600 VDC
Isolation Resistance	- Input to Output, 500 VDC		1'000 MΩ min.
Isolation Capacitance	- Input to Output, 100 kHz, 1 V		75 pF max.
Reliability	- Calculated MTBF		7'400'000 h (MIL-HDBK-217F, ground benign)
Washing Process			According to Cleaning Guideline www.tracopower.com/info/cleaning.pdf
Environment	- Vibration		MIL-STD-810F
	- Thermal Shock		MIL-STD-810F
Housing Material			Non-conductive Plastic (UL 94 V-0 rated)
Potting Material			Silicone (UL 94 V-0 rated)
Pin Material			Copper
Pin Foundation Plating			Nickel (0.3 - 0.9 µm)
Pin Surface Plating			Tin (5 - 6 µm), matte
Housing Type			Plastic Case
Mounting Type			PCB Mount
Connection Type			THD (Through-Hole Device)
Footprint Type			SIP5
Soldering Profile			Lead-Free Wave Soldering 260°C / 6 s max.
Weight			2.1 g
Environmental Compliance	- REACH Declaration		www.tracopower.com/info/reach-declaration.pdf REACH SVHC list compliant REACH Annex XVII compliant
	- RoHS Declaration		www.tracopower.com/info/rohs-declaration.pdf Exemptions: 7a, 7c-I (RoHS exemptions refer to the component concentration only, not to the overall concentration in the product (O5A rule).)
	- SCIP Reference Number		a2f33c9f-48fb-4658-a064-e1a6a36640e6

Supporting Documents

Overview Link (for additional Documents)	www.tracopower.com/overview/trn1

All specifications valid at nominal voltage, resistive full load and +25°C after warm-up time, unless otherwise stated.

Outline Dimensions

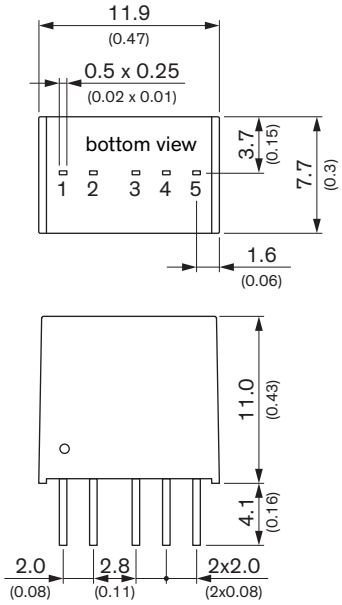

Dimensions in [mm], () = Inch
Tolerances: x.x ±0.5 (±0.02)
x.xx ±0.25 (±0.01)
Pin pitch tolerances ±0.25 (±0.01)
Pin dimension tolerance ±0.1 (±0.004)

Pinout		
Pin	**Single**	**Dual**
1	–Vin (GND)	–Vin (GND)
2	+Vin (Vcc)	+Vin (Vcc)
3	+Vout	+Vout
4	No pin	Common
5	–Vout	–Vout

© Copyright 2024 Traco Electronic AG