Unregulated DC/DC Converters

TSH Series, 2 Watt

not recommended for new design in

Features

- Ultra compact SMD package (SOIC-8/10)
- Isolated single and dual output models
- I/O isolation 1'000 VDC
- High efficiency up to 82%
- Operating temperature –40°C to +85°C
- Reflow solder temperature up to 245°C
- High accuracy of pin Co-planarity
- Available in tape and reel package
- Lead free design, RoHS compliant
- 3–year product warranty

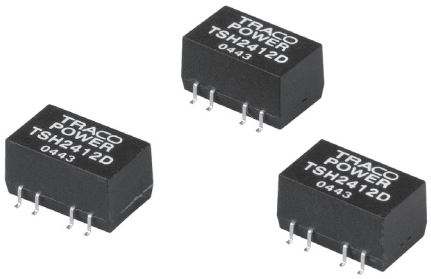

The TSH series are ultra miniature, isolated 2 Watt DC/DC-converters in SMD package. The devices can be soldered without any problems in a high temperature lead free solder process. Requiring only 1.5 cm² board space they offer the ideal solution in many space critical applications. These converters are the ideal solution for point of load power conversion, ground loop elimination, noise reduction and digital interface applications.

Models

Ordercode	Input voltage	Output voltage	Output current max.	Efficiency typ.
TSH 0505S	5 VDC ±10%	5 VDC	400 mA	77 %
TSH 0512S		12 VDC	165 mA	81 %
TSH 0505D		±5 VDC	±200 mA	77 %
TSH 0512D		±12 VDC	±80 mA	79 %
TSH 0515D		±15 VDC	±65 mA	79 %
TSH 1205S	12 VDC ±10%	5 VDC	400 mA	78 %
TSH 1212S		12 VDC	165 mA	82 %
TSH 1212D		±12 VDC	±80 mA	82 %
TSH 1215D		±15 VDC	±65 mA	82 %
TSH 2405S	24 VDC ±10%	5 VDC	400 mA	78 %
TSH 2412S		12 VDC	165 mA	81 %
TSH 2412D		±12 VDC	±80 mA	81 %
TSH 2415D		±15 VDC	±65 mA	82 %

Input Specifications

Input current no load / full load	5 Vin models:	**60 mA / 500 mA typ.**
	12 Vin models:	**30 mA / 200 mA typ.**
	24 Vin models:	**15 mA / 100 mA typ.**
Surge voltage (1 sec. max.)	5 Vin models:	**9 V max.**
	12 Vin models:	**18 V max.**
	24 Vin models:	**30 V max.**
Reflected input ripple current		**can be reduced by ext. 1–3.3 µF polyester film capacitor**
Input filter		**internal capacitors**

Output Specifications

Voltage set accuracy		**±4 % max.**
Voltage balance (dual output models)		**1 % max.**
Regulation	– Input variation	**1.2 % / 1% change Vin**
(Unregulated)	– Load variation 20 – 100 %	**10 % max.**
Ripple and noise (20 MHz Bandwidth)		**75 mV pk-pk max.**
Temperature coefficient		**± 0.02 %/K**
Short circuit protection		**limited 1 sec. max.**
Capacitive load	5 VDC single output models:	**47 µF max.**
	5 VDC dual output model:	**10 µF max.**
	12 VDC single output models:	**10 µF max.**
	12/15 VDC dual output models:	**4.7 µF max.**

General Specifications

Temperature ranges	– Operating	**–40°C to +85°C** (no derating)
	– Case temperature	**+105°C max.**
	– Storage	**–55°C to +125°C**
Humidity (non condensing)		**95 % rel H max.**
Reliability, calculated MTTF (MIL-HDBK-217F, @+25°C, ground benign)		**>2'000'000 h**
Isolation voltage (60 sec.)	– Input/Output	**1'000 VDC**
Isolation capacitance	– Input/Output	**60 pF typ.**
Isolation resistance	– Input/Output	**>1'000 Mohm** (at 500VDC)
Switching frequency		**100 kHz typ.** (frequency modulation)
Frequency change over line and load		**±30 % max.**

Physical Specifications

Casing material		**non conductive black plastic** (UL 94-V0 rated)
Package weight	single output models:	**1.5 g** (0.08 oz)
	dual output models:	**2.2 g** (0.05 oz)
Lead-free reflow solder process		**as per IPC/JEDEC J-STD-020C peak temp. 245°C** (20 sec. max.)

All specifications valid at nominal input voltage, full load and +25°C after warm-up time unless otherwise stated.

Outline Dimensions

Single Output Models

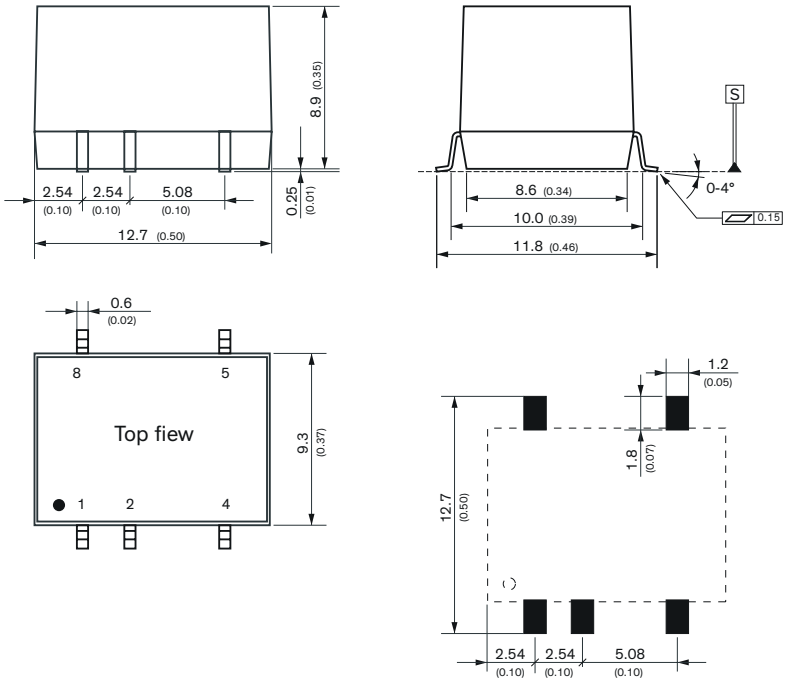

Pin-Out	
Pin	**Single**
1	–Vin (GND)
2	+Vin (Vcc)
4	–Vout
5	+Vout
8	Ntc.

Ntc. = not to connect

Dual Output Models

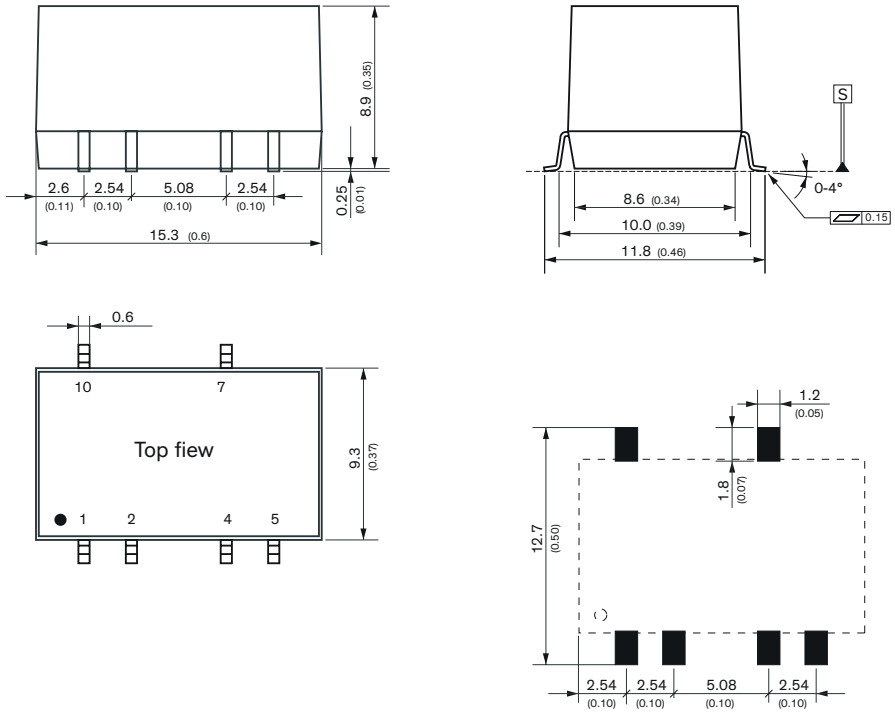

Pin-Out	
Pin	**Dual**
1	–Vin (GND)
2	+Vin (Vcc)
4	Common
5	–Vout
7	+Vout
10	Ntc.

Ntc. = not to connect

Dimensions in [mm], () = Inches

Tolerances ±0.25 (±0.01), pins ±0.05 (±0.002)

Packaging: Single Output Models

Standard Packaging - Tube

- 1 Tube contains 10 converters

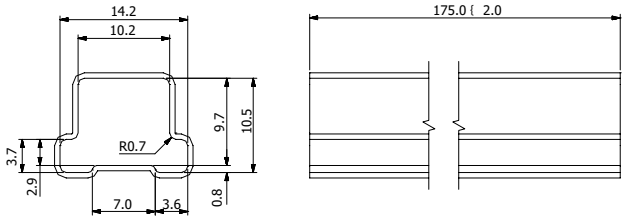

Optional Packaging - Tape & Reel

- Specifications according IEC 286-3
- 1 Reel contains 300 Converters
- Use appendix «-TR» on order code

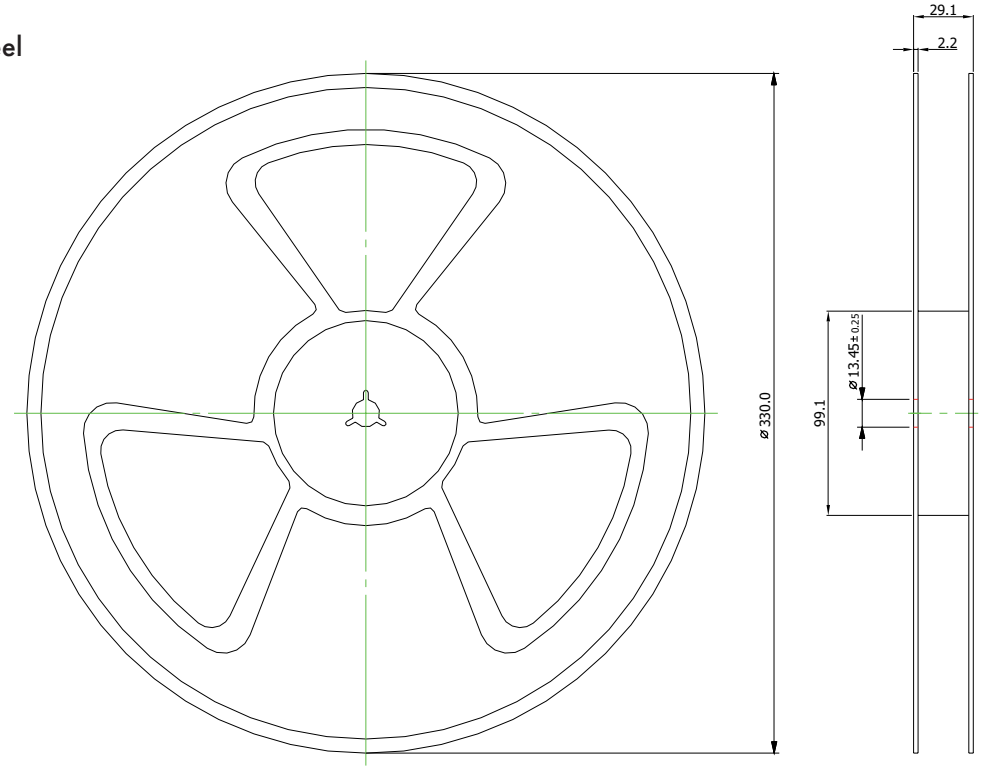

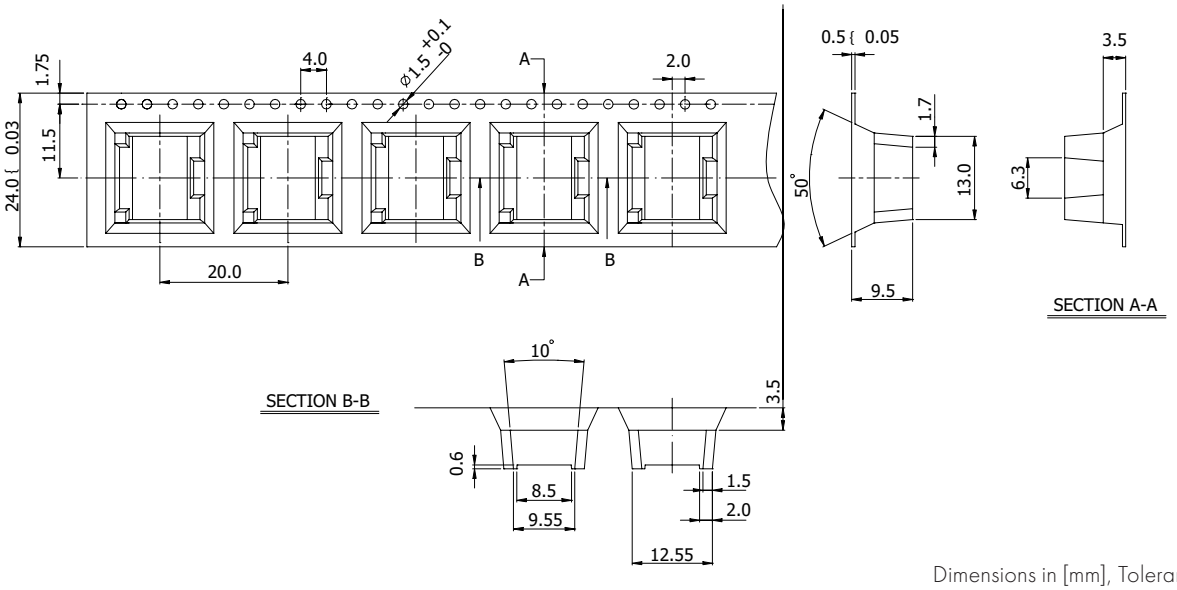

Dimensions in [mm], Tolerance ±0.1mm

Packaging: Dual Output Models

Standard Packaging - Tube

1 Tube contains 10 Converters

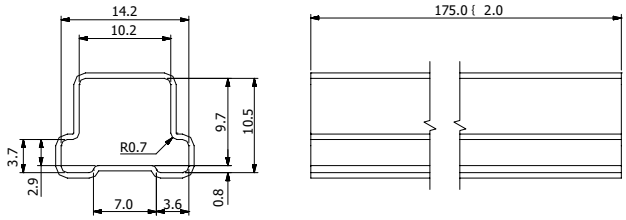

Optional Packaging - Tape & Reel

- Specifications according IEC 286-3
- 1 Reel contains 300 Converters
- Use appendix «-TR» on order code

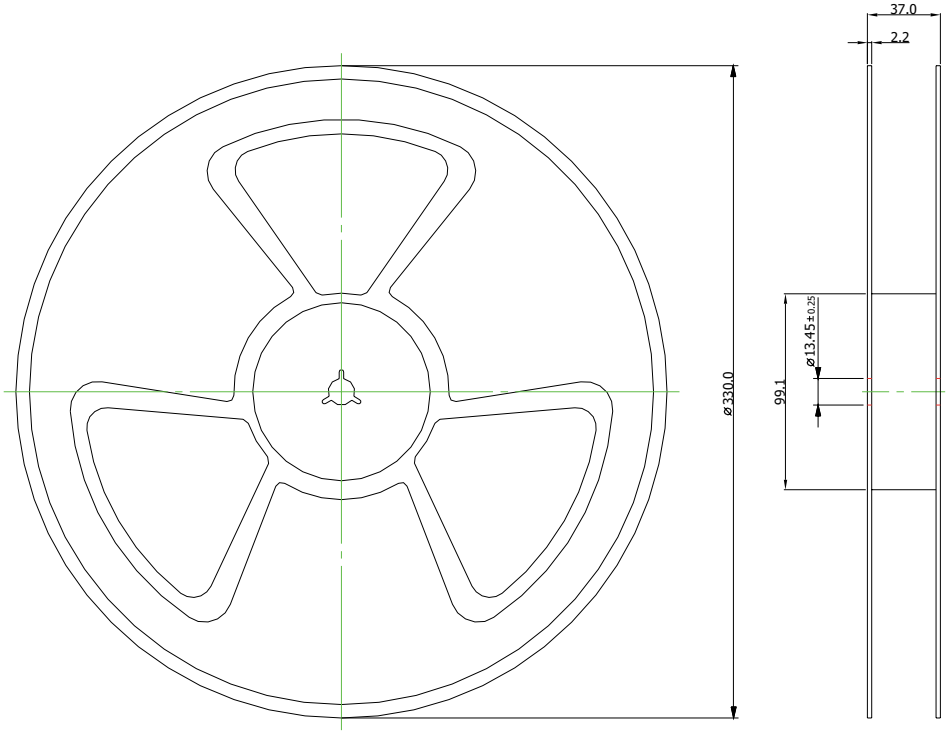

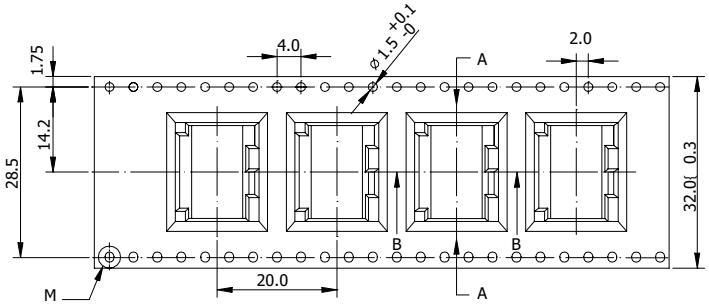

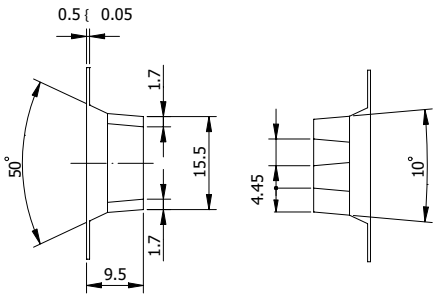

SECTION A-A

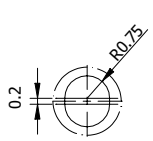

M: partial enlargement

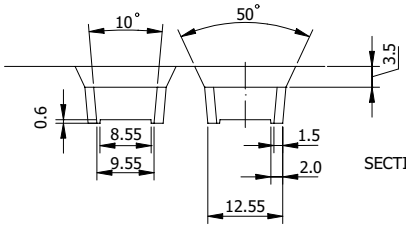

SECTION B-B

Specifications can be changed any time without notice.

Dimensions in [mm], Tolerance ±0.1mm