Unregulated DC/DC Converters

TSV Series, 1 Watt

Features

- **SMD package (SOIC-12)**
- **Isolated single and dual output models**
- **I/O isolation 3'000 VDC**
- **High efficiency up to 81 %**
- **Extended temperature range –40°C to +85°C**
- **High accuracy of pin co-planarity**
- **Available in tape and reel package**
- **Lead free design, RoHS compliant**
- **3-year product warranty**

not recommended for new design in

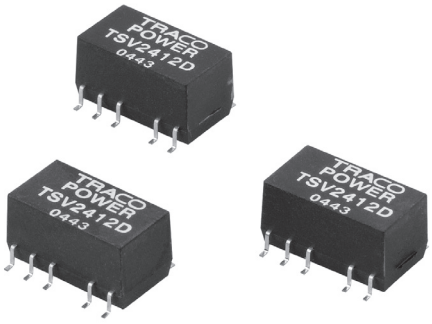

The TSV series are miniature, 1W DC/DC-converters with high isolation in a SMD package. The devices can be soldered without any problems in a high temperature lead free solder process. With the small footprint, these converters are the ideal solution for board level power distribution, mainly for applications in the industrial- and telecom field.

Models

Ordercode	Input voltage	Output voltage	Output current max.	Efficiency typ.
TSV 0505S	**5 VDC ±10 %** (Nominal 5 VDC)	5 VDC	200 mA	71 %
TSV 0512S		12 VDC	80 mA	78 %
TSV 0515S		15 VDC	65 mA	78 %
TSV 0505D		±5 VDC	±100 mA	72 %
TSV 0512D		±12 VDC	±40 mA	78 %
TSV 0515D		±15 VDC	±30 mA	79 %
TSV 1205S	**12 VDC ±10 %** (Nominal 12 VDC)	5 VDC	200 mA	71 %
TSV 1212S		12 VDC	80 mA	79 %
TSV 1215S		15 VDC	65 mA	80 %
TSV 1205D		±5 VDC	±100 mA	74 %
TSV 1212D		±12 VDC	±40 mA	80 %
TSV 1215D		±15 VDC	±30 mA	81 %
TSV 2405S	**24 VDC ±10 %** (Nominal 24 VDC)	5 VDC	200 mA	71 %
TSV 2412S		12 VDC	80 mA	78 %
TSV 2415S		15 VDC	65 mA	79 %
TSV 2405D		±5 VDC	±100 mA	72 %
TSV 2412D		±12 VDC	±40 mA	79 %
TSV 2415D		±15 VDC	±30 mA	80 %

Input Specifications

Input current no load / full load	5 Vin models:	30 mA / 260 mA typ.
	12 Vin models:	12 mA / 110 mA typ.
	24 Vin models:	7 mA / 55 mA typ.
Surge voltage (1 sec. max.)	5 Vin models:	9 V max.
	12 Vin models:	18 V max.
	24 Vin models:	30 V max.
Reflected input ripple current*		can be reduced by ext. 1–3.3 µF polyester film capacitor
Input filter		internal capacitor

Output Specifications

Voltage set accuracy		±4 % max.
Voltage balance (dual output models, balanced load)		1 % max.
Regulation	– Input variation	1.2 % / 1% change Vin
(Unregulated)	– Load variation 20 – 100 %	10 % max.
Ripple and noise (20 MHz Bandwidth)		75 mV pk-pk max.
Temperature coefficient		±0.02 %/K
Short circuit protection		limited 0.5 sec. max.
Capacitive load	5 VDC single output models:	33 µF max.
	5 VDC dual output model:	10 µF max.
	12/15 VDC single output models:	4.7 µF max.
	12/15 VDC dual output models:	2.2 µF max.

General Specifications

Temperature ranges	– Operating	–40°C to +85°C (no derating)
	– Case temperature	+105°C max.
	– Storage	–40°C to +105°C
Humidity (non condensing)		95 % rel H max.
Reliability, calculated MTTF (MIL-HDBK-217F, @ +25°C, ground benign)		>2'000'000 h
Isolation voltage (Input/Output, 60 sec.)		3'000 VDC
Isolation capacitance (Input/Output)		60 pF typ.
Isolation resistance (Input/Output)		>10'000 M Ohm (500VDC)
Switching frequency		100 kHz typ. (frequency modulation)
Frequency change over line and load		±30 % max.

Physical Specifications

Casing material	non conductive FR4 (UL 94V-0 rated)
Package weight	2.2 g (0.07 oz)
Reflow soldering profile	peak temp. 245°C (10 sec. max.) 217°C for 90 sec. max. Convection reflow solder process is recommended
Packaging information	www.tracopower.com/overview/tsv

All specifications valid at nominal input voltage, full load and +25°C after warm-up time unless otherwise stated.

Derating all Models

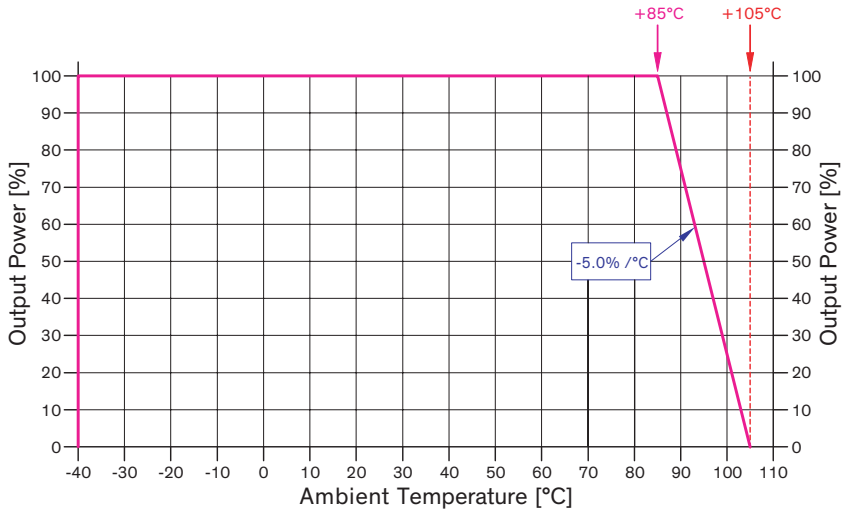

Outline Dimensions

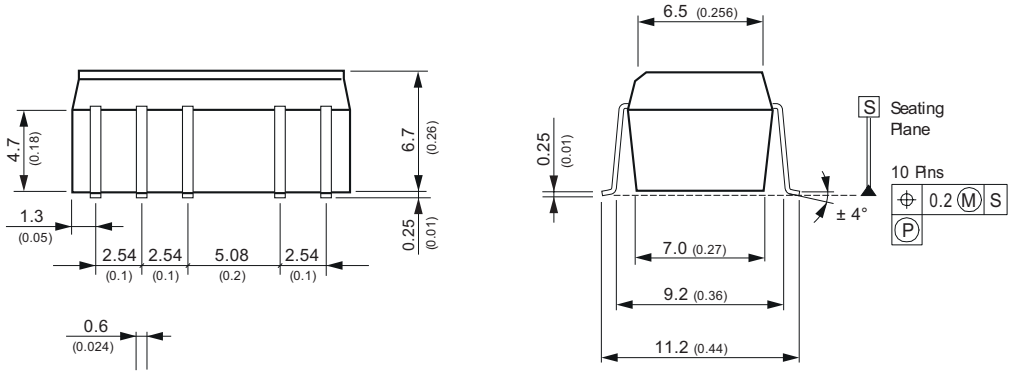

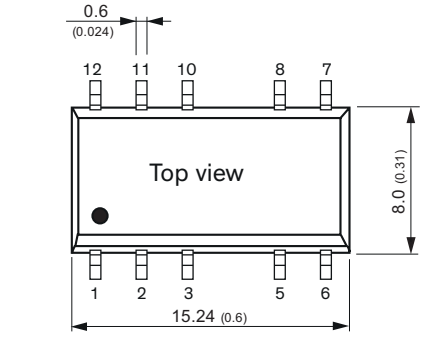

Solder pad

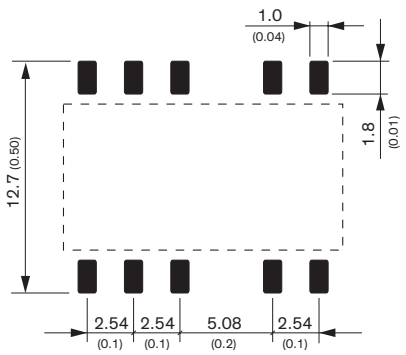

Pin-Out		
Pin	**Single**	**Dual**
1	–Vin (GND)	–Vin (GND)
2	+Vin (Vcc)	+Vin (Vcc)
3	ntc	ntc
5	–Vout	Common
6	ntc	–Vout
7	ntc	ntc
8	+Vout	+Vout
10	ntc	ntc
11	ntc	ntc
12	ntc	ntc

(ntc = not to connect)

Dimensions in [mm], () = Inch
Pin diameter: 1.0 ±0.05 (0.02 ±0.002)
Pin pitch tolerances: ±0.13 (±0.005)
Case tolerances: ±0.25 (±0.01)