DC/DC Converter

TYL/TVL Series 1.5-5 Watt

Features

- Ultra low Ripple and Noise
- Full SMD-Design with Ceramic Capacitores
- Tightly regulated Outputs
- High Output Stability
- Short Circuit Protection
- Shielded Metal Case
- Single- and Dual Output Models
- 2 Year Product Warranty



The TYL and TVL Series are DC/DC-Converter with very low output ripple and noise specification. These DC/DC-Converter are an ideal solution for noise sensitive applications as analoge circuits, audio applications, reference voltages or mesuring systems. SMD-technology and a 100 % production test ensure a very high reliability of these products.

Models

Ordercode	Input voltage range	Output 1	Output 2	Ripple and noise max.
TYL 05-05S30	4.75 – 6 VDC	5 VDC / 300 mA		6 mVpk-pk
TYL 05-12S12		12 VDC / 120 mA		6 mVpk-pk
TYL 05-15S10		15 VDC / 100 mA		6 mVpk-pk
TYL 05-05W08		+ 5 VDC / 80 mA	– 5 VDC / 80 mA	6 mVpk-pk
TYL 05-12W06		+12 VDC / 65 mA	–12 VDC / 65 mA	6 mVpk-pk
TYL 05-15W05		+15 VDC / 53 mA	–15 VDC / 53 mA	6 mVpk-pk
TVL 05-1220	4.75 – 6 VDC	+12 VDC / 200 mA	–12 VDC / 200 mA	3 mVpk-pk
TVL 05-1225		+12 VDC / 250 mA	–12 VDC / 125 mA	3 mVpk-pk
TVL 05-1516		+15 VDC / 165 mA	–15 VDC / 165 mA	3 mVpk-pk
TVL 05-1520		+15 VDC / 200 mA	–15 VDC / 100 mA	3 mVpk-pk

Input Specifications

Input current (no load)		TYL models TVL models	< 95 mA < 170 mA
Input current (full load)		TYL models TVL models	500 mA typ. 1'600 mA typ.

Otput Specifications

Voltage set accuracy			± 3 %
Regulation	– Input variation Vin min. to Vin max.	TYL models: TVL models:	± 0.3 % max. ± 0.03 % max.
	– Load variation 0 – 100 %	TYL models: TVL models:	± 0.3 % max. ± 0.18 % max.
Ripple and noise (20 MHz Bandwidth)		TYL models: TVL models:	6 mVpk-pk max. 3 mVpk-pk max.
Temperature coefficient			± 0.02 % / °C
Output current limitation			>120 % of Iout max.
Short circuit protection			indefinite (automatic rcovery)

General Specifications

Temperature ranges	– Operating – Storage		– 25°C ... +71°C – 45°C ... +85°C
Derating			3%/°C above 50°C
Efficiency			60% (TVL 05-05W08: 45%)
Humidity (non condensing)			30 – 95 % rel H max.
Reliability, calculated MTBF (MIL-HDBK-217 F)			>1'000'000h @ + 25 °C
Isolation voltage	Input / Output		500 VDC
Isolation capacity	Input / Output		100 pF
Isolation resistance	Input / Output (500 VDC)		> 10 M Ohm
Switching frequency		TYL models: TVL models:	70 – 400 kHz depending on load 50 – 300 kHz depending on load
Vibration			5 to 10 Hz amplitude 10 mm pk-pk 10 to 55 Hz acceleration 2 G
Shock			acceleration 20 G max. time 11 ms

All specifications valid at nominal input voltage, full load and +25°C after warm-up time unless otherwise stated.

Physical Specifications

Case material		Steel chrome-nickel plated
Potting material		Silicon rubber TSE (flammability to UL94V-0)
Weight	TYL models: TVL models:	14 g (0.49 oz) 31 g (1.09 oz)
Soldering temperature		max. 260 °C / 10 sec.

Application

Ripple an noise reduction to <2mVpk-pk

Use external capacitores to reduce ripple an noise

Single output models:

	TVL	TYL
C1:	47 µF/10V	10 µF/10V
C2:	1 µF/16V	1 µF/16V
C3:	470 nF	470 nF

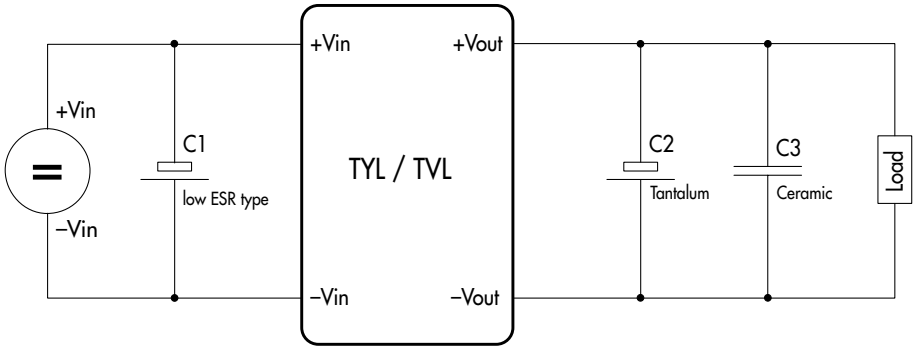

Dual output models:

	TVL	TYL
C1:	47 µF/10V	10 µF/10V
C2+C3:	2.2 µF/16V	1 µF/16V
C4+C5:	470 nF	470 nF

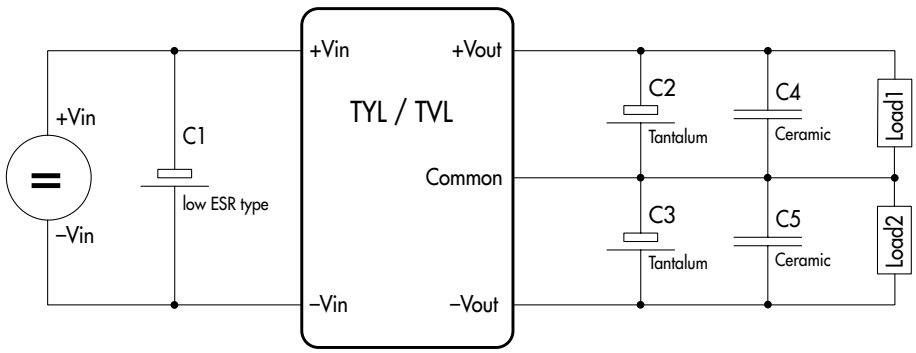

All specifications valid at nominal input voltage, full load and +25°C after warm-up time unless otherwise stated.

Outline Dimensions mm (inches)

TYL

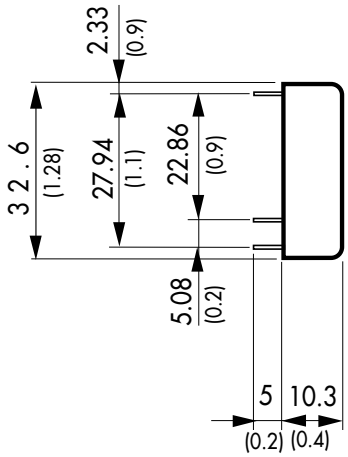

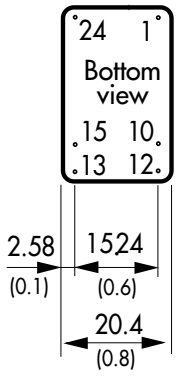

TYL Pin-Out		
Pin	**Single**	**Dual**
1	–Vin (GND)	–Vin (GND)
10	–Vout	–Vout
12	–Vout	Common
13	+Vout	Common
15	+Vout	+Vout
24	+Vin (Vcc)	+Vin (Vcc)

TVL

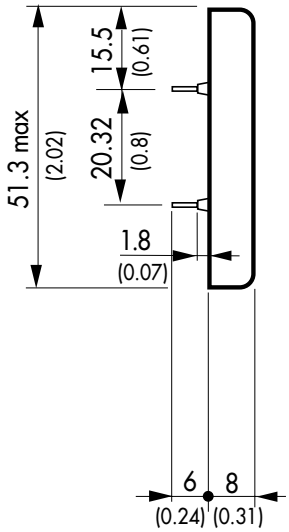

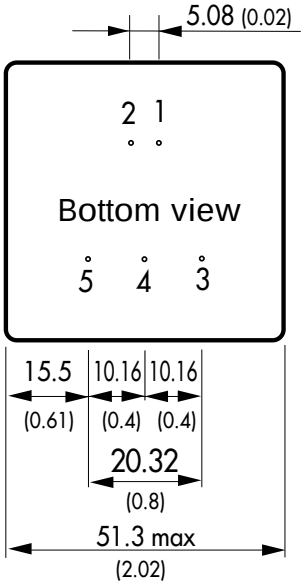

TVL Pin-Out	
Pin	**Dual output**
1	+Vin (Vcc)
2	–Vin (GND)
3	+Vout
4	Common
5	–Vout

Pin diameter ø 0.6 ±0.05 (0.023 ±0.002)

Tolerances ±0.5 (0.02)

Specifications can be changed without notice

TRACO ELECTRONIC AG
Jenatschstrasse 1 • CH-8002 Zurich • Switzerland
Tel. +41-1284 2911 • Fax +41-1201 1168 • e-mail: sales@traco.ch • internet: http://www.tracopower.com