TRIAD MAGNETICS

CLASS 2/3 TRANSFORMER

F16-400-C2



Description:

The F16-400-C2 is a single primary and dual secondary, split bobbin design which operates with an input of 115V. The secondaries are 8V @ 0.4A each. They can be used independently (up to 300V difference between them) or in series for double the voltage or in parallel for double the current. The split bobbin design eliminates the need for costly electrostatic shielding.

Electrical Specifications (@25C)

1. Maximum Power: 6.0VA
2. Primary: 115V, 50/60 Hz
3. Secondaries: 8.0V @ 0.4A each
4. Voltage Regulation: 25% TYP @ full load to no load
5. Temperature Rise: 25C TYP
6. Hipot tested 100% at 4200 VRMS pri to sec
7. Hipot tested 100% at 2160 VRMS sec to sec
8. Recommended fuse (fuse on primary): Cooper/Bussman, Type MDL, rated 500mA, 250V

Construction:

Three flange bobbin construction with primaries and secondaries wound side by side for low capacitive coupling. UL Class F Insulation System (155°C).

Agency File:

UL: File E65390, UL 5085-1 & 3 (1585), Class 2 not wet / Class 3 wet Transformer
cUL: File E65390, UL 5085-1 & 3 (1585) For Canadian Use (CSA 22.2, No.66.3-06)

Dimensions:

Units in inches.

H	W	L	A	B	C	D	E	F
1.398 MAX	1.331 MAX	1.650 MAX	0.250±0.02	0.350±0.02	1.280±0.02	0.041	0.020	0.217±0.02

Weight: 0.44 lbs

Schematic:

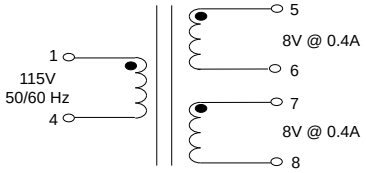

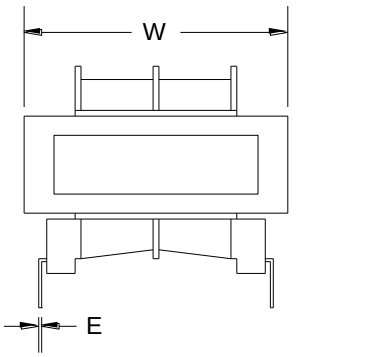

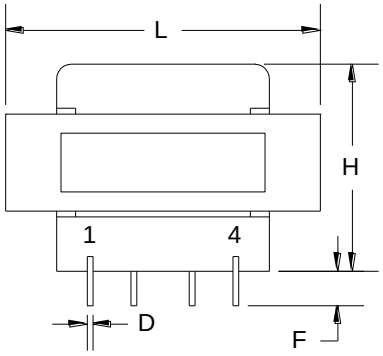

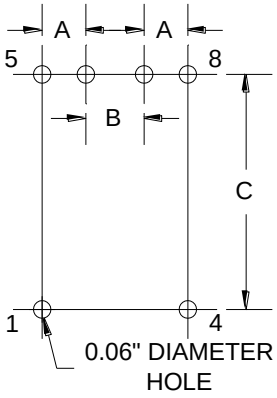

Board Layout

RoHS Compliance: As of manufacturing date February 2016, all standard products meet the requirements of 2015/863/EU, known as the RoHS 3 initiative.

Note: Order and shipping documentation may have a "-B" suffix; this indicates Bulk packaging but does not show on the actual part number marked on the transformer.

*Upon printing, this document is considered "uncontrolled". Please contact Triad Magnetics website for the most current version. For soldering and washing information please see http://www.triadmagnetics.com/faq.html

www.TriadMagnetics.com
Phone: (951) 277-0757
Fax: (951) 277-2757

460 Harley Knox Blvd.
Perris, CA 92571

Publish Date: April 18, 2019