Panel Potentiometer

Model P09x Series

TT Electronics PRO AUDIO

TT Electronics



Features:

- Multi-ganged—up to 6 gangs
- Excellent 100,000 cycles life
- Rotary and Momentary Switch options
- Push-lock options
- Concentric shaft option
- Center tap option
- PCB pins

RoHS compliant

Description:

9mm Rotary Potentiometer, with metal shaft and bushing. Options include audio and linear tapers; knurled, flatted and slotted shafts.

Applications:

- Audio / video equipment / Amplifiers / Mixers
- TV and multimedia sound systems / Portable electronics

Model Styles Available:

• Side Adjust, 1 to 6 gangs	P09xN
• Side Adjust, 1 to 4 gangs, w/Rotary switch	P09xS
• Side Adjust, 1 to 4 gangs, w/Momentary switch	P09xM
• Side Adjust, 1 gang, w/ Rotary and Momentary switches	P091B
• Top Adjust, 1 or 2 gangs	P09x5N
• Top Adjust, 1 gang w/Rotary switch	P0915S
• Side Adjust, with Push-Lock, 1 or 2 gangs	P09xP
• With Concentric shaft, 2 to 4 gangs	P09xC
• With Center Tap, 2 gangs only	P092T

Electrical Characteristics

T_A = 25°C unless otherwise noted

Resistance Range	1KΩ to 1MΩ
Standard Resistance Tolerance	± 20%
Residual Resistance	20 ohms max
Resistance Taper	Audio (10A, 15A, 15C), Linear (1B) - see note 3
Maximum Operating Voltage	50Vac
Rated Power	Linear Taper B: 0.05W Other Tapers: 0.025W
Dielectric Strength	300 Vac , 1 minute
Rotational Noise	100mV max
Insulation Resistance	>100M ohms at 250 Vdc
Gang Error (Multi-ganged)	-40dB to 0dB, ±3dB

General Note
TT Electronics reserves the right to make changes in product specification without notice or liability. All information is subject to TT Electronics' own data and is considered accurate at time of going to print.

© TT electronics plc

TT Electronics | BI Technologies
413 Rood Rd, Suite 7
Calexico, CA 92231
Ph: + 1 (714) 447-2345
www.ttelectronics.com

Rotary Switch Characteristics

T_A = 25°C unless otherwise noted

Switch Circuit	SPST
Contact Resistance	<100mohms
Rated Power	3.0A at 16Vdc
Switch Torque	100-350 gf.cm
Switch Rotational Angle	50° Max.
Switch Life	15,000 cycles min.

Momentary Switch Characteristics

T_A = 25°C unless otherwise noted

Switch Circuit	SPST
Contact Resistance	<100mohms
Rated Power	0.5A at 12Vdc
Switch Torque	250-550 gf.cm
Switch Push Stroke Length	0.5 +0.5/-0.3 mm
Switch Life	15,000 cycles min.

Mechanical Characteristics

T_A = 25°C unless otherwise noted

Mechanical Travel (Rotational angle)	300° ± 10°
Rotational Torque	35 to 90 gf.cm
Rotational Stop Strength, Minimum	3.0kgf.cm
Shaft Pull Strength, Minimum	6.0 kgf
Detent Torque	50 to 200 gf.cm
Nut Tightening Strength, Minimum	8.0 kgf
Rotational Life	100,000 cycles

Environmental Characteristics

T_A = 25°C unless otherwise noted

Operating Temperature	-10°C to 70°C
IP Rating	IP50
Soldering Condition	Compatible with Industry standard soldering processes: Manual: SAC 270 °C max. for 3 seconds. Wave: SAC 260 °C max. for 5 seconds.
RoHS	Please refer to TT Electronics Website
REACH	Please refer to TT Electronics Website

General Note
TT Electronics reserves the right to make changes in product specification without notice or liability. All information is subject to TT Electronics' own data and is considered accurate at time of going to print.

© TT electronics plc

TT Electronics | BI Technologies
413 Rood Rd, Suite 7
Calexico, CA 92231
Ph: + 1 (714) 447-2345
www.ttelectronics.com

Panel Potentiometer

Model P09x Series

Ordering Information

P09	1		N	-		E	A	20	B	R	10K

Part Family
9mm Rotary

Number of Gangs
x = x gangs
1 = single gang
to
6 = 6 gangs (maximum)

Model Style
Omit = Side Adjust
5 = Top Adjust (1 - 2 gang)

Switch type
N = No switch
S = Rotary switch
M = Momentary switch
B = Rotary & Momentary switch (1 gang only)
P = Push-Lock (1 - 2 gang)
C = Concentric Shaft (2 - 4 gang)
T = Center Tap (2 gang only)

Number of Detents
Omit = No detent
1 = Center only
2 = 11
3 = 21
4 = 41

Shaft Type
E = Slotted
F = Flatted
Q = Split knurled

Total Resistance
See Resistance table below

Resistance Taper
A = Audio (15A)
B = Linear (1B)
C = Rev. Audio (15C)
D = Audio (10A)
(see Note 2)

Shaft Length - L
10 = 10mm
15 = 15mm
17 = 17.5mm
20 = 20mm
25 = 25mm
30 = 30mm
35 = 35mm
(See Outline Drawings)

Full CCW Position
A = 300°
B = 120°
C = 30°
D = 210°
(see Note 1)

Resistance table										
Resistance (Ohms)	1,000	2,000	5,000	10,000	20,000	50,000	100,000	200,000	500,000	1,000,000
Code	1K	2K	5K	10K	20K	50K	100K	200K	500K	1MEG

General Note
TT Electronics reserves the right to make changes in product specification without notice or liability. All information is subject to TT Electronics' own data and is considered accurate at time of going to print.

© TT electronics plc

TT Electronics | BI Technologies
413 Rood Rd, Suite 7
Calexico, CA 92231
Ph: + 1 (714) 447-2345
www.ttelectronics.com

Note 1: Shaft Position

Models: P09xN, P09xS, P09xM, P091B, P09x5N, P0915S, P09xP, P09xT

F Shaft Type

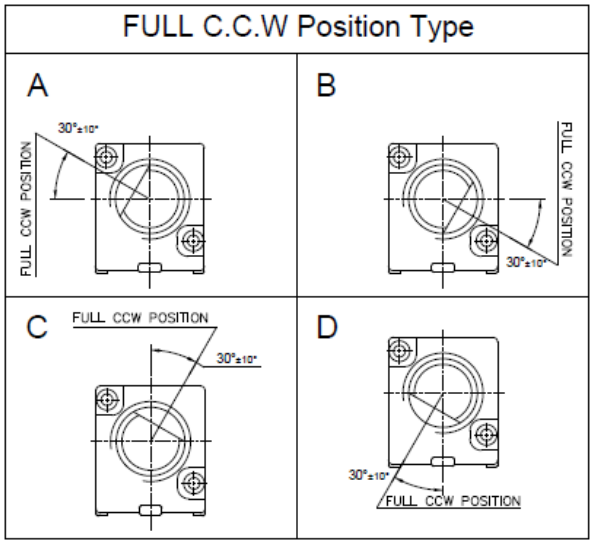

E /Q Shaft Type

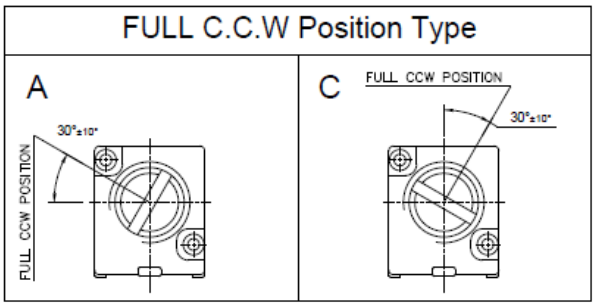

Models: P09xC

F Shaft Type

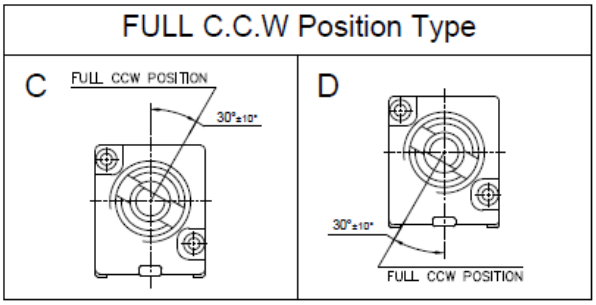

E /Q Shaft Type

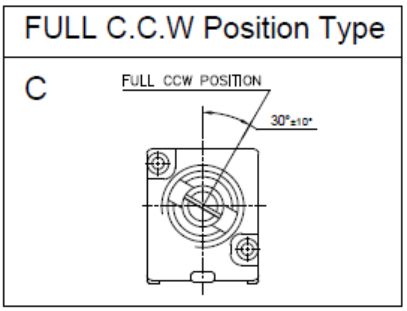

General Note
TT Electronics reserves the right to make changes in product specification without notice or liability. All information is subject to TT Electronics' own data and is considered accurate at time of going to print.

© TT electronics plc

TT Electronics | BI Technologies
413 Rood Rd, Suite 7
Calexico, CA 92231
Ph: + 1 (714) 447-2345
www.ttelectronics.com

Panel Potentiometer

Model P09x Series

Outline Drawings

Model P09xN (Side Adjust, PCB pins, up to 6 gangs)

X = Number of Gangs

X	1	2	3	4	5	6
H	7.05	9.55	14.55	17.05	22.05	24.55

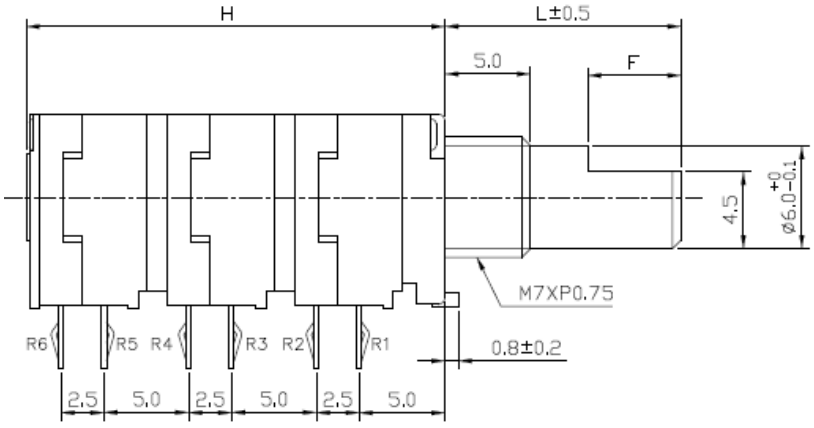

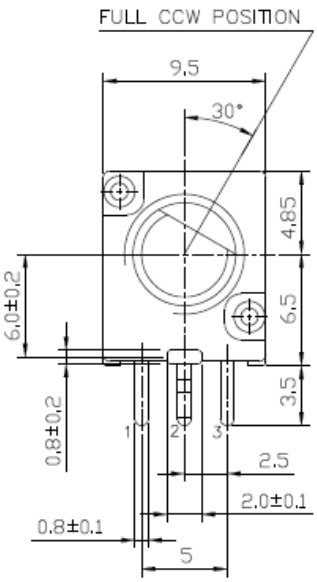

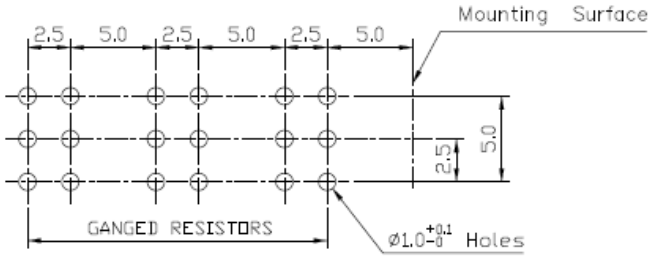

PCB LAYOUT

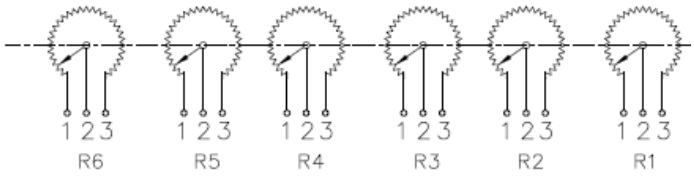

CIRCUIT DIAGRAM

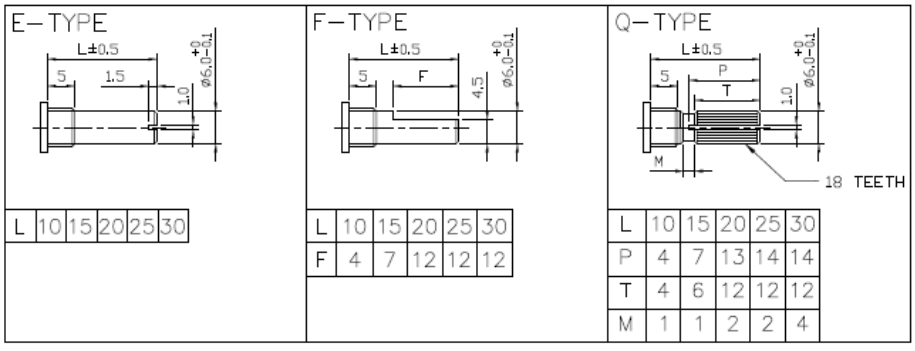

L	10	15	20	25	30

L	10	15	20	25	30
F	4	7	12	12	12

L	10	15	20	25	30
P	4	7	13	14	14
T	4	6	12	12	12
M	1	1	2	2	4

General Note
TT Electronics reserves the right to make changes in product specification without notice or liability. All information is subject to TT Electronics' own data and is considered accurate at time of going to print.

© TT electronics plc

TT Electronics | BI Technologies
413 Rood Rd, Suite 7
Calexico, CA 92231
Ph: + 1 (714) 447-2345
www.ttelectronics.com

Panel Potentiometer

Model P09x Series

Outline Drawings

Model P09xS (Side Adjust, PCB pins, up to 4 gangs with Rotary Switch)

X = Number of Gangs + 1 Switch

X	1	2	3	4
H	13.3	15.8	20.8	23.3

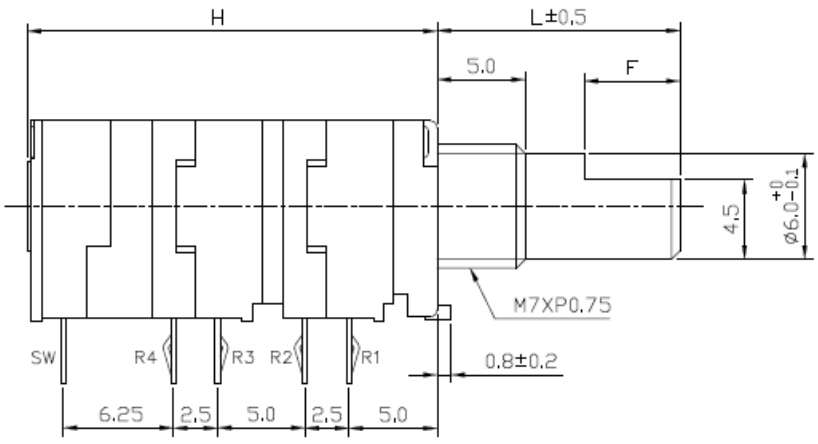

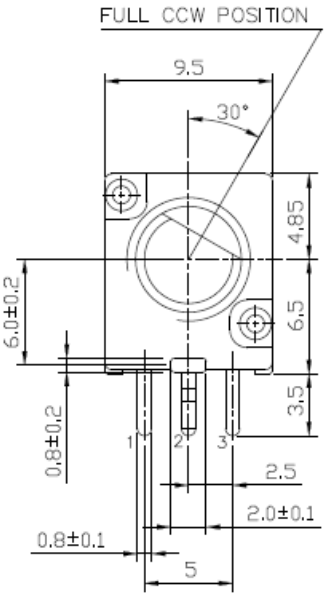

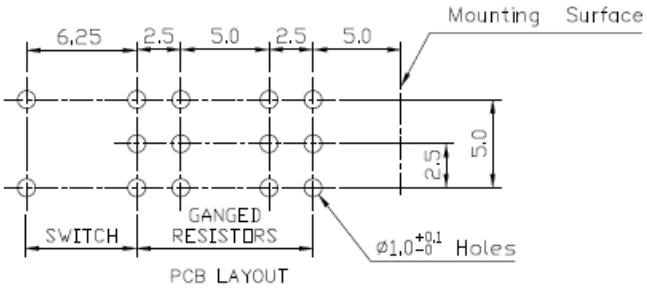

PCB LAYOUT

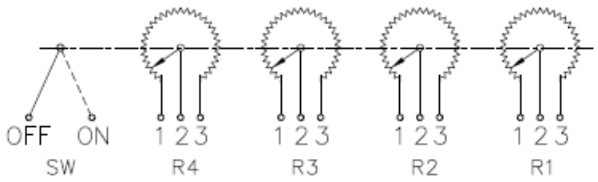

CIRCUIT DIAGRAM

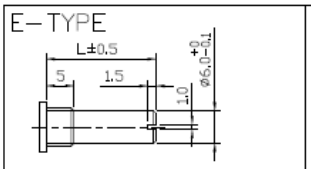

L	10	15	20	25	30

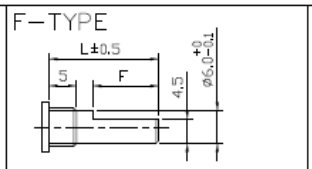

L	10	15	20	25	30
F	4	7	12	12	12

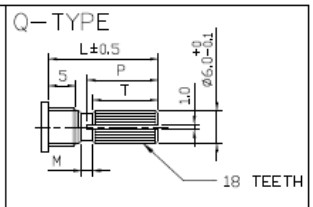

L	10	15	20	25	30
P	4	7	13	14	14
T	4	6	12	12	12
M	1	1	2	2	4

General Note
TT Electronics reserves the right to make changes in product specification without notice or liability. All information is subject to TT Electronics' own data and is considered accurate at time of going to print.

© TT electronics plc

TT Electronics | BI Technologies
413 Rood Rd, Suite 7
Calexico, CA 92231
Ph: + 1 (714) 447-2345
www.ttelectronics.com

Panel Potentiometer

Model P09x Series

Outline Drawings

Model P09xM (Side Adjust, PCB pins, up to 4 gangs with Momentary Switch)

X = Number of Gangs + 1 Switch

X	1	2	3	4
H	13.3	15.8	20.8	23.3

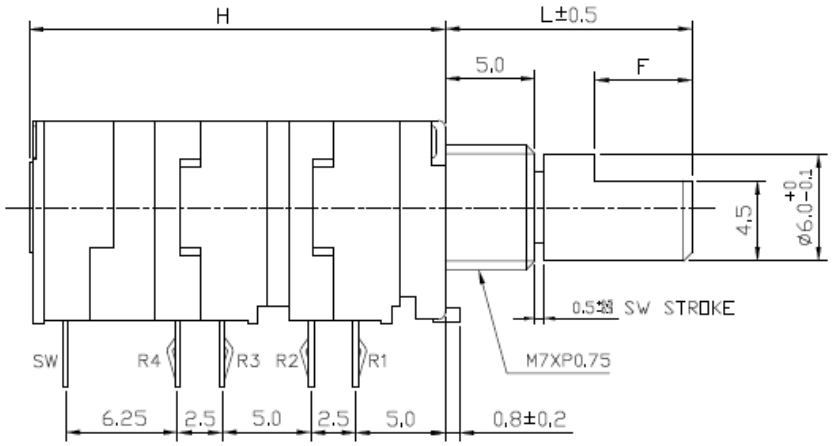

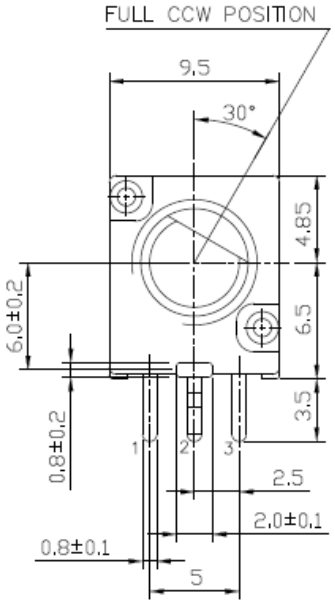

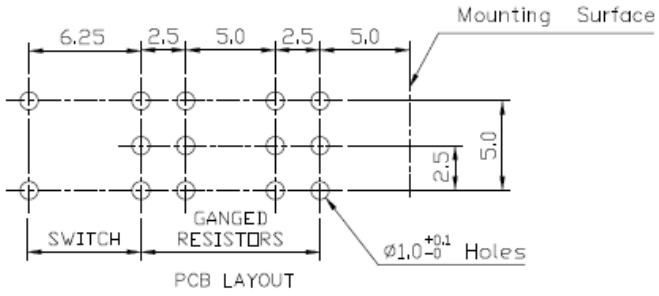

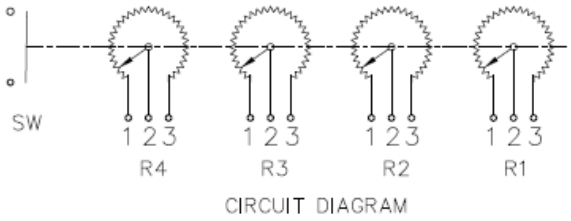

CIRCUIT DIAGRAM

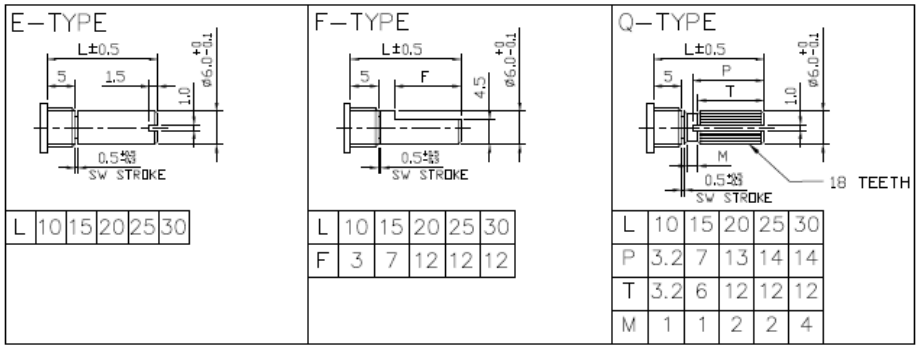

L	10	15	20	25	30

L	10	15	20	25	30
F	3	7	12	12	12

L	10	15	20	25	30
P	3.2	7	13	14	14
T	3.2	6	12	12	12
M	1	1	2	2	4

General Note
TT Electronics reserves the right to make changes in product specification without notice or liability. All information is subject to TT Electronics' own data and is considered accurate at time of going to print.

© TT electronics plc

TT Electronics | BI Technologies
413 Rood Rd, Suite 7
Calexico, CA 92231
Ph: + 1 (714) 447-2345
www.ttelectronics.com

Panel Potentiometer

Model P09x Series

Outline Drawings

Model P0915N (Top Adjust, PCB pins, 1 gang)

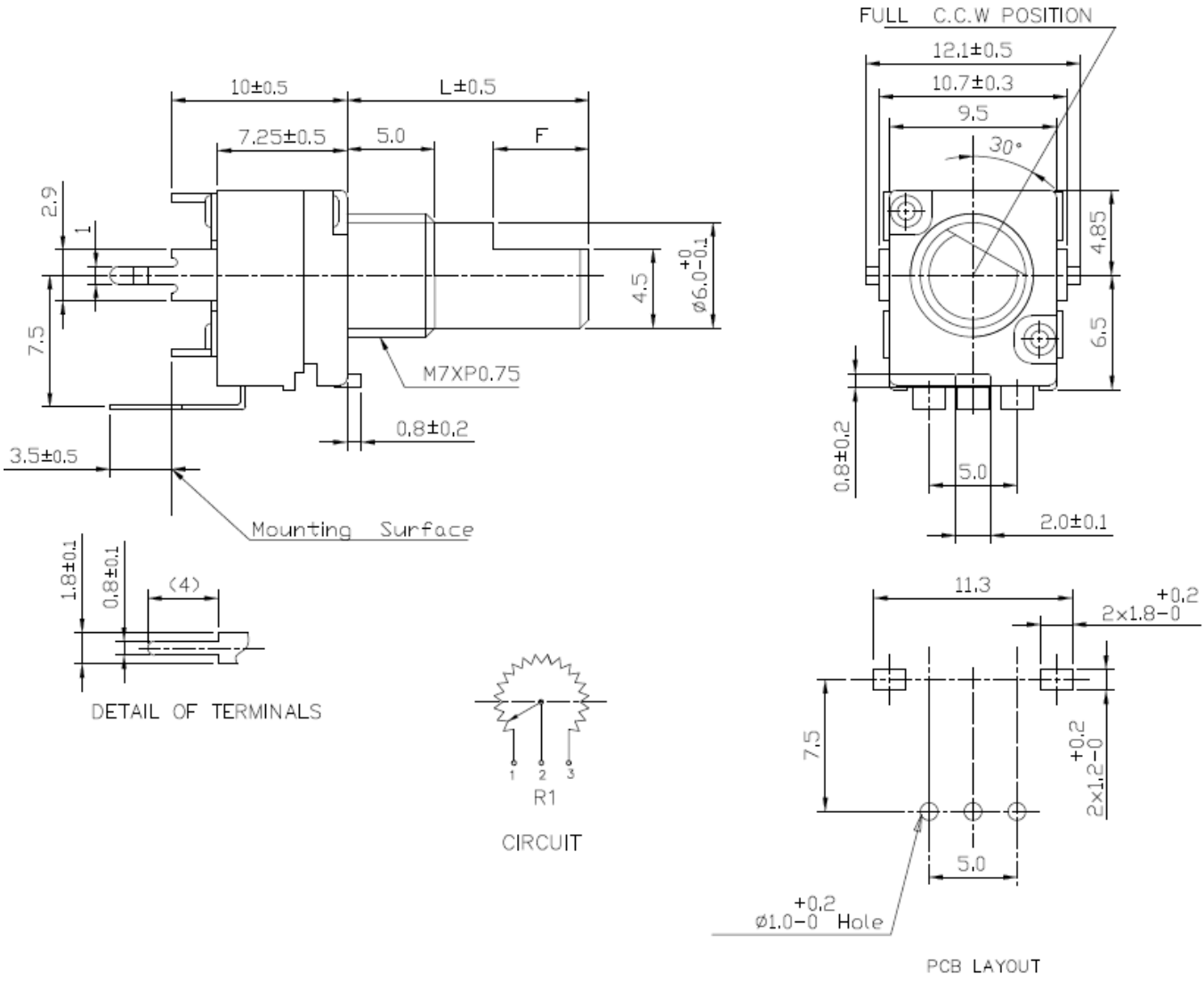

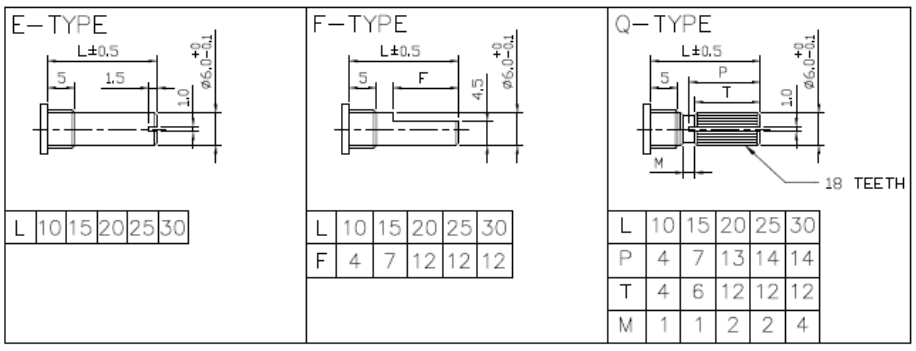

L	10	15	20	25	30

L	10	15	20	25	30
F	4	7	12	12	12

L	10	15	20	25	30
P	4	7	13	14	14
T	4	6	12	12	12
M	1	1	2	2	4

General Note
TT Electronics reserves the right to make changes in product specification without notice or liability. All information is subject to TT Electronics' own data and is considered accurate at time of going to print.

© TT electronics plc

TT Electronics | BI Technologies
413 Rood Rd, Suite 7
Calexico, CA 92231
Ph: + 1 (714) 447-2345
www.ttelectronics.com

Panel Potentiometer

Model P09x Series

Outline Drawings

Model P0925N (Top Adjust, PCB pins, 2 gangs)

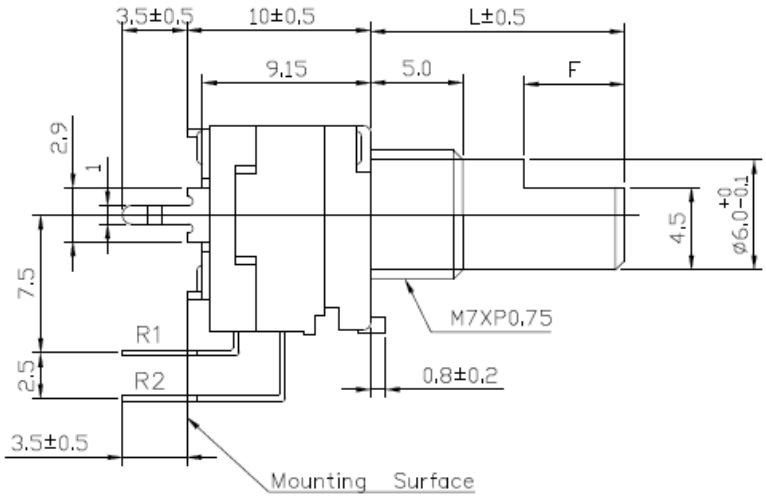

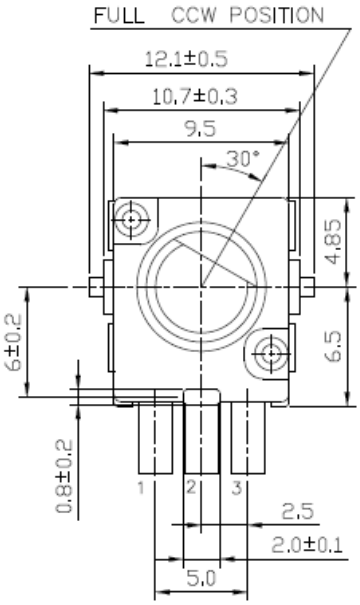

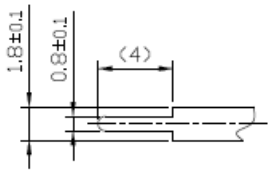

DETAIL OF TERMINALS

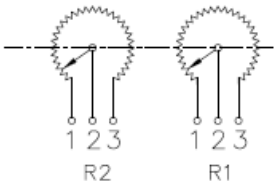

CIRCUIT DIAGRAM

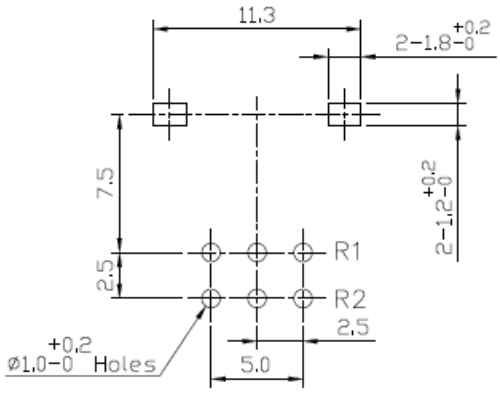

PCB LAYOUT

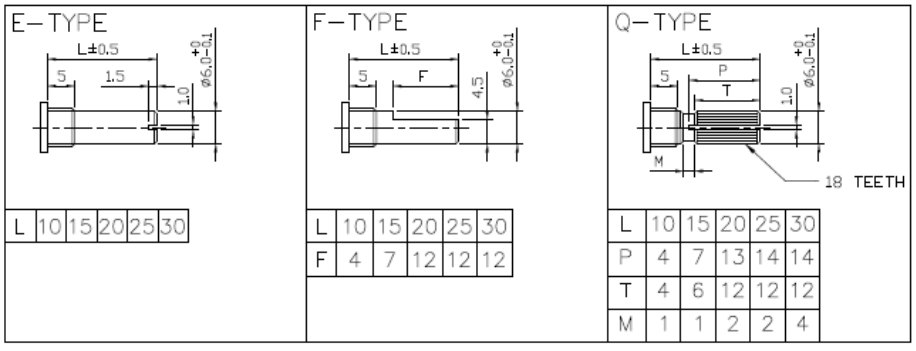

L	10	15	20	25	30

L	10	15	20	25	30
F	4	7	12	12	12

L	10	15	20	25	30
P	4	7	13	14	14
T	4	6	12	12	12
M	1	1	2	2	4

General Note
TT Electronics reserves the right to make changes in product specification without notice or liability. All information is subject to TT Electronics' own data and is considered accurate at time of going to print.

© TT electronics plc

TT Electronics | BI Technologies
413 Rood Rd, Suite 7
Calexico, CA 92231
Ph: + 1 (714) 447-2345
www.ttelectronics.com

Panel Potentiometer

Model P09x Series

Outline Drawings

Model P0915S (Top Adjust, PCB pins, with Rotary Switch, 1 gang only)

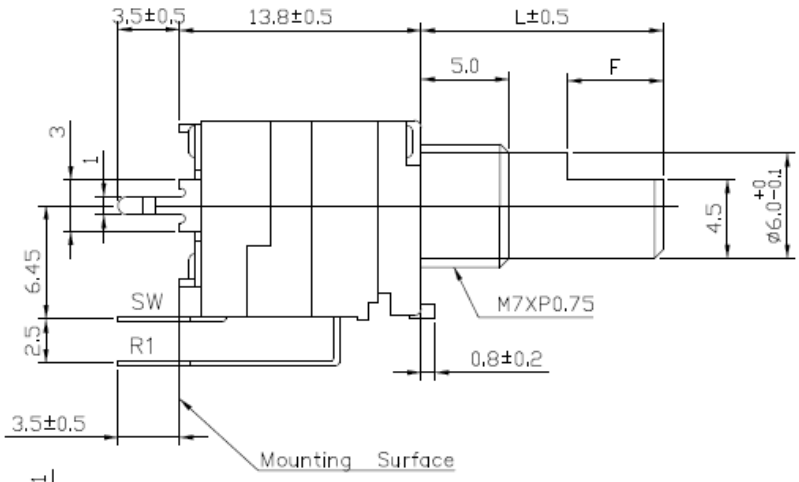

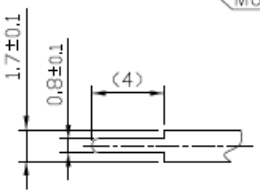

DETAIL OF TERMINALS

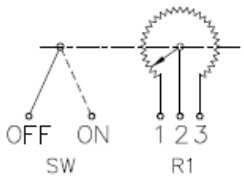

CIRCUIT DIAGRAM

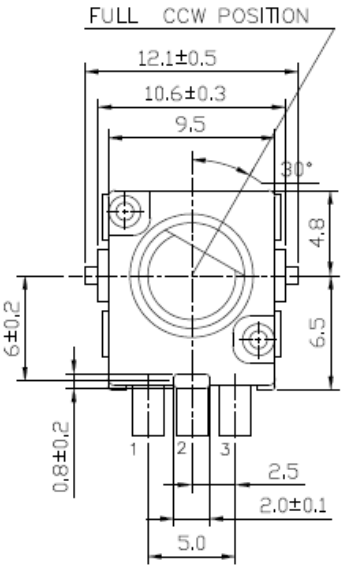

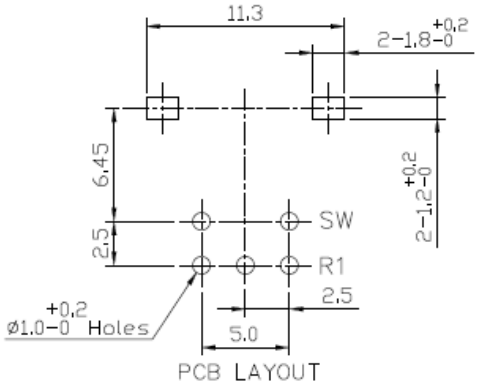

PCB LAYOUT

E−TYPE

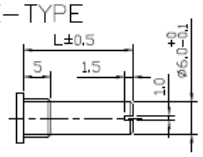

L	10	15	20	25	30

F−TYPE

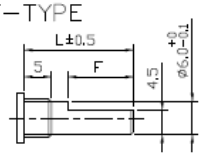

L	10	15	20	25	30
F	4	7	12	12	12

Q−TYPE

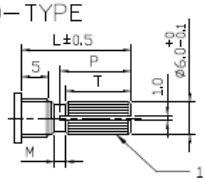

L	10	15	20	25	30
P	4	7	13	14	14
T	4	6	12	12	12
M	1	1	2	2	4

General Note
TT Electronics reserves the right to make changes in product specification without notice or liability. All information is subject to TT Electronics' own data and is considered accurate at time of going to print.

© TT electronics plc

TT Electronics | BI Technologies
413 Rood Rd, Suite 7
Calexico, CA 92231
Ph: + 1 (714) 447-2345
www.ttelectronics.com

Panel Potentiometer

Model P09x Series

Outline Drawings

Model P09xP (Side Adjust, PCB pins, with Push-Lock, up to 2 gangs)

X = Number of Gangs

X	1	2
H	20.75	23.25

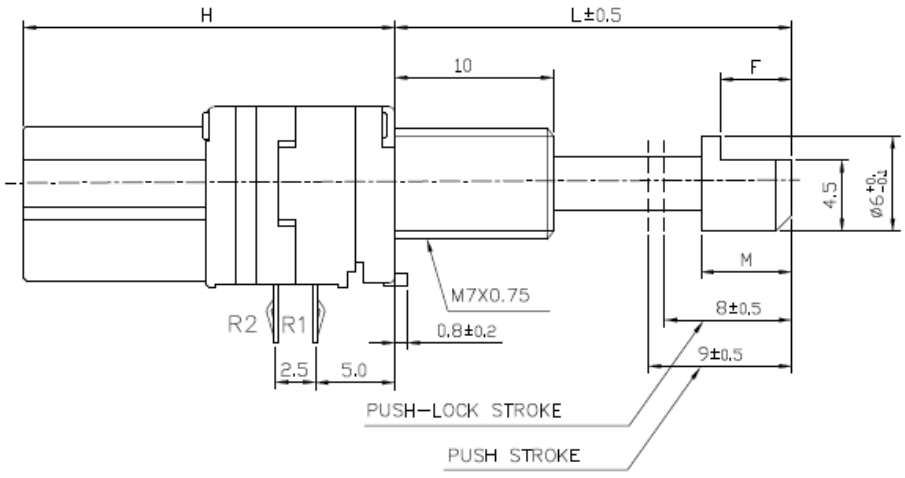

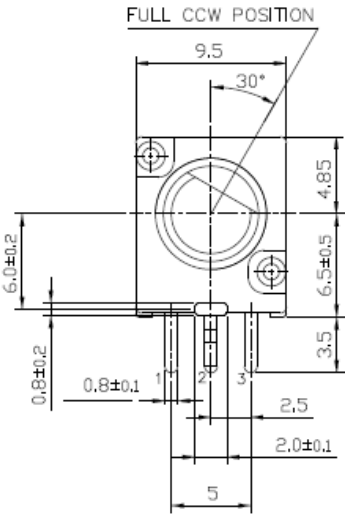

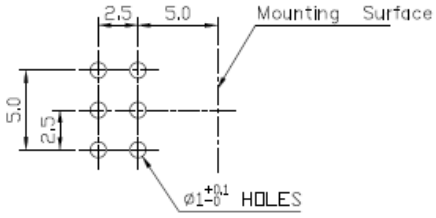

PCB LAYOUT

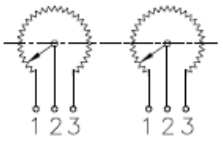

CIRCUIT DIAGRAM

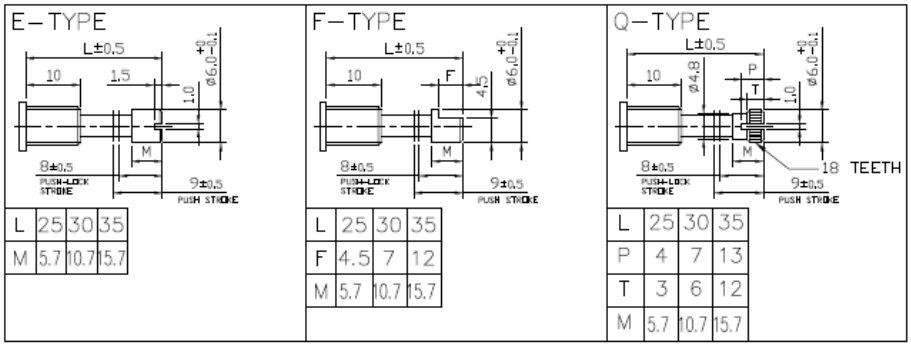

L	25	30	35
M	5.7	10.7	15.7

L	25	30	35
F	4.5	7	12
M	5.7	10.7	15.7

L	25	30	35
P	4	7	13
T	3	6	12
M	5.7	10.7	15.7

General Note
TT Electronics reserves the right to make changes in product specification without notice or liability. All information is subject to TT Electronics' own data and is considered accurate at time of going to print.

© TT electronics plc

TT Electronics | BI Technologies
413 Rood Rd, Suite 7
Calexico, CA 92231
Ph: + 1 (714) 447-2345
www.ttelectronics.com

Panel Potentiometer

Model P09x Series

Outline Drawings

Model P09xC (Side Adjust, PCB pins with Concentric Shaft, 2 to 4 gangs)

2 GANG

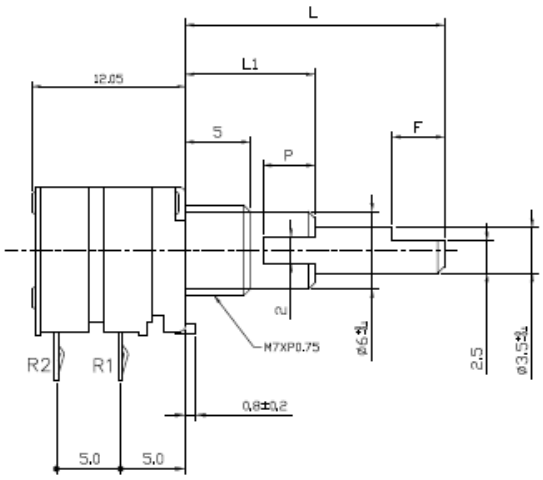

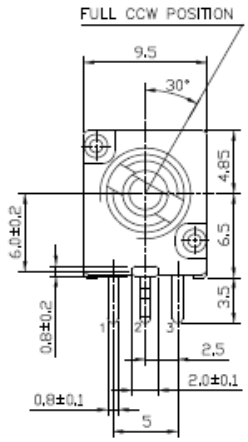

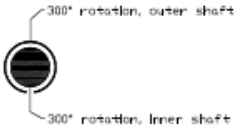

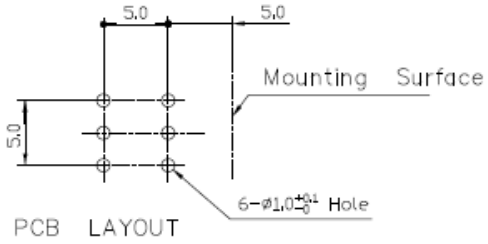

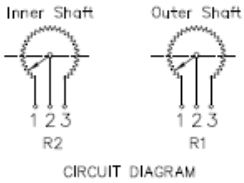

3 GANG

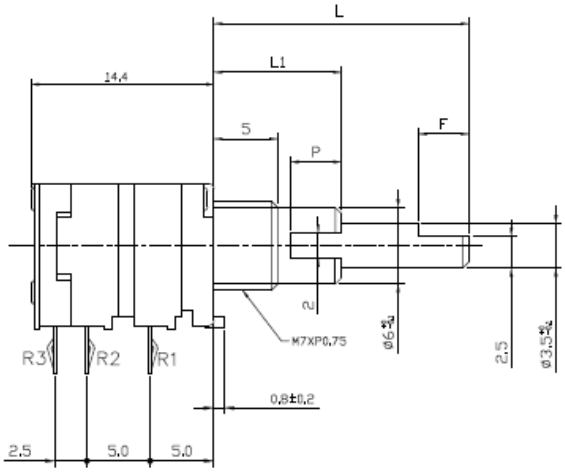

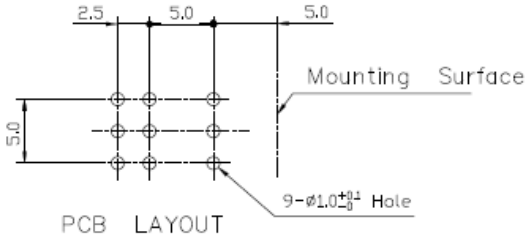

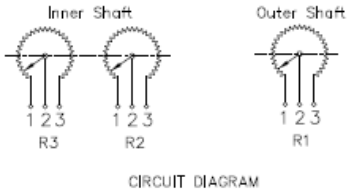

General Note
TT Electronics reserves the right to make changes in product specification without notice or liability. All information is subject to TT Electronics' own data and is considered accurate at time of going to print.

© TT electronics plc

TT Electronics | BI Technologies
413 Rood Rd, Suite 7
Calexico, CA 92231
Ph: + 1 (714) 447-2345
www.ttelectronics.com

Outline Drawings

Model P09xC (Side Adjust, PCB pins with Concentric Shaft, 2 to 4 gangs), continued

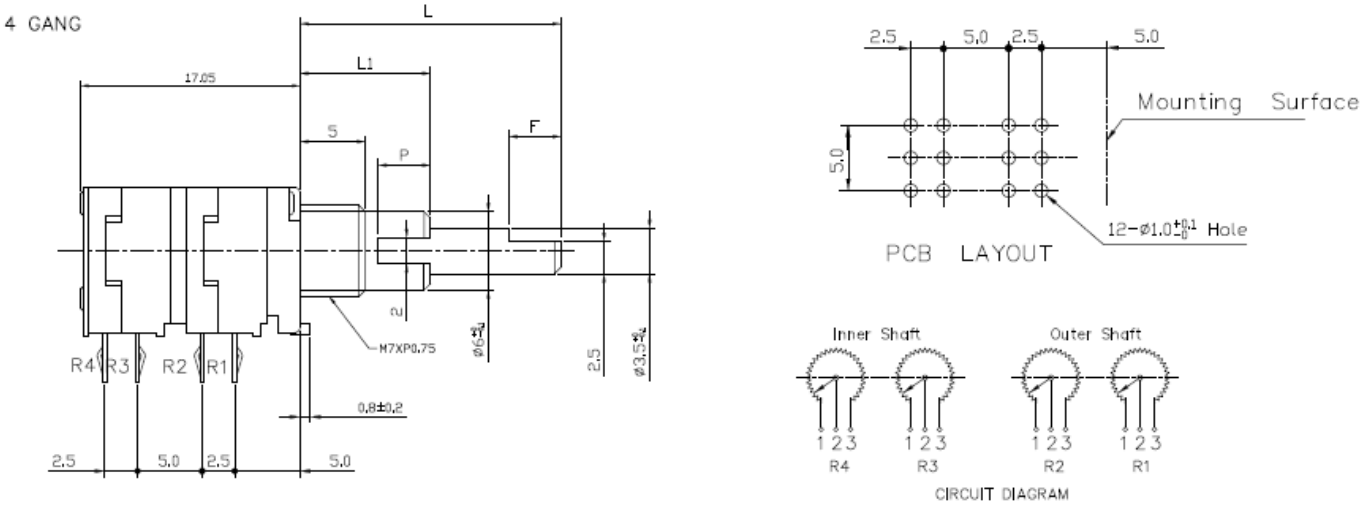

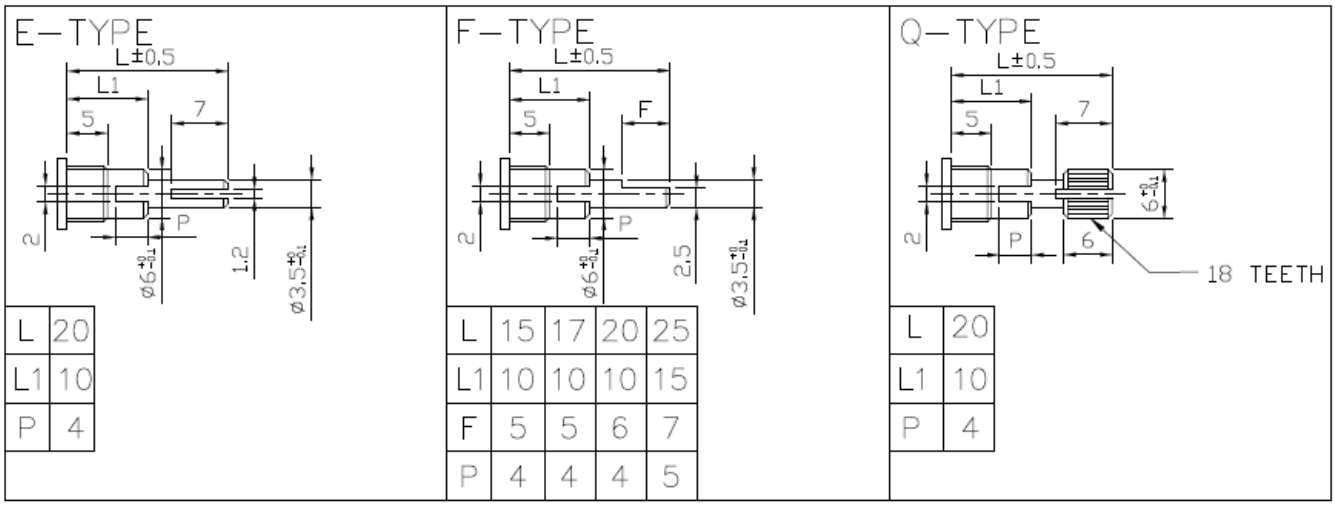

L	20
L1	10
P	4

L	15	17	20	25
L1	10	10	10	15
F	5	5	6	7
P	4	4	4	5

L	20
L1	10
P	4

Note: L = 17 is 17.5mm

General Note
TT Electronics reserves the right to make changes in product specification without notice or liability. All information is subject to TT Electronics' own data and is considered accurate at time of going to print.

© TT electronics plc

Panel Potentiometer

Model P09x Series

Outline Drawings

Model P092T (Side Adjust, PCB pins, with Center Tap, 2 gangs only)

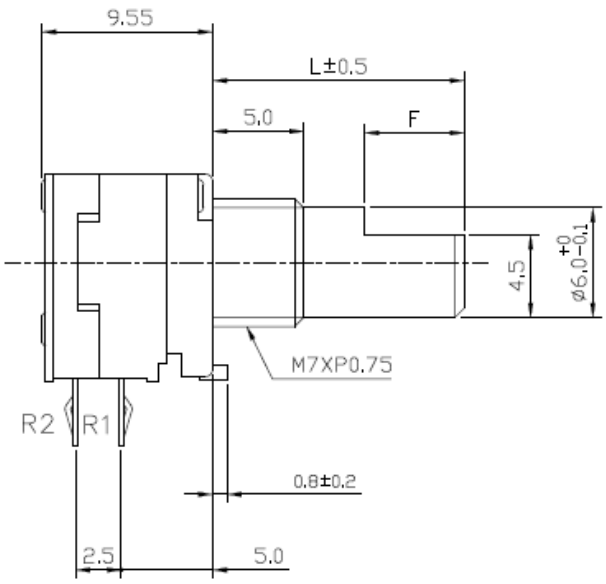

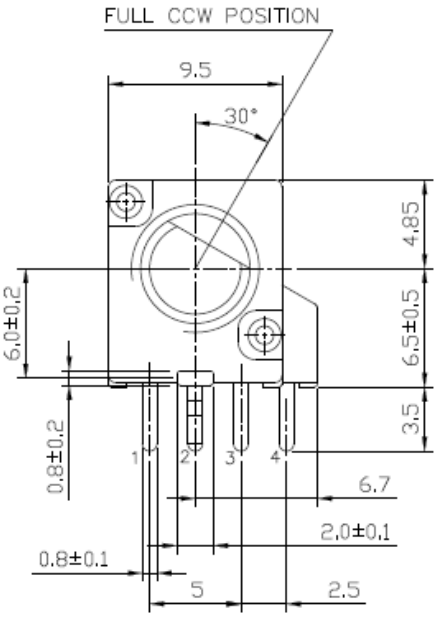

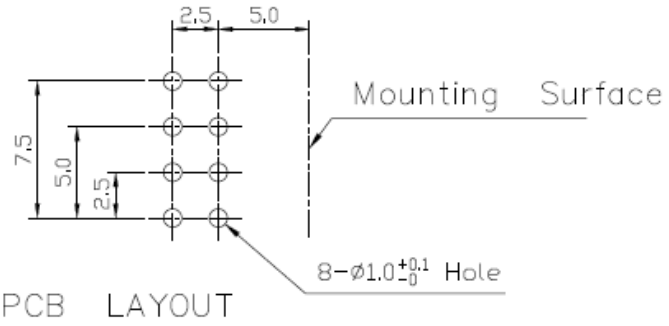

PCB LAYOUT

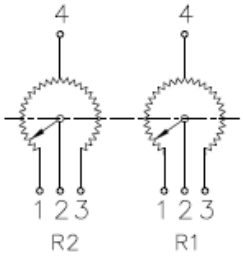

CIRCUIT DIAGRAM

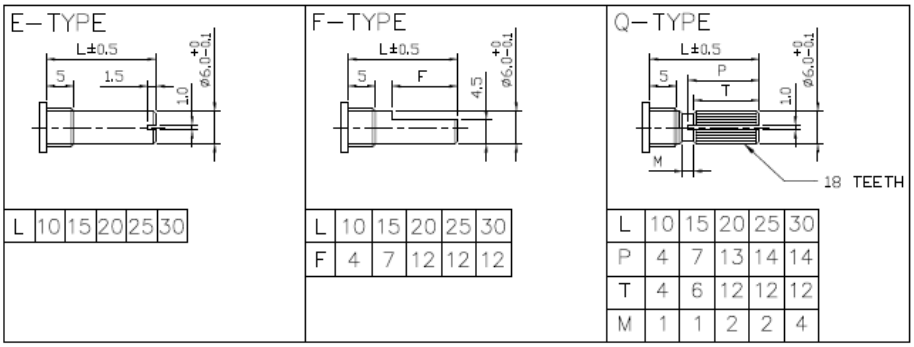

L	10	15	20	25	30

L	10	15	20	25	30
F	4	7	12	12	12

L	10	15	20	25	30
P	4	7	13	14	14
T	4	6	12	12	12
M	1	1	2	2	4

General Note
TT Electronics reserves the right to make changes in product specification without notice or liability. All information is subject to TT Electronics' own data and is considered accurate at time of going to print.

© TT electronics plc

TT Electronics | BI Technologies
413 Rood Rd, Suite 7
Calexico, CA 92231
Ph: + 1 (714) 447-2345
www.ttelectronics.com

Panel Potentiometer

Model P09x Series

Outline Drawings

Model P091B (Side Adjust, PCB pins, with Rotary and Momentary Switches, 1 gang only)

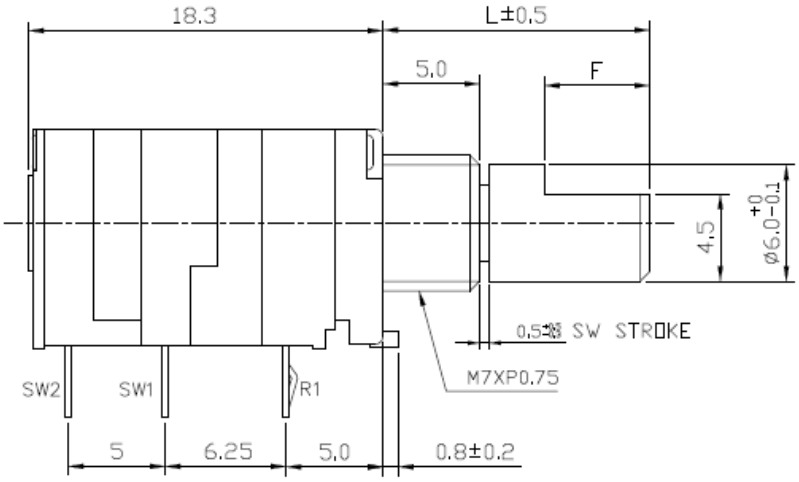

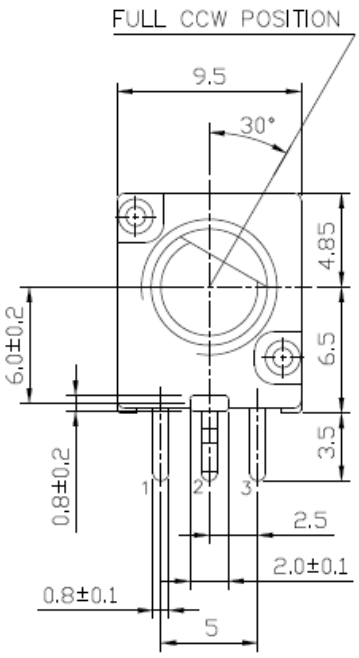

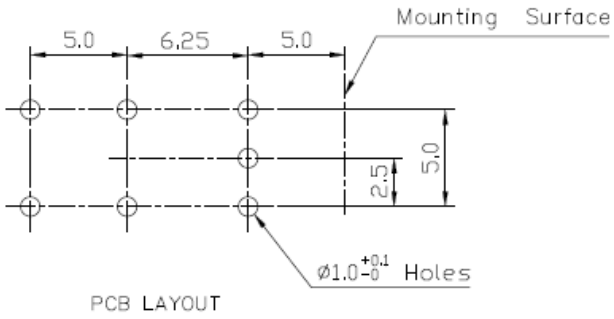

PCB LAYOUT

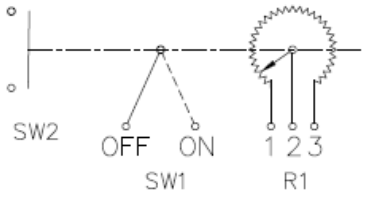

CIRCUIT DIAGRAM

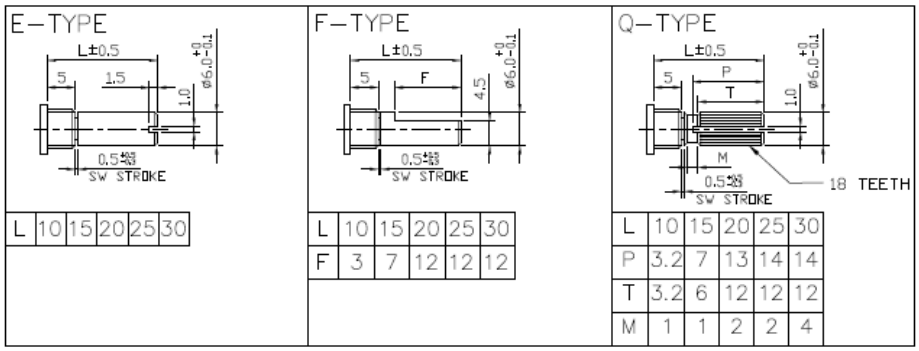

L	10	15	20	25	30

L	10	15	20	25	30
F	3	7	12	12	12

L	10	15	20	25	30
P	3.2	7	13	14	14
T	3.2	6	12	12	12
M	1	1	2	2	4

General Note
TT Electronics reserves the right to make changes in product specification without notice or liability. All information is subject to TT Electronics' own data and is considered accurate at time of going to print.

© TT electronics plc

Panel Layout

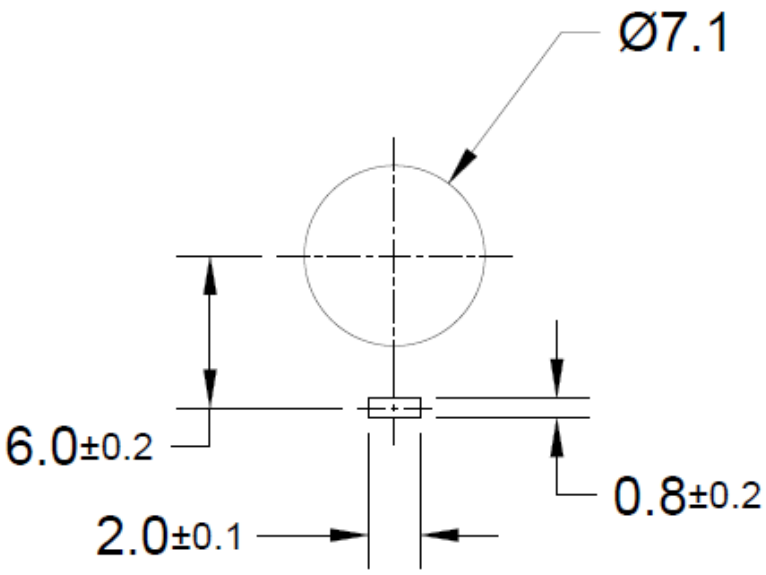

General Note
TT Electronics reserves the right to make changes in product specification without notice or liability. All information is subject to TT Electronics' own data and is considered accurate at time of going to print.

© TT electronics plc

TT Electronics | BI Technologies
413 Rood Rd, Suite 7
Calexico, CA 92231
Ph: + 1 (714) 447-2345
www.ttelectronics.com

Note 2: Standard Tapers

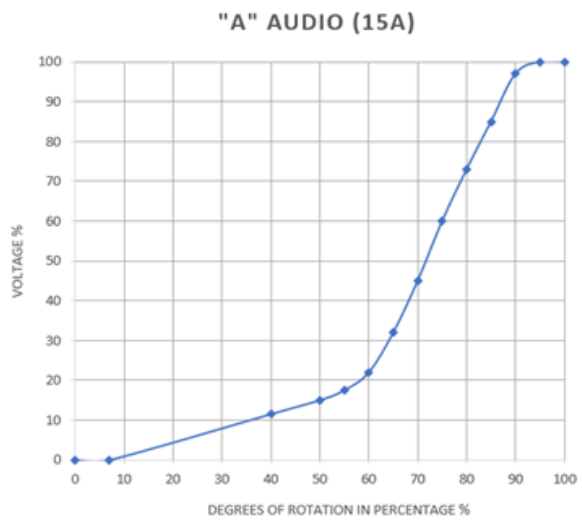

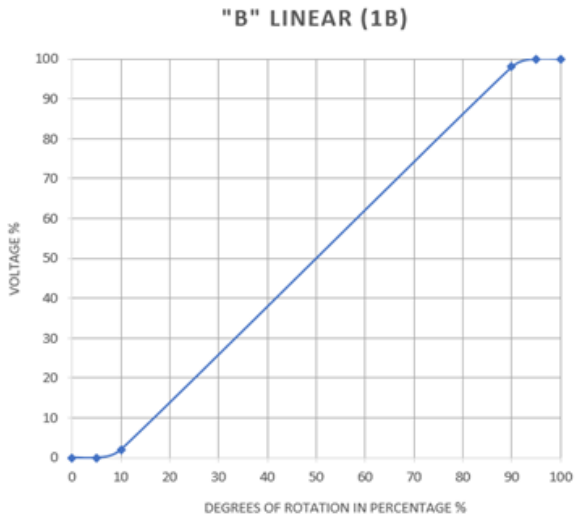

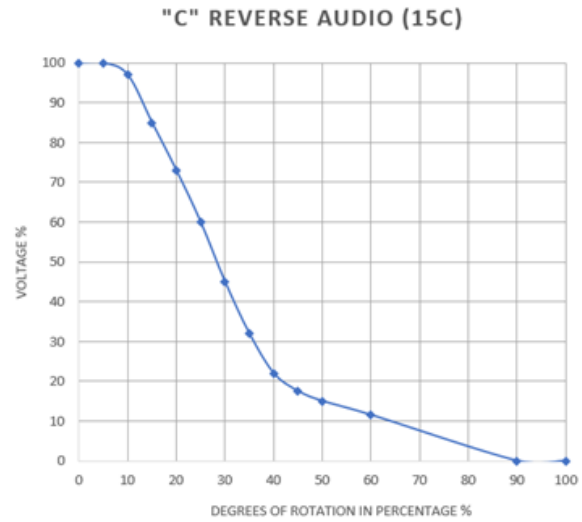

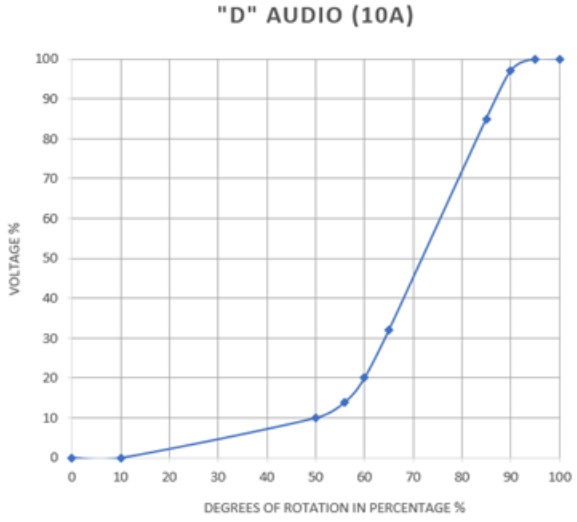

Packaging

Standard Packaging	Plastic Trays
Hardware	Two flat washers and mounting nut

General Note
TT Electronics reserves the right to make changes in product specification without notice or liability. All information is subject to TT Electronics' own data and is considered accurate at time of going to print.

© TT electronics plc

TT Electronics | BI Technologies
413 Rood Rd, Suite 7
Calexico, CA 92231
Ph: + 1 (714) 447-2345
www.ttelectronics.com