Panel Potentiometer

P260 / P261 Series

TT Electronics PRO AUDIO

TT Electronics

Features:

- Sealed / dust proof
- 1,000,000 cycle life
- Rotary switch option
- Detent and wire lead options
- Multiple gangs available
- **Meets MIL-PRF-94 requirements**

RoHS compliant





Description:

12.7mm (1/2") Square, Rotary Potentiometer, with metal shaft and bushing. Options include audio and linear resistance tapers; flatted and slotted shafts

Applications:

- Electric Guitars, Amplifiers, Mixers
- Drum Machines, Synthesizers

Model Styles Available

Side Adjust, PCB Leads, Potentiometer Module (Up to 6 gangs)	P260P
Side Adjust, PCB Leads, with Rotary Switch Module (Up to 5 gangs)	P260S
Side Adjust, PCB Leads, with Detent Module (Up to 6 gangs)	P260D
Top Adjust, PCB Leads, Potentiometer Module (Up to 2 gangs)	P260T
Potentiometer Module with Wire Leads (Up to 6 gangs)	P260L
Potentiometer Module with Ribbon Cable (Up to 6 gangs)	P260R
Side Adjust, Solder Lug Leads, Potentiometer Module (Up to 6 gangs)	P261P
Side Adjust, Solder Lug Leads, with Rotary Switch Module (Up to 5 gangs)	P261S
Side Adjust, Solder Lug Leads, with Detent Module (Up to 6 gangs)	P261D

Electrical Characteristics

T_A = 25°C unless otherwise noted

Resistance Range	500-1M (for "B" taper), 2K-1M (for other tapers)
Standard Resistance Tolerance	±10%
Residual Resistance, Maximum	2 Ω
Resistance Taper	Audio ("A", "C", "D"), Linear ("B") see note 3
Maximum Operating Voltage	350 Vac
Rated Power	0.5W ("B" taper), 0.25W (other tapers)
Dielectric Strength	1,500 Vac, sea level
Nominal Electrical Travel	265°
Insulation Resistance	1,000 MΩ
Gang Error (Dual Unit)	±3dB (-40dB to 0dB)

General Note
TT Electronics reserves the right to make changes in product specification without notice or liability. All information is subject to TT Electronics' own data and is considered accurate at time of going to print.

© TT electronics plc

TT Electronics | BI Technologies
413 Rood RD, Suite 7
Calexico, CA 92231
Ph: + 1 (714) 447-2345
www.ttelectronics.com

Switch Characteristics

T_A = 25°C unless otherwise noted

Switch Circuit	SPDT
Contact Resistance, Maximum	150 mΩ
Rated Power	0.5 A at 30 Vdc
Switch Life	50,000 cycles

Mechanical Characteristics

T_A = 25°C unless otherwise noted

Mechanical Travel (Rotational angle)	295° ± 10°
Rotational Torque, Maximum	108 gf.cm (36 gf.cm in each additional gang)
Rotational Stop Strength	2,880 gf.cm
Detent Torque, Minimum	144 gf.cm
Nut Tightening Strength	8 kgf.cm minimum
Rotational Life	1,000,000 cycles

Environmental Characteristics

T_A = 25°C unless otherwise noted

Operating Temperature	-55°C to +125°C
IP Rating	Sealed = IP66 Dust proof = IP50
Soldering Condition	Wave Soldering 260°C maximum for 1-3 seconds Hand Soldering 300°C maximum for 3 seconds
RoHS	Please refer to TT Electronics Website
REACH	Please refer to TT Electronics Website

Packaging

Standard Packaging	Plastic Trays
Hardware: A (3.2mm) Shaft	Lockwasher and Mounting Nut
B (6.35mm) Shaft	Flat Washer, Lockwasher, and Mounting Nut

General Note
TT Electronics reserves the right to make changes in product specification without notice or liability. All information is subject to TT Electronics' own data and is considered accurate at time of going to print.

© TT electronics plc

TT Electronics | BI Technologies
413 Rood RD, Suite 7
Calexico, CA 92231
Ph: + 1 (714) 447-2345
www.ttelectronics.com

Panel Potentiometer

P260 / P261 Series

Ordering Information

P260	D	-	D	2	1	A	F	1	C	B	100K

Part Family
P260 - PC Pins, Wires, or Ribbon Cable
P261 - Solder Lugs (only P, S, and D styles)

Style
P - Potentiometer
S - with Switch
D - with Detent Module
T - Top Adjust
L - with Lead Wires
R - with Ribbon Cable

Seal Type
S = Sealed
D = Dust Proof

Number of gangs
Up to 6
(2 max. on T style and 5 max. on S style)

Detent (D style only)
Omit = No Detent
1 = Center Detent
2 = 11 Detents
3 = 21 Detents

Bushing and Shaft size
A = 3.2mm shaft
B = 6.35mm shaft
(See Note 1)

Total Resistance
See Resistance Table below

Resistance Taper
A = Audio (15A)
B = Linear(1B)
C= Reverse Audio(15C)
D= Audio (10A)
(See Note 4)

Full CCW Position
(See Note 3)

Shaft Length code
(See Note 2)

Shaft type
S = Slotted
F = Flatted
(See Note 2)

Resistance table										
Resistance	1,000	2,000	5,000	10,000	20,000	50,000	100,000	200,000	500,000	1,000,000
Code	1K	2K	5K	10K	20K	50K	100K	200K	500K	1MEG

General Note
TT Electronics reserves the right to make changes in product specification without notice or liability. All information is subject to TT Electronics' own data and is considered accurate at time of going to print.

© TT electronics plc

TT Electronics | BI Technologies
413 Rood RD, Suite 7
Calexico, CA 92231
Ph: + 1 (714) 447-2345
www.ttelectronics.com

Outline Drawings

Note 1:
Bushing and Shaft Combinations

CODE	BUSHING SIZE	BUSHING LENGTH "M"	SHAFT ø	ANTI–ROTATION LUG (mm)
A	6.35mm (1/4")	6.35mm (1/4")	3.2mm (1/8")	2.0±0.1 x 1.0±0.1 x 1.0 TALL
B	9.5mm (3/8")	9.5mm (3/8")	6.35mm (1/4")	1.8±0.1 x 0.6±0.1 x 1.0 TALL

Anti-Rotation Lug Sizes

A:

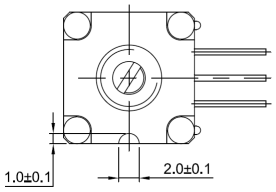

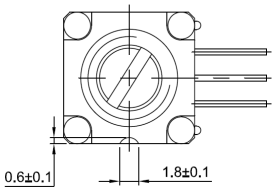

B:

Note 2:
Shaft Type and Shaft Length "L" Code
For 3.2mm (1/8")

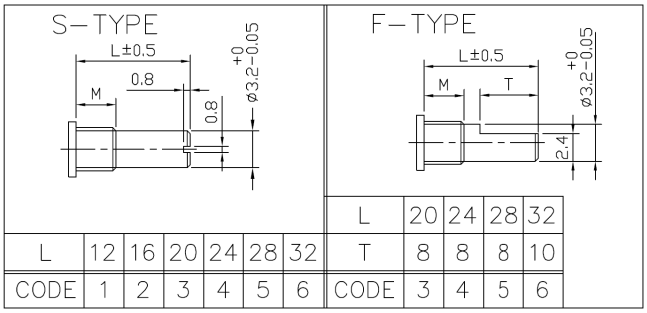

L	12	16	20	24	28	32
CODE	1	2	3	4	5	6

L	20	24	28	32
T	8	8	8	10
CODE	3	4	5	6

Shaft Type and Shaft Length "L" Code
For 6.35mm (1/4")

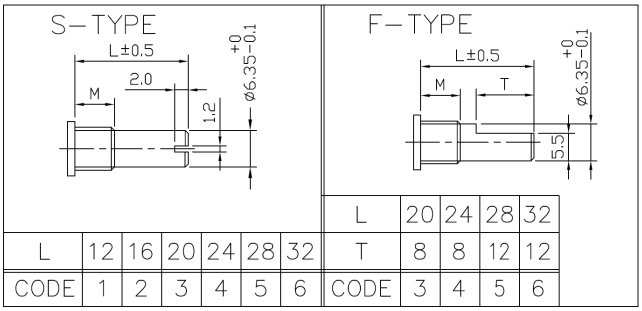

L	12	16	20	24	28	32
CODE	1	2	3	4	5	6

L	20	24	28	32
T	8	8	12	12
CODE	3	4	5	6

Note 3:
Shaft Position (F-Type Shaft)
Dashed lines on Type "C" and Type "A" shows position of adjustment slot for S-Type shaft

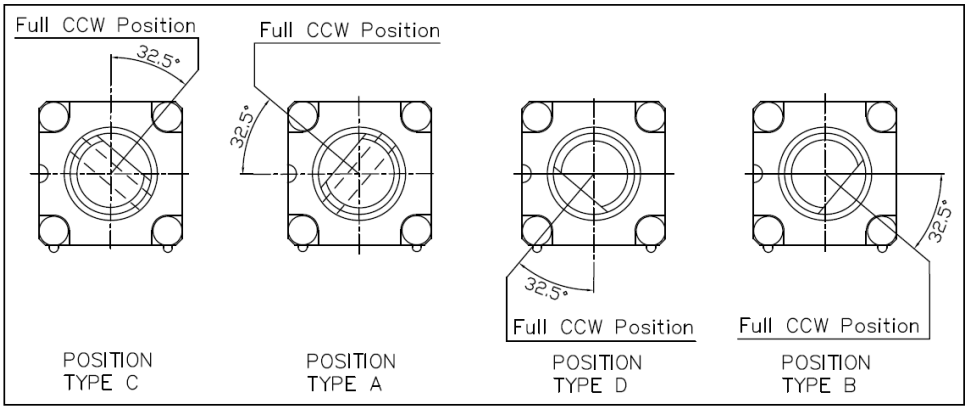

General Note
TT Electronics reserves the right to make changes in product specification without notice or liability. All information is subject to TT Electronics' own data and is considered accurate at time of going to print.

© TT electronics plc

TT Electronics | BI Technologies
413 Rood RD, Suite 7
Calexico, CA 92231
Ph: + 1 (714) 447-2345
www.ttelectronics.com

Outline Drawings

P260P/P261P—POTENTIOMETER MODULE

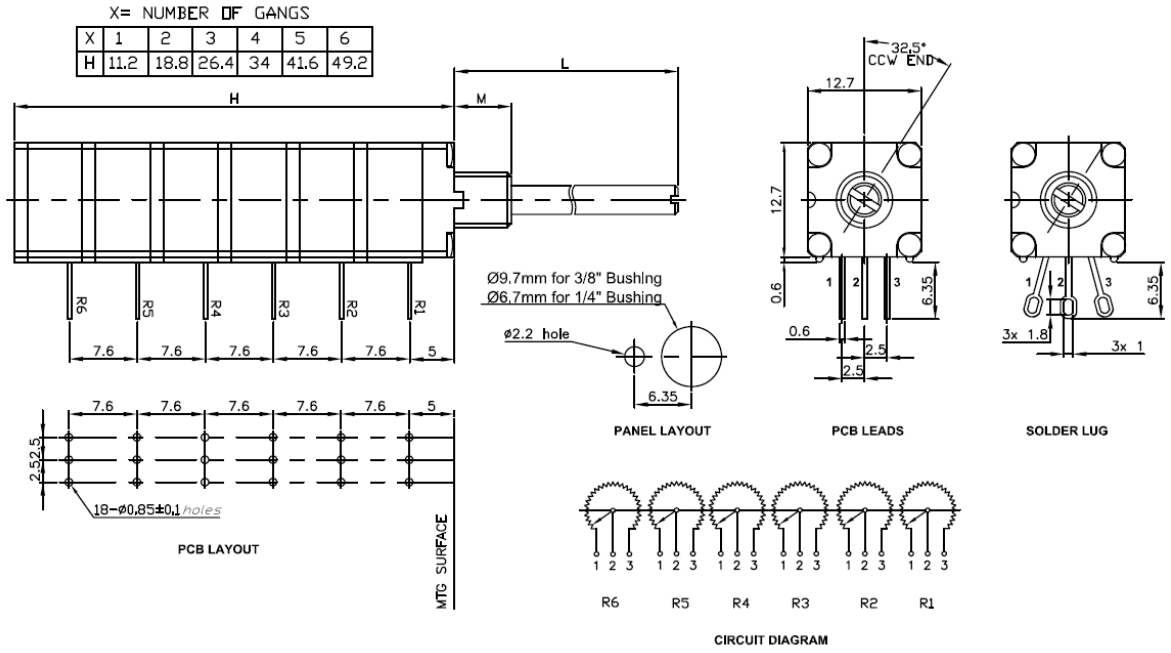

P260S/P261S— WITH ROTARY SWITCH MODULE

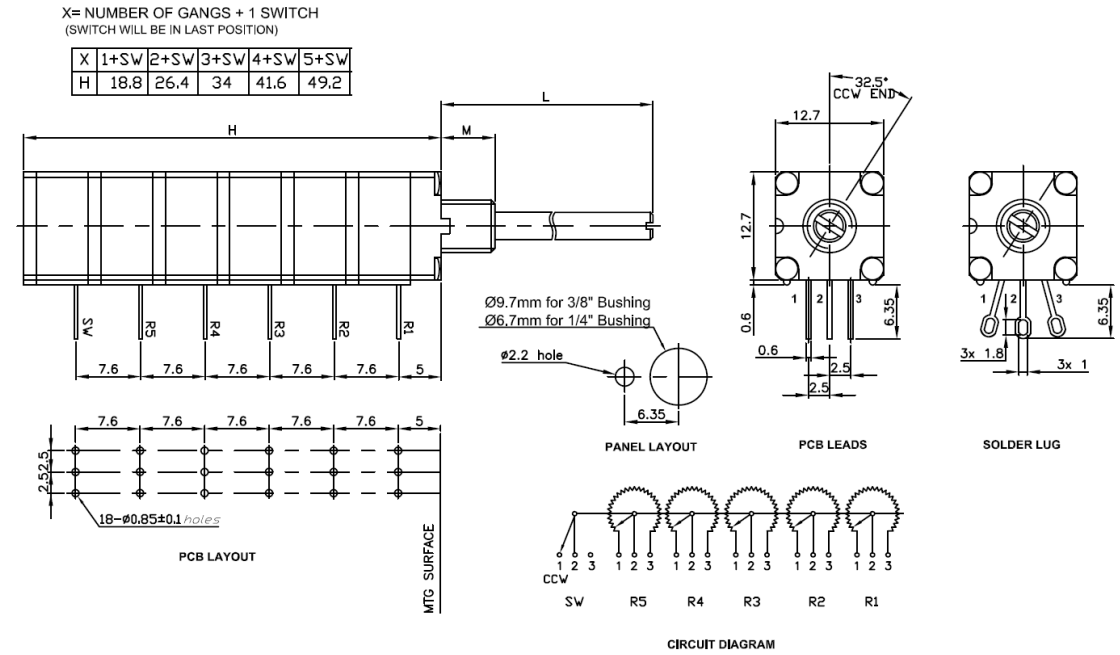

General Note
TT Electronics reserves the right to make changes in product specification without notice or liability. All information is subject to TT Electronics' own data and is considered accurate at time of going to print.

© TT electronics plc

TT Electronics | BI Technologies
413 Rood RD, Suite 7
Calexico, CA 92231
Ph: + 1 (714) 447-2345
www.ttelectronics.com

Outline Drawings

P260D/P261D—WITH DETENT MODULE

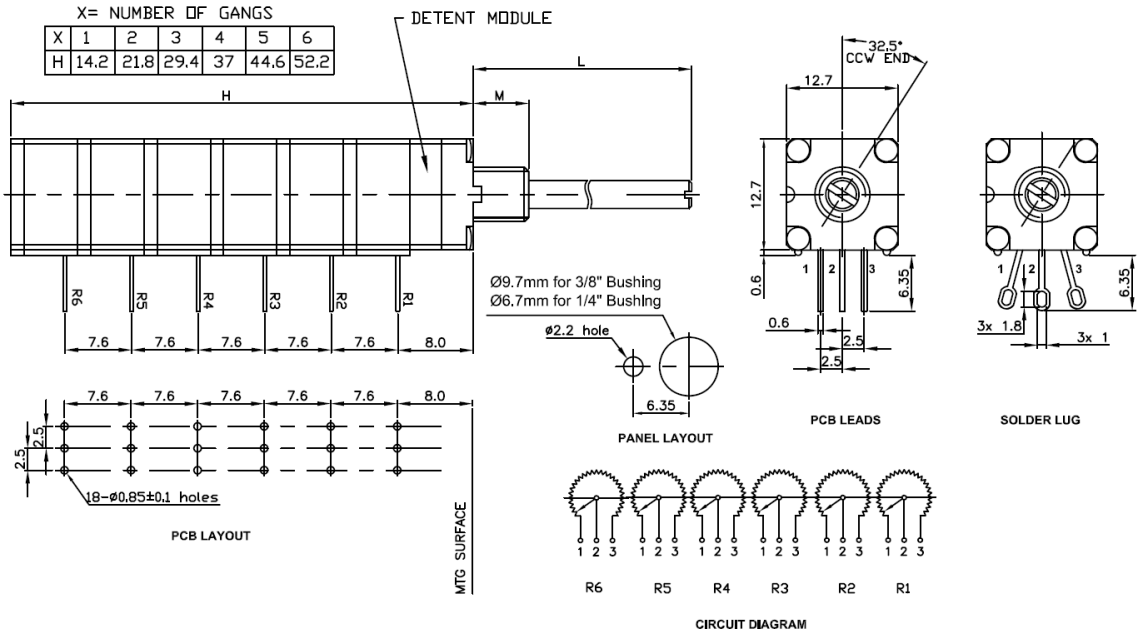

P260T—TOP ADJUST, POTENTIOMETER MODULE

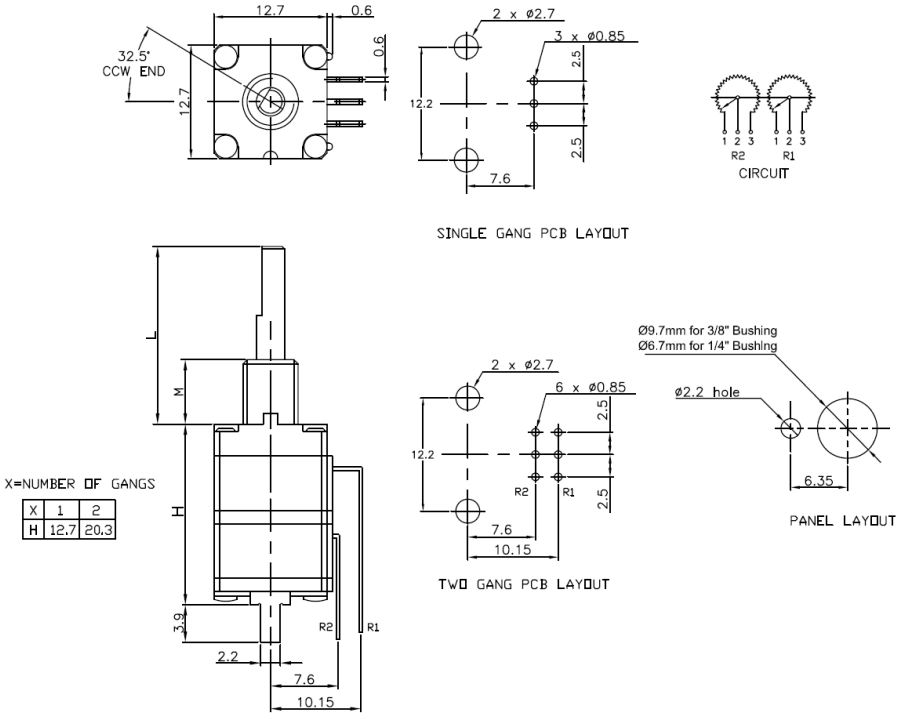

General Note
TT Electronics reserves the right to make changes in product specification without notice or liability. All information is subject to TT Electronics' own data and is considered accurate at time of going to print.

© TT electronics plc

TT Electronics | BI Technologies
413 Rood RD, Suite 7
Calexico, CA 92231
Ph: + 1 (714) 447-2345
www.ttelectronics.com

Outline Drawings

P260L - WITH WIRE LEADS

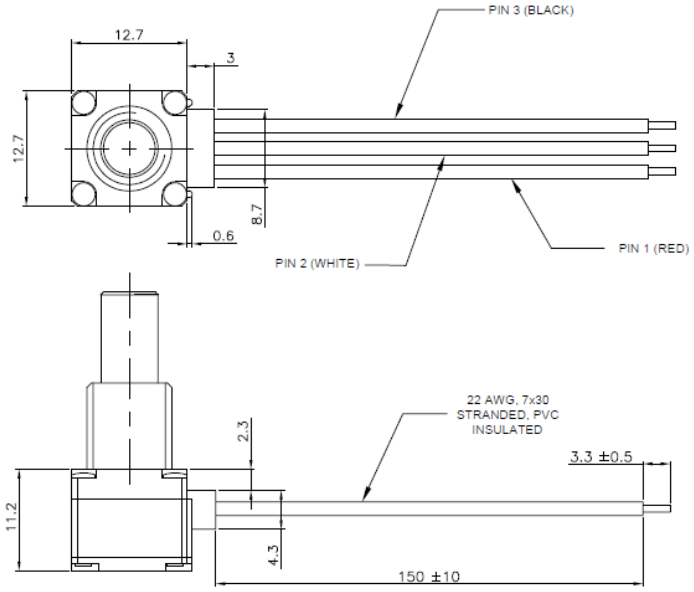

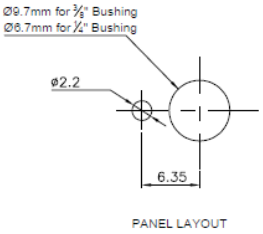

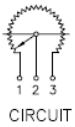

Contact Factory for Custom Options

P260R - WITH RIBBON CABLE

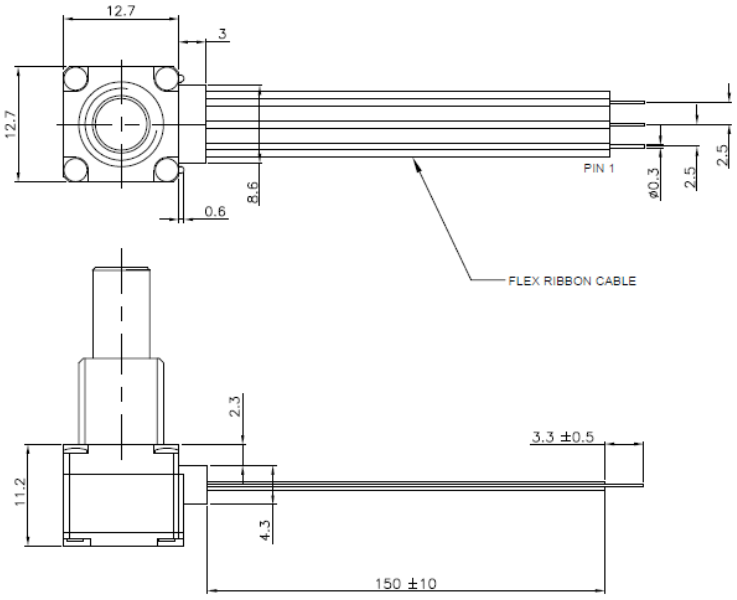

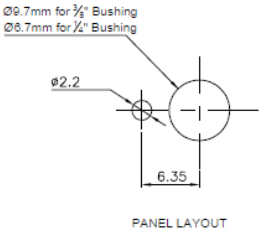

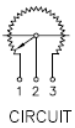

Contact Factory for Custom Options

General Note
TT Electronics reserves the right to make changes in product specification without notice or liability. All information is subject to TT Electronics' own data and is considered accurate at time of going to print.

© TT electronics plc

TT Electronics | BI Technologies
413 Rood RD, Suite 7
Calexico, CA 92231
Ph: + 1 (714) 447-2345
www.ttelectronics.com

Note 4: Standard Tapers

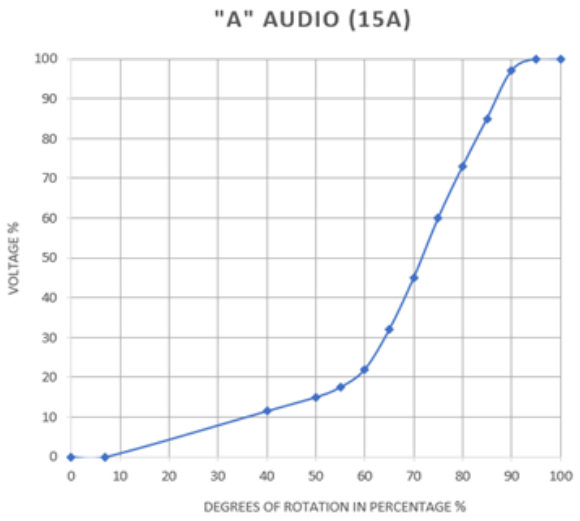

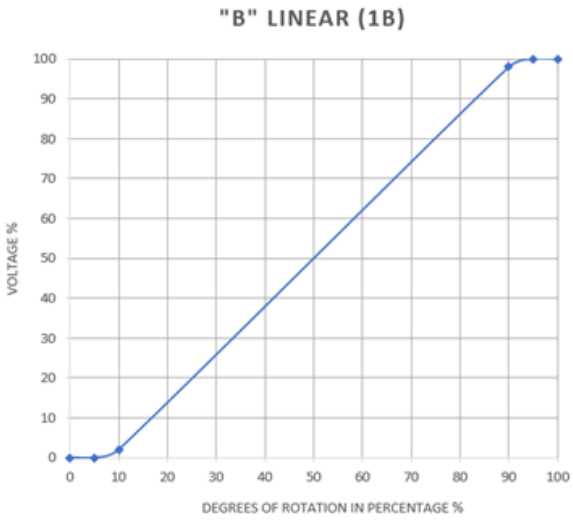

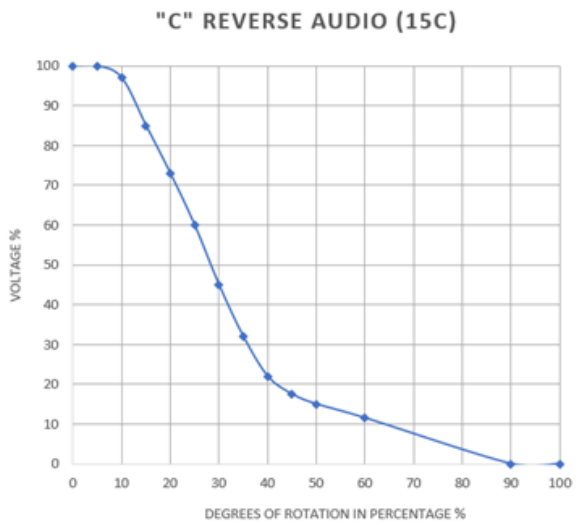

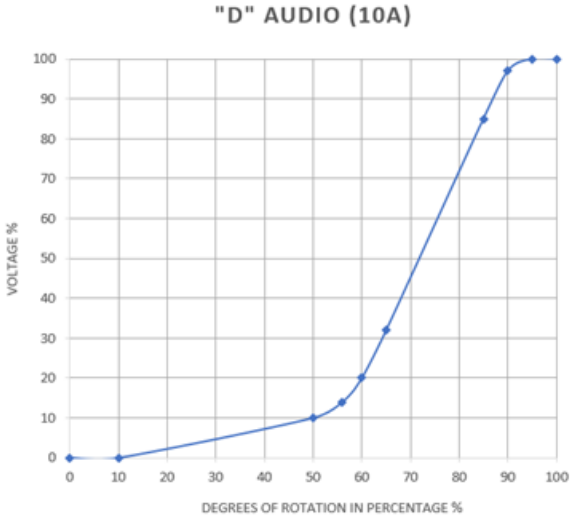

General Note
TT Electronics reserves the right to make changes in product specification without notice or liability. All information is subject to TT Electronics' own data and is considered accurate at time of going to print.

© TT electronics plc

TT Electronics | BI Technologies
413 Rood RD, Suite 7
Calexico, CA 92231
Ph: + 1 (714) 447-2345
www.ttelectronics.com