1/2” Round
Rotary Potentiometer

P265 Series

TT Electronics
PRO AUDIO

TT Electronics

Features:

- Resistance Range 500 Ω to 1M Ω
- Temperature Range -40°C to +120°C
- Rotational Cycles of 50,000 minimum
- PC Pins and Solder hook versions
- RoHS compliant
- **Direct Cross to Honeywell 392 / RV6**

RoHS compliant





Description:

1/2” Round Rotary Potentiometer, with metal shaft and bushing. Options include audio and linear tapers; plain, flatted and slotted shaft types.

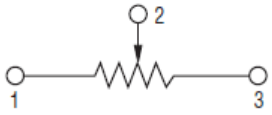

SCHEMATIC

Single Gang

Applications:

- Audio and visual equipment
- Hand held equipment
- Test and measurement equipment
- Communication equipment
- Laboratory and test equipment

Electrical Characteristics

T_A = 25°C unless otherwise noted

Resistance Range	500 Ω to 1M Ω
Standard Resistance Tolerance	500 Ω<R<1M Ω ± 10% R≤500 Ω or R≥1M Ω ± 20%
Residual Resistance	Term. 1~2: Less than 4 Ω Term: 2~3: Less than 4 Ω
Resistance Taper	A, B, C, D
Maximum Operating Voltage	Linear Taper B: 200 Vac Other Tapers: 150 Vac
Rated Power	Linear Taper B: 0.5 W Others: 0.25 W
Dielectric Strength	1 minute at 500 Vac
Rotational Noise	Less than 100 mV
Insulation Resistance	More than 100 MΩ at 500 Vdc
Linearity tolerance	±5% Independent
Electrical rotation	265° ±5°

General Note
TT Electronics reserves the right to make changes in product specification without notice or liability. All information is subject to TT Electronics’ own data and is considered accurate at time of going to print.

© TT electronics plc

TT Electronics | BI Technologies
413 Rood RD, Suite 7
Calexico, CA 92231
Ph: + 1 (714) 447-2345
www.ttelectronics.com

Mechanical Characteristics

T_A = 25°C unless otherwise noted

Mechanical Travel	300° ± 5°
Rotational Torque	20 gf.cm~200 gf.cm
Rotational Stop Strength	3.5 kgf.cm minimum
Shaft Pull Strength	3.5 kgf minimum for 60 seconds
Nut Tightening Strength	8 kgf.cm minimum
Rotational Life	50,000 Cycles minimum

Environmental Characteristics

T_A = 25°C unless otherwise noted

Operating Temperature	-40°C to +120°C
IP Rating	IP 64
Soldering Condition	Wave Soldering 260 °C maximum for 1-3 seconds Hand Soldering 300 °C maximum for 3 seconds
RoHS	Please refer to TT Electronics website
REACH	Please refer to TT Electronics website

Packaging Information

Standard Packaging	Plastic Trays
Hardware	Flat washer and mounting nut

General Note
TT Electronics reserves the right to make changes in product specification without notice or liability. All information is subject to TT Electronics’ own data and is considered accurate at time of going to print.

© TT electronics plc

TT Electronics | BI Technologies
413 Rood RD, Suite 7
Calexico, CA 92231
Ph: + 1 (714) 447-2345
www.ttelectronics.com

1/2” Round
Rotary Potentiometer
P265 Series

Ordering Information

P265	P	1	1	S	20	N	C	B	10K

Part Family

Terminal Configuration
P - PC Pins
S - Solder Hook

Number of Gangs
1 - 1 Gang

Bushing Length “B”
1 - .250”
2 - .500”

Shaft Type
P - Plain Shaft
F - Flatted Shaft
S - Slotted Shaft

Shaft Length (mm) - “L”
10/13/15/16/20/22/25/51

Switch Option
N - None

Full CCW Position
C (F and S shaft)
N (P Shaft only)
(see Note 1)

Resistance Taper
A - Audio (15A)
B - Linear (1B)
C - Reverse Audio (15C)
D - Audio (10A)

Resistance
See Resistance Table

Resistance Table											
Resistance (Ohms)	500	1,000	2,000	5,000	10,000	20,000	50,000	100,000	200,000	500,000	1,000,000
Code	500	1K	2K	5K	10K	20K	50K	100K	200K	500K	1MEG

General Note
TT Electronics reserves the right to make changes in product specification without notice or liability. All information is subject to TT Electronics’ own data and is considered accurate at time of going to print.

© TT electronics plc

TT Electronics | BI Technologies
413 Rood RD, Suite 7
Calexico, CA 92231
Ph: + 1 (714) 447-2345
www.ttelectronics.com

Standard Tapers

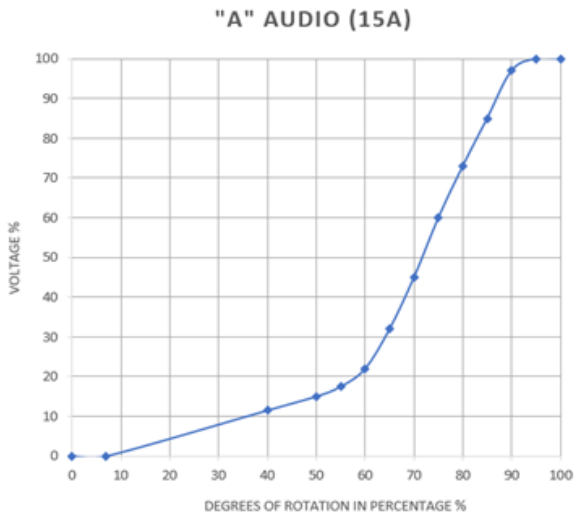

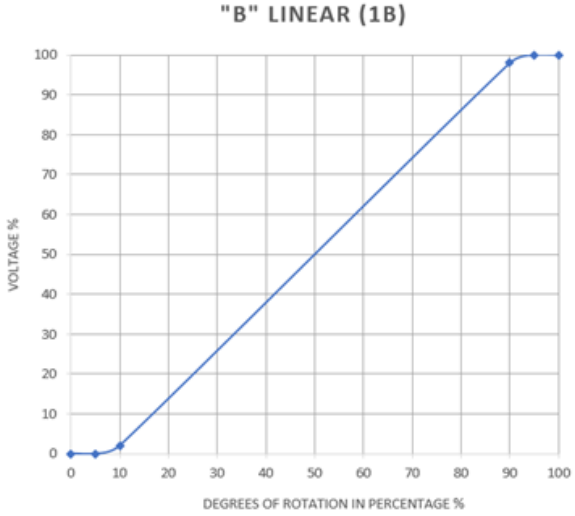

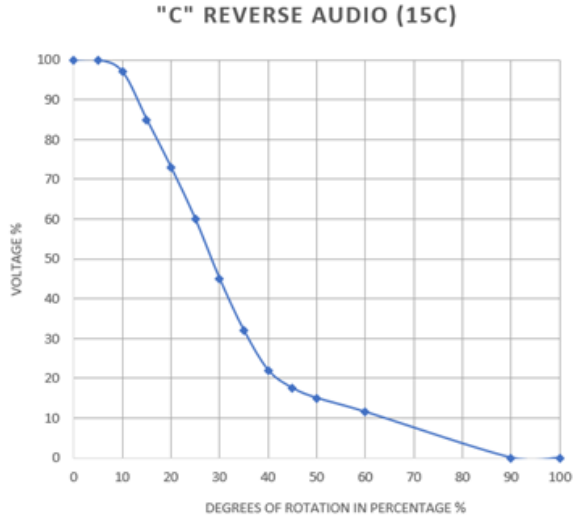

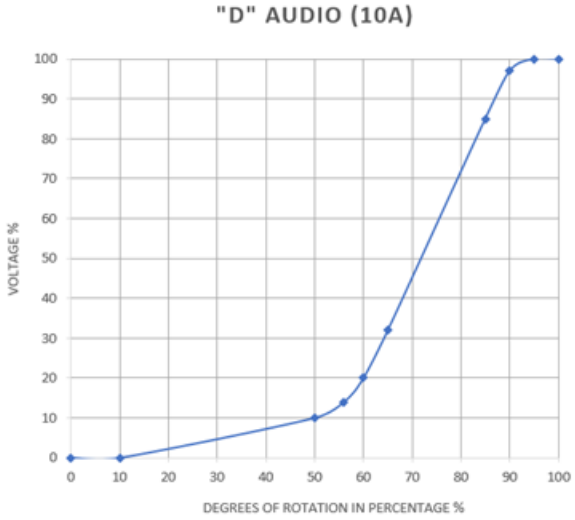

General Note
TT Electronics reserves the right to make changes in product specification without notice or liability. All information is subject to TT Electronics’ own data and is considered accurate at time of going to print.

© TT electronics plc

TT Electronics | BI Technologies
413 Rood RD, Suite 7
Calexico, CA 92231
Ph: + 1 (714) 447-2345
www.ttelectronics.com

Shaft Style & Length

F Type					
L	13	16	20	22	25
F	5	7	12	12	15

S Type						
L	10	15	20	22	25	51

P Type						
L	10	15	20	22	25	51

S–TYPE

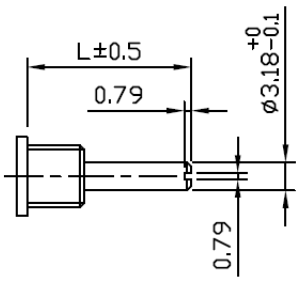

F–TYPE

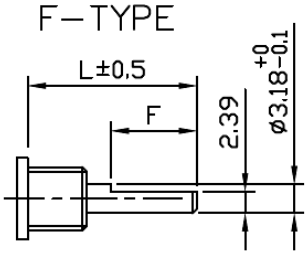

P–TYPE

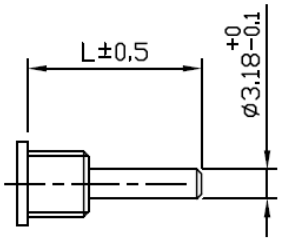

Note 1 : Full CCW Position

C: for S-Type

S-TYPE SHAFT

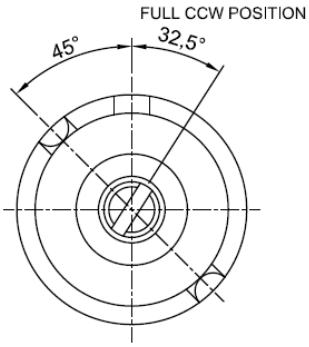

C: for F-Type

F-TYPE SHAFT

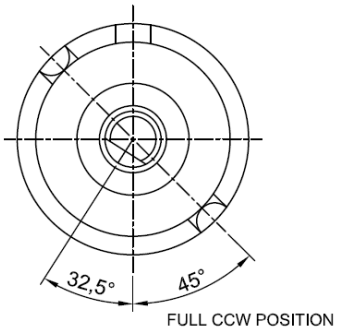

N: None for P-Type

P-TYPE SHAFT

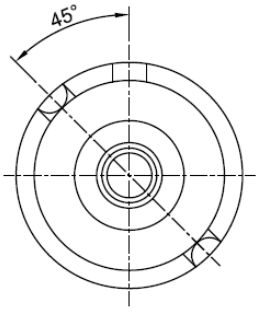

General Note
TT Electronics reserves the right to make changes in product specification without notice or liability. All information is subject to TT Electronics’ own data and is considered accurate at time of going to print.

© TT electronics plc

TT Electronics | BI Technologies
413 Rood RD, Suite 7
Calexico, CA 92231
Ph: + 1 (714) 447-2345
www.ttelectronics.com

OUTLINE DIMENSIONS
P STYLE - PC PINS

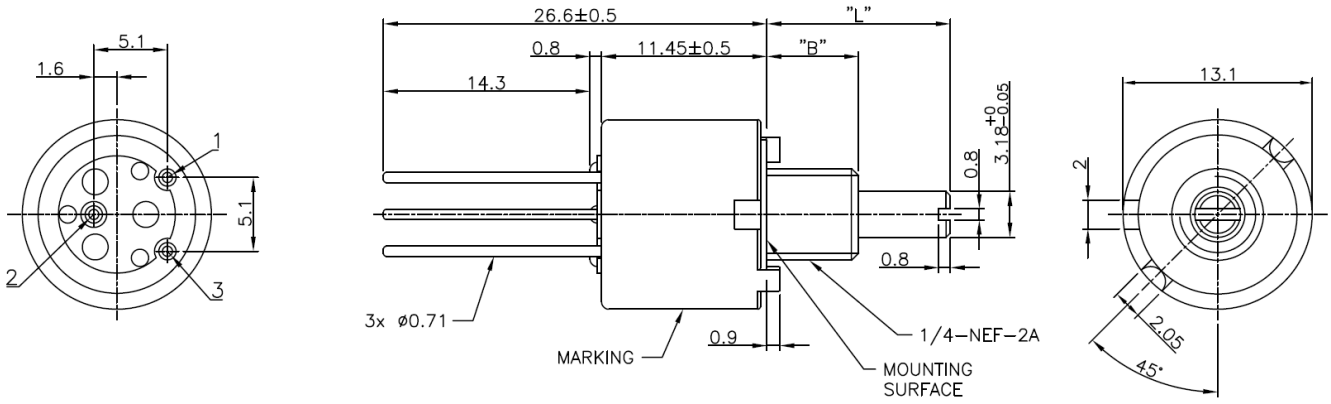

OUTLINE DIMENSIONS
S STYLE - SOLDER HOOK

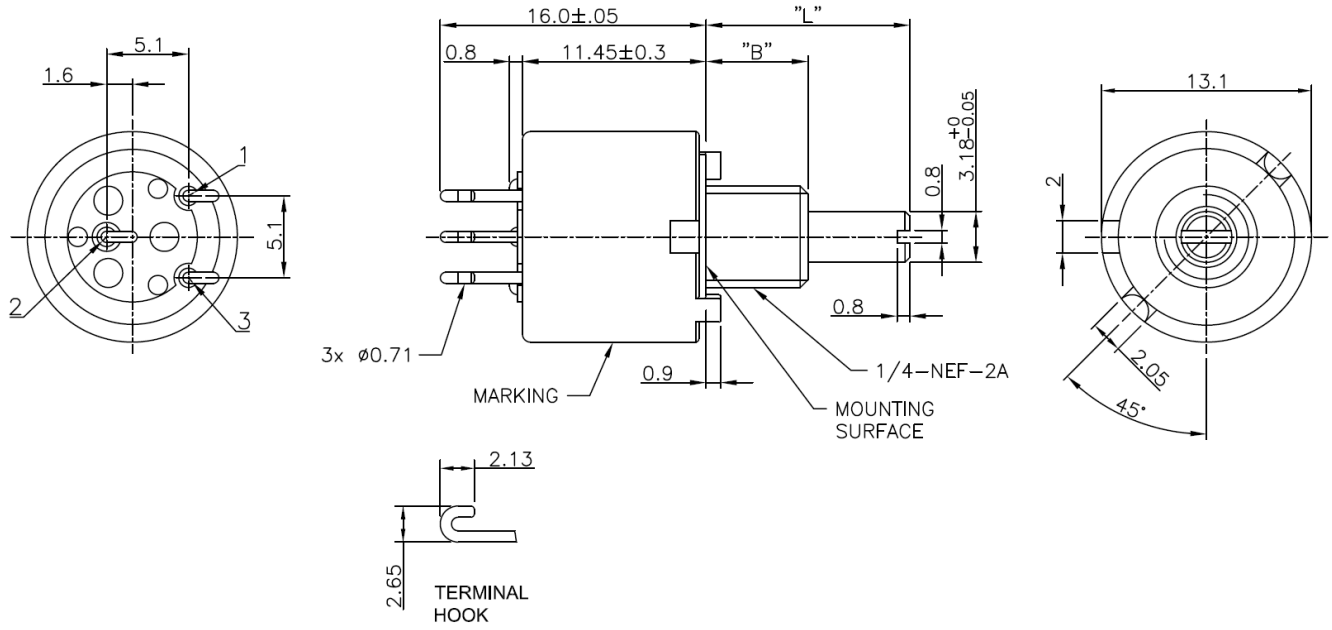

General Note
TT Electronics reserves the right to make changes in product specification without notice or liability. All information is subject to TT Electronics’ own data and is considered accurate at time of going to print.

© TT electronics plc

TT Electronics | BI Technologies
413 Rood RD, Suite 7
Calexico, CA 92231
Ph: + 1 (714) 447-2345
www.ttelectronics.com