Mini Family
375V Input



Actual size:
2.28 x 2.2 x 0.5in
[57,9 x 55,9 x 12,7mm]

DC-DC Converter Module

Features & Benefits

- DC input range: 250 – 425V
- Isolated output
- Input surge withstand: 500V for 100ms
- DC output: 2 – 48V
- Programmable output: 10 – 110%
- Regulation: ±0.3% no load to full load
- Efficiency: Up to 89%
- Maximum operating temp: 100°C, full load
- Power density: up to 120W per cubic inch
- Height above board: 0.43in [10,9mm]
- Parallelable, with N+M fault tolerance
- Low-noise ZCS/ZVS architecture
- RoHS Compliant (with F or G pin option)

Product Overview

These DC-DC converter modules use advanced power processing, control and packaging technologies to provide the performance, flexibility, reliability and cost effectiveness of a mature power component.

High-frequency ZCS/ZVS switching provides high power density with low noise and high efficiency.

Applications

Off-line systems with auto-ranging or PFC front ends, industrial and process control, distributed power, medical, ATE, communications, defense and aerospace.

For details on proper operation please refer to the:
Design Guide & Applications Manual for Maxi, Mini, Micro Family.

Absolute Maximum Ratings

Parameter	Rating	Unit	Notes
+IN to –IN voltage	–0.5 to +525	V_{DC}	
PC to –IN voltage	–0.5 to +7.0	V_{DC}	
PR to –IN voltage	–0.5 to +7.0	V_{DC}	
SC to –OUT voltage	–0.5 to +1.5	V_{DC}	
–Sense to –OUT voltage	1.0	V_{DC}	
Isolation voltage			
IN to OUT	3000	V_{RMS}	Test voltage
IN to base	1500	V_{RMS}	Test voltage
OUT to base	500	V_{RMS}	Test voltage
Operating Temperature	–55 to +100	°C	M-Grade
Storage Temperature	–65 to +125	°C	M-Grade
Pin soldering temperature	500 [260]	°F [°C]	<5sec; wave solder
	750 [390]	°F [°C]	<7sec; hand solder
Mounting torque	5 [0.57]	in·lbs [N·m]	6 each

Part Numbering

e.g. V375B12T300BL2

375B **B**

Product Type
V = *Standard*
S = *Enhanced efficiency (avail. ≤12 V_{OUT} only)*

Output Voltage
2 = *2V*
3V3 = *3.3V*
5 = *5V*
8 = *8V*
12 = *12V*
15 = *15V*
24 = *24V*
28 = *28V*
36 = *36V*
48 = *48V*

Product Grade Temperatures (°C)

Grade		Operating	Storage
E	=	–10 to +100	–20 to +125
C	=	–20 to +100	–40 to +125
T	=	–40 to +100	–40 to +125
H	=	–40 to +100	–55 to +125
M	=	–55 to +100	–65 to +125

Output Power

V_{OUT}	P_{OUT}
2V	**100W**
3.3V	**100W, 150W**
5V	**150W, 200W**
8V	**200W**
12V	**200W, 300W**
15V	**200W, 300W**
24V	**200W, 300W**
28V	**200W, 300W**
36V	**200W, 300W**
48V	**200W, 300W**

Pin Style
Blank: *Short*
L: *Long*
S: *Short ModuMate*
N: *Long ModuMate*
F: *Short RoHS*
G: *Long RoHS*
K: *Extra Long RoHS*

Finish
Tin/Lead
Tin/Lead
Gold
Gold
Gold
Gold
Gold

Baseplate
Blank: *Slotted*
2: *Threaded*
3: *Through-hole*

Note: Product images may not highlight current product markings.

Module Family Electrical Characteristics

Electrical characteristics apply over the full operating range of input voltage, output load (resistive) and baseplate temperature, unless otherwise specified. All temperatures refer to the operating temperature at the center of the baseplate.

Module Input Specifications

Parameter	Min	Typ	Max	Unit	Notes
Operating input voltage	250	375	425	V_{DC}	
Input surge withstand			500	V_{DC}	<100ms
Undervoltage turn–on		242.5	247.5	V_{DC}	
Undervoltage turn–off	204.7	212.2		V_{DC}	
Overvoltage turn–off/on	429.2	446.3	467.5	V_{DC}	
Disabled input current			1.1	mA	PC pin low

Module Output Specifications

Parameter	Min	Typ	Max	Unit	Notes
Output voltage set point			±1	%	Of nominal output voltage. Nominal input; full load; 25°C
Line regulation		±0.02	±0.20	%	Low line to high line; full load
Temperature regulation		±0.002	±0.005	% / °C	Over operating temperature range
Power sharing accuracy		±2	±5	%	10 – 100% of full load
Programming range	10		110	%	Of nominal output voltage. For trimming below 90% of nominal, a minimum load of 10% of maximum rated power may be required.
+OUT to –OUT, +Sense to –OUT — Absolute Maximum Ratings					
2V			–0.5 to 3.1	V_{DC}	Externally applied
3.3V			–0.5 to 4.7	V_{DC}	Externally applied
5V			–0.5 to 7.0	V_{DC}	Externally applied
8V			–0.5 to 10.9	V_{DC}	Externally applied
12V			–0.5 to 16.1	V_{DC}	Externally applied
15V			–0.5 to 20.0	V_{DC}	Externally applied
24V			–0.5 to 31.7	V_{DC}	Externally applied
28V			–0.5 to 36.9	V_{DC}	Externally applied
36V			–0.5 to 47.1	V_{DC}	Externally applied
48V			–0.5 to 62.9	V_{DC}	Externally applied

Note: The permissible load current must never be exceeded during normal, abnormal or test conditions. For additional output related application information, please refer to output connections on page 9.

Thermal Resistance and Capacity

Parameter	Min	Typ	Max	Unit
Baseplate to sink; flat, greased surface		0.16		°C/Watt
Baseplate to sink; thermal pad (P/N 20264)		0.14		°C/Watt
Baseplate to ambient		8.0		°C/Watt
Baseplate to ambient; 1000LFM		1.9		°C/Watt
Thermal capacity		83		Watt-sec/°C

Module Family Electrical Characteristics (Cont.)

Module Control Specifications

Parameter	Min	Typ	Max	Unit	Notes
Primary Side (PC = Primary Control; PR = Parallel)					
PC bias voltage current limit	5.50 1.5	5.75 2.1	6.00 3.0	V_{DC} mA	PC current = 1.0mA PC voltage = 5.5V During normal operation
PC module disable	2.3	2.6	2.9	V_{DC}	Switch must be able to sink ≥4mA. See Figure 2
PC module enable delay		4	7	ms	
PC module alarm			0.5	V_{AVG}	UV, OV, OT, module fault. See Figures 3 and 5
PC resistance	0.9	1.0	1.1	MΩ	See Figure 3, converter off or fault mode
PR emitter amplitude	5.7	5.9	6.1	Volts	PR load >30Ω, <30pF
PR emitter current	150			mA	
PR receiver impedance	375	500	625	Ω	25°C
PR receiver threshold	2.4	2.5	2.6	Volts	Minimum pulse width: 20ns
PR drive capability			12	modules	Without PR buffer amplifier
Secondary Side (SC = Secondary Control)					
SC bandgap voltage	1.21	1.23	1.25	V_{DC}	Referenced to –Sense
SC resistance	990	1000	1010	Ω	
SC capacitance		0.033		µF	
SC module alarm		0		V_{DC}	With open trim; referenced to –Sense. See Figure 7

Module General Specifications

Parameter	Min	Typ	Max	Unit	Notes
Remote sense (total drop)			0.5	V_{DC}	0.25V per leg (sense leads must be connected to respective, output terminals)
Isolation test voltage (IN to OUT)*	3000			V_{RMS}	Complies with reinforced insulation requirements
Isolation test voltage (IN to base)*	1500			V_{RMS}	Complies with basic insulation requirements
Isolation test voltage (OUT to base)*	500			V_{RMS}	Complies with operational insulation requirements
Isolation resistance		10		MΩ	IN to OUT, IN to baseplate, OUT to baseplate
Weight (E, C, T grade)	3.1 [89.3]	3.5 [100.3]	3.9 [111.3]	ounces [grams]	
Weight (H, M grade)	3.5 [99.6]	3.9 [110.6]	4.3 [121.6]	ounces [grams]	
Temperature limiting	100	115		°C	See Figures 3 and 5. Do not operate coverter >100°C.
Agency approvals		cURus, cTÜVus, CE			UL60950-1, EN60950-1, CSA60950-1, IEC60950-1. With appropriate fuse in series with the +Input

* Isolation test voltage, 1 minute or less.

Note: Specifications are subject to change without notice.

Module-Specific Operating Specifications

2V_{OUT}, 100W (e.g. S375B2C100BL, V375B2C100BL)

Parameter	Min	Typ	Max	Unit	Notes
Efficiency					
S375B2C100BL (enhanced efficiency)	79.0	83.0		%	Nominal input; 75% load; 25°C
V375B2C100BL (standard efficiency)	73.6	74.6			
Ripple and noise		100	125	mV	P-P; Nominal input; full load; 20 MHz bandwidth
Output OVP set point	2.7	2.8	2.9	Volts	25°C; recycle input voltage or PC to restart (>100ms off)
Dissipation, standby		5.1	5.3	Watts	No load
Load regulation		±0.02	±0.3	%	No load to full load; nominal input
Load current	0		50	Amps	
Current limit	51	57.5	70	Amps	Output voltage 95% of nominal
Short circuit current	35	57.5	70	Amps	Output voltage <250mV

3.3V_{OUT}, 150W (e.g. S375B3V3C150BL, V375B3V3C150BL)

Parameter	Min	Typ	Max	Unit	Notes
Efficiency					
S375B3V3C150BL (enhanced efficiency)	82.0	85.0		%	Nominal input; 75% load; 25°C
V375B3V3C150BL (standard efficiency)	79.0	80.3			
Ripple and noise		100	125	mV	P-P; Nominal input; full load; 20MHz bandwidth
Output OVP set point	4.14	4.3	4.46	Volts	25°C; recycle input voltage or PC to restart (>100ms off)
Dissipation, standby		5.1	7.7	Watts	No load
Load regulation		±0.02	±0.2	%	No load to full load; nominal input
Load current	0		45.45	Amps	
Current limit	45.5	53.8	63.7	Amps	Output voltage 95% of nominal
Short circuit current	31.8	54.5	63.7	Amps	Output voltage <250mV

3.3V_{OUT}, 100W (e.g. S375B3V3C100BL, V375B3V3C100BL)

Parameter	Min	Typ	Max	Unit	Notes
Efficiency					
S375B3V3C100BL (enhanced efficiency)	82.0	85.0		%	Nominal input; 75% load; 25°C
V375B3V3C100BL (standard efficiency)	79.0	80.1			
Ripple and noise		108	135	mV	P-P; Nominal input; full load; 20MHz bandwidth
Output OVP set point	4.14	4.3	4.46	Volts	25°C; recycle input voltage or PC to restart (>100ms off)
Dissipation, standby		3.8	5.5	Watts	No load
Load regulation		±0.02	±0.2	%	No load to full load; nominal input
Load current	0		30.3	Amps	
Current limit	30.9	34.8	41	Amps	Output voltage 95% of nominal
Short circuit current	17.4	34.8	41	Amps	Output voltage <250mV

5V_{OUT}, 200W (e.g. S375B5C200BL, V375B5C200BL)

Parameter	Min	Typ	Max	Unit	Notes
Efficiency					
S375B5C200BL (enhanced efficiency)	82.0	83.0		%	Nominal input; 75% load; 25°C
V375B5C200BL (standard efficiency)					
Ripple and noise		201	251	mV	P-P; Nominal input; full load; 20MHz bandwidth
Output OVP set point	6.03	6.25	6.47	Volts	25°C; recycle input voltage or PC to restart (>100ms off)
Dissipation, standby		5.4	8.1	Watts	No load
Load regulation		±0.02	±0.2	%	No load to full load; nominal input
Load current	0		40	Amps	
Current limit	40.8	46	52	Amps	Output voltage 95% of nominal
Short circuit current	28	46	52	Amps	Output voltage <250mV

Module-Specific Operating Specifications (Cont.)

$5V_{OUT}$, 150W (e.g. S375B5C150BL, V375B5C150BL)

Parameter	Min	Typ	Max	Unit	Notes
Efficiency					
S375B5C150BL (enhanced efficiency)	83.0	85.0		%	Nominal input; 75% load; 25°C
V375B5C150BL (standard efficiency)	82	83.4			
Ripple and noise		169	211	mV	P-P; Nominal input; full load; 20MHz bandwidth
Output OVP set point	6.03	6.25	6.47	Volts	25°C; recycle input voltage or PC to restart (>100ms off)
Dissipation, standby		5.5	6.5	Watts	No load
Load regulation		±0.02	±0.2	%	No load to full load; nominal input
Load current	0		30	Amps	
Current limit	30.6	34.5	40.5	Amps	Output voltage 95% of nominal
Short circuit current	21	34.5	40.5	Amps	Output voltage <250mV

$8V_{OUT}$, 200W (e.g. S375B8C200BL, V375B8C200BL)

Parameter	Min	Typ	Max	Unit	Notes
Efficiency					
S375B8C200BL (enhanced efficiency)	84.0	87.0		%	Nominal input; 75% load; 25°C
V375B8C200BL (standard efficiency)	83	84.2			
Ripple and noise		320	400	mV	P-P; Nominal input; full load; 20MHz bandwidth
Output OVP set point	9.36	9.7	10.1	Volts	25°C; recycle input voltage or PC to restart (>100ms off)
Dissipation, standby		6	6.9	Watts	No load
Load regulation		±0.02	±0.2	%	No load to full load; nominal input
Load current	0		25	Amps	
Current limit	25.5	28.8	33.8	Amps	Output voltage 95% of nominal
Short circuit current	17.5	28.8	33.8	Amps	Output voltage <250mV

$12V_{OUT}$, 300W (e.g. S375B12C300BL, V375B12C300BL)

Parameter	Min	Typ	Max	Unit	Notes
Efficiency					
S375B12C300BL (enhanced efficiency)	86.0	89.0		%	Nominal input; 75% load; 25°C
V375B12C300BL (standard efficiency)	85.5	86.7			
Ripple and noise		280	360	mV	P-P; Nominal input; full load; 20MHz bandwidth
Output OVP set point	13.7	14.3	14.9	Volts	25°C; recycle input voltage or PC to restart (>100ms off)
Dissipation, standby		6	9	Watts	No load
Load regulation		±0.02	±0.3	%	No load to full load; nominal input
Load current	0		25	Amps	
Current limit	25.5	28.8	35	Amps	Output voltage 95% of nominal
Short circuit current	17.5	28.8	35	Amps	Output voltage <250mV

$12V_{OUT}$, 200W (e.g. S375B12C200BL , V375B12C200BL)

Parameter	Min	Typ	Max	Unit	Notes
Efficiency					
S375B12C200BL (enhanced efficiency)	85.2	86.7		%	Nominal input; 75% load; 25°C
V375B12C200BL (standard efficiency)	84.5	85.8			
Ripple and noise		258	323	mV	P-P; Nominal input; full load; 20MHz bandwidth
Output OVP set point	13.7	14.3	14.9	Volts	25°C; recycle input voltage or PC to restart (>100ms off)
Dissipation, standby		8.5	10	Watts	No load
Load regulation		±0.02	±0.2	%	No load to full load; nominal input
Load current	0		16.67	Amps	
Current limit	17	19.2	22.6	Amps	Output voltage 95% of nominal
Short circuit current	11.6	19.2	22.6	Amps	Output voltage <250mV

Module-Specific Operating Specifications (Cont.)

$15V_{OUT}$, 300W (e.g. V375B15C300BL)

Parameter	Min	Typ	Max	Unit	Notes
Efficiency	86.0	87.2		%	Nominal input; 75% load; 25°C
Ripple and noise		265	335	mV	P-P; Nominal input; full load; 20MHz bandwidth
Output OVP set point	17.1	17.8	18.5	Volts	25°C; recycle input voltage or PC to restart (>100ms off)
Dissipation, standby		5.6	8.4	Watts	No load
Load regulation		±0.02	±0.3	%	No load to full load; nominal input
Load current	0		20	Amps	
Current limit	20.4	23	26	Amps	Output voltage 95% of nominal
Short circuit current	14	23	26	Amps	Output voltage <250mV

$15V_{OUT}$, 200W (e.g. V375B15C200BL)

Parameter	Min	Typ	Max	Unit	Notes
Efficiency	86.5	87.6		%	Nominal input; 75% load; 25°C
Ripple and noise		222	278	mV	P-P; Nominal input; full load; 20MHz bandwidth
Output OVP set point	17.1	17.8	18.5	Volts	25°C; recycle input voltage or PC to restart (>100ms off)
Dissipation, standby		7.7	9	Watts	No load
Load regulation		±0.02	±0.2	%	No load to full load; nominal input
Load current	0		13.33	Amps	
Current limit	13.5	15.3	18	Amps	Output voltage 95% of nominal
Short circuit current	9.31	15.3	18	Amps	Output voltage <250mV

$24V_{OUT}$, 300W (e.g. V375B24C300BL)

Parameter	Min	Typ	Max	Unit	Notes
Efficiency	86.5	88		%	Nominal input; 75% load; 25°C
Ripple and noise		494	618	mV	P-P; Nominal input; full load; 20MHz bandwidth
Output OVP set point	27.1	28.1	29.1	Volts	25°C; recycle input voltage or PC to restart (>100ms off)
Dissipation, standby		4.5	6.8	Watts	No load
Load regulation		±0.02	±0.3	%	No load to full load; nominal input
Load current	0		12.5	Amps	
Current limit	12.7	14.4	16.9	Amps	Output voltage 95% of nominal
Short circuit current	8.75	14.4	17.8	Amps	Output voltage <250mV

$24V_{OUT}$, 200W (e.g. V375B24C200BL)

Parameter	Min	Typ	Max	Unit	Notes
Efficiency	86	86.8		%	Nominal input; 75% load; 25°C
Ripple and noise		240	300	mV	P-P; Nominal input; full load; 20MHz bandwidth
Output OVP set point	27.1	28.1	29.1	Volts	25°C; recycle input voltage or PC to restart (>100ms off)
Dissipation, standby		6.8	7.2	Watts	No load
Load regulation		±0.02	±0.2	%	No load to full load; nominal input
Load current	0		8.33	Amps	
Current limit	8.49	9.58	11.3	Amps	Output voltage 95% of nominal
Short circuit current	5.83	9.58	11.3	Amps	Output voltage <250mV

Module-Specific Operating Specifications (Cont.)

$28V_{OUT}$, 300W (e.g. V375B28C300BL)

Parameter	Min	Typ	Max	Unit	Notes
Efficiency	87.5	88.5		%	Nominal input; 75% load; 25°C
Ripple and noise		420	525	mV	P-P; Nominal input; full load; 20MHz bandwidth
Output OVP set point	31.5	32.7	33.9	Volts	25°C; recycle input voltage or PC to restart (>100ms off)
Dissipation, standby		5.5	8.2	Watts	No load
Load regulation		±0.02	±0.2	%	No load to full load; nominal input
Load current	0		10.71	Amps	
Current limit	11	12.4	14.1	Amps	Output voltage 95% of nominal
Short circuit current	7.56	12.4	14.1	Amps	Output voltage <250mV

$28V_{OUT}$, 200W (e.g. V375B28C200BL)

Parameter	Min	Typ	Max	Unit	Notes
Efficiency	86.6	87.5		%	Nominal input; 75% load; 25°C
Ripple and noise		100	125	mV	P-P; Nominal input; full load; 20MHz bandwidth
Output OVP set point	31.5	32.7	33.9	Volts	25°C; recycle input voltage or PC to restart (>100ms off)
Dissipation, standby		6.6	10.6	Watts	No load
Load regulation		±0.02	±0.2	%	No load to full load; nominal input
Load current	0		7.14	Amps	
Current limit	7.28	8.21	9.64	Amps	Output voltage 95% of nominal
Short circuit current	4.99	8.21	9.64	Amps	Output voltage <250mV

$36V_{OUT}$, 300W (e.g. V375B36C300BL)

Parameter	Min	Typ	Max	Unit	Notes
Efficiency	86	86.9		%	Nominal input; 75% load; 25°C
Ripple and noise		540	675	mV	P-P; Nominal input; full load; 20MHz bandwidth
Output OVP set point	40.4	41.9	43.4	Volts	25°C; recycle input voltage or PC to restart (>100ms off)
Dissipation, standby		6.9	12.1	Watts	No load
Load regulation		±0.02	±0.2	%	No load to full load; nominal input
Load current	0		8.33	Amps	
Current limit	8.49	9.58	11.3	Amps	Output voltage 95% of nominal
Short circuit current	5.83	9.58	11.3	Amps	Output voltage <250mV

$36V_{OUT}$, 200W (e.g. V375B36C200BL)

Parameter	Min	Typ	Max	Unit	Notes
Efficiency	86.5	87.5		%	Nominal input; 75% load; 25°C
Ripple and noise		166	208	mV	P-P; Nominal input; full load; 20MHz bandwidth
Output OVP set point	40.4	41.9	43.4	Volts	25°C; recycle input voltage or PC to restart (>100ms off)
Dissipation, standby		6.4	6.7	Watts	No load
Load regulation		±0.02	±0.2	%	No load to full load; nominal input
Load current	0		5.55	Amps	
Current limit	5.67	6.39	7.51	Amps	Output voltage 95% of nominal
Short circuit current	3.89	6.39	7.51	Amps	Output voltage <250mV

Module-Specific Operating Specifications (Cont.)

$48V_{OUT}$, 300W (e.g. V375B48C300BL)

Parameter	Min	Typ	Max	Unit	Notes
Efficiency	86	89		%	Nominal input; 75% load; 25°C
Ripple and noise		170	213	mV	P-P; Nominal input; full load; 20MHz bandwidth
Output OVP set point	53.7	55.7	57.7	Volts	25°C; recycle input voltage or PC to restart (>100ms off)
Dissipation, standby		5.2	7.8	Watts	No load
Load regulation		±0.02	±0.2	%	No load to full load; nominal input
Load current	0		6.25	Amps	
Current limit	6.37	7.19	8.13	Amps	Output voltage 95% of nominal
Short circuit current	4.37	7.19	8.13	Amps	Output voltage <250mV

$48V_{OUT}$, 200W (e.g. V375B48C200BL)

Parameter	Min	Typ	Max	Unit	Notes
Efficiency	87	88.4		%	Nominal input; 75% load; 25°C
Ripple and noise		220	275	mV	P-P; Nominal input; full load; 20MHz bandwidth
Output OVP set point	53.7	55.7	57.7	Volts	25°C; recycle input voltage or PC to restart (>100ms off)
Dissipation, standby		8.3	9.1	Watts	No load
Load regulation		±0.02	±0.2	%	No load to full load; nominal input
Load current	0		4.17	Amps	
Current limit	4.25	4.8	5.63	Amps	Output voltage 95% of nominal
Short circuit current	2.91	4.8	5.63	Amps	Output voltage <250mV

Basic Module Operation

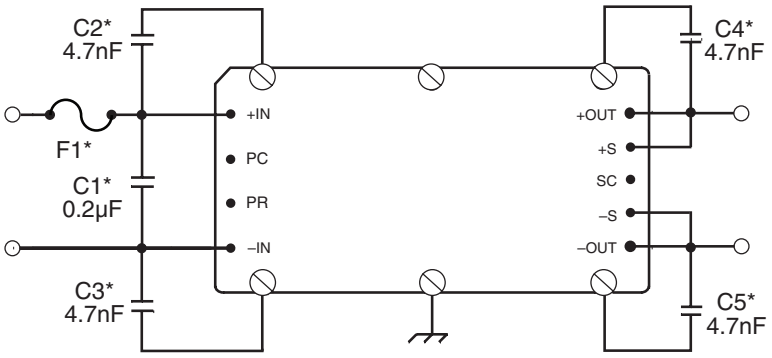

For C1 – C5, keep leads and connections short.

Figure 1 — *Basic module operation requires fusing, grounding, bypassing capacitors.* See Maxi, Mini, Micro Design Guide.*

Output Connections and Considerations

The permissible load current must never be exceeded during normal, abnormal or test conditions. Converters subject to dynamic loading exceeding 25% of rated current must be reviewed by Vicor Applications Engineering to ensure that the converter will operate properly.

Under dynamic-load, light-load or no-load conditions, the converter may emit audible noise. Converters that utilize remote sense may require compensation circuitry to offset the phase lag caused by the external output leads and load impedance. Remote-Sense leads must be protected for conditions such as lead reversal, noise pickup, open circuit or excessive output lead resistance between the sense point and the converters output terminals. For applications that may draw more than the rated current, a fast-acting electronic circuit breaker must be utilized to protect the converter. Under no circumstance should the rated current be exceeded. Utilizing or testing of current limit or short-circuit current will damage the converter. Ensure that the total output capacitance connected to the converter does not exceed the limits on Page 16, "Maximum Output Capacitance", of the design guide.

Comprehensive Online Application Information



The Design Guide and Applications Manual includes:

- Application circuits
- Design requirements
- EMC considerations
- Current sharing in power arrays
- Thermal performance information
- Recommended soldering methods
- Accessory modules – filtering, rectification, front-ends
- Mounting options
- ...and more.

CLICK HERE TO VIEW DESIGN GUIDE

Also at vicorpower.com

- PowerBench online configurators
- Over 20 Application Notes
- Online calculators – thermal, trimming, hold-up
- PDF data sheets for ALL Vicor products

Primary Control – PC Pin

Module Enable/Disable

The module may be disabled by pulling PC to 0V (2.3V max) with respect to the –Input. This may be done with an open collector transistor, relay or optocoupler. Converters may be disabled with a single transistor or relay either directly or via "OR'ing" diodes for two or more converters. See Figure 2.

Primary Auxiliary Supply

During normal operation only, the PC Pin can source 5.7V @ 1.5mA. In the example shown in Figure 4, PC powers a module enabled LED.

Module Alarm

The module contains "watchdog" circuitry which monitors input voltage, operating temperature and internal operating parameters. In the event that any of these parameters are outside of their allowable operating range, the module will shut down and PC will go low. PC will periodically go high and the module will check to see if the fault (as an example, Input Undervoltage) has cleared. If the fault has not been cleared, PC will go low again and the cycle will restart. The SC pin will go low in the event of a fault and return to its normal state after the fault has been cleared. See Figures 3 and 5.

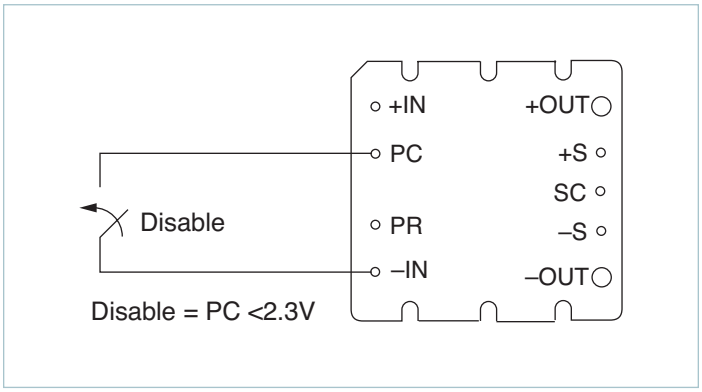

Figure 2 — *Module enable/disable*

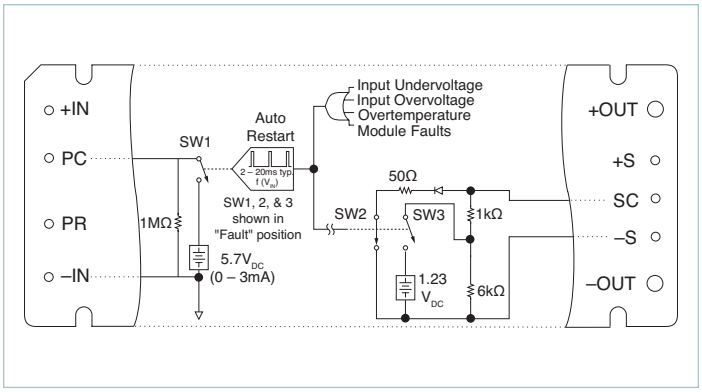

Figure 3 — *PC/SC module alarm logic*

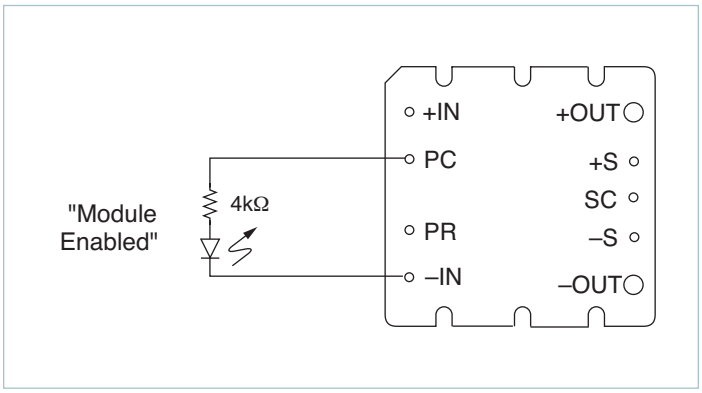

Figure 4 — *LED on-state indicator*

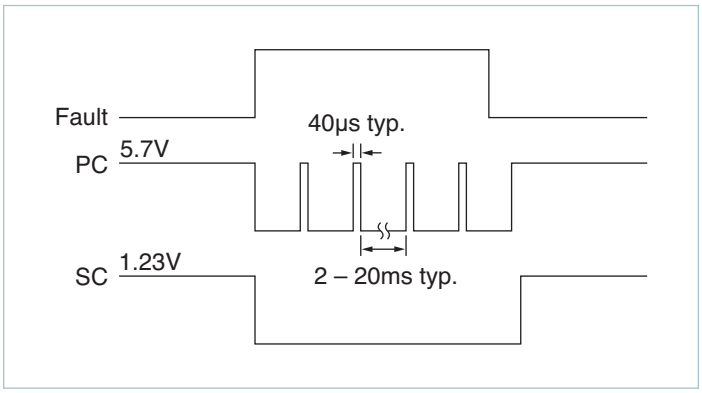

Figure 5 — *PC/SC module alarm timing*

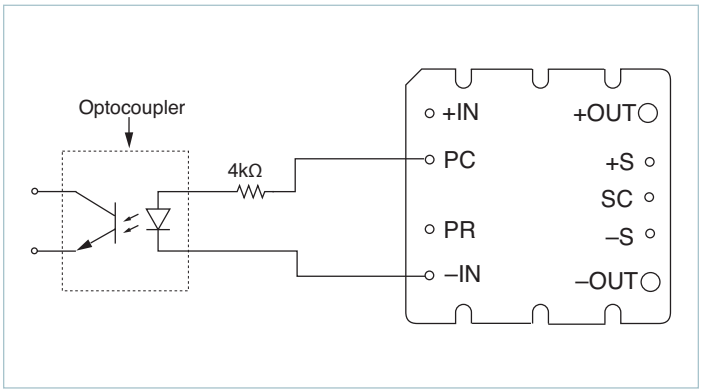

Figure 6 — *Isolated on-state indicator*

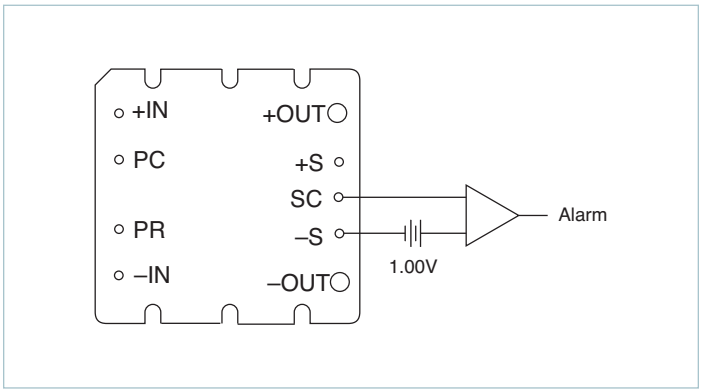

Figure 7 — *Secondary-side on-state indicator*

Secondary Control – SC Pin

Output Voltage Programming

The output voltage of the converter can be adjusted or programmed via fixed resistors, potentiometers or voltage DACs. See Figure 8.

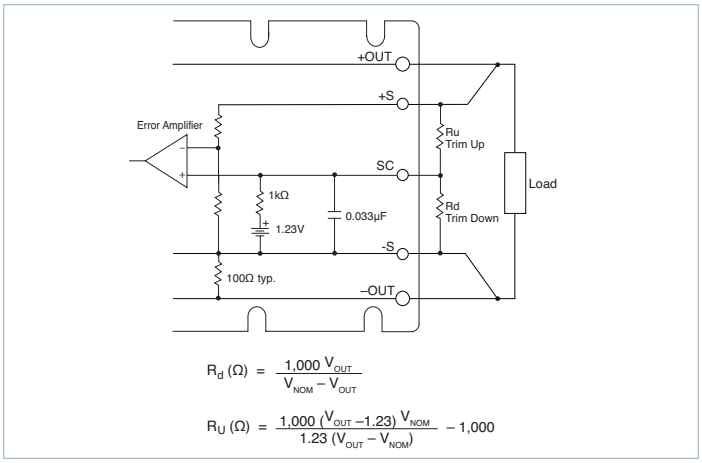

Figure 8 — *Output voltage trim-down and trim-up circuit*

Trim Down

1. This converter is not a constant-power device – it has a constant current limit. Hence, available output power is reduced by the same percentage that output voltage is trimmed down. Do not exceed maximum rated output current.
2. The trim-down resistor must be connected between the SC and –S pins. Do not bypass the SC pin directly with a capacitor.

Trim Up

1. The converter is rated for a maximum delivered power. To ensure that maximum rated power is not exceeded, reduce maximum output current by the same percentage increase in output voltage.
2. The trim-up resistor must be connected between the SC and +S pins. Do not bypass the SC pin directly with a capacitor.
3. Do not trim the converter above maximum trim range (typically +10%) or the output over voltage protection circuitry may be activated.

Trim resistor values calculated automatically:

On-line calculators for trim resistor values are available on the vicor website at:
asp.vicorpower.com/calculators/calculators.asp?calc=1
Resistor values can be calculated for fixed trim up, fixed trim down and for variable trim up or down.

Parallel Bus – PR Pin

Parallel Operation

The PR pin supports paralleling for increased power with N+1 (N+M) redundancy. Modules of the same input voltage, output voltage and power level will current share if all PR pins are suitably interfaced.

Compatible interface architectures include the following:

AC-coupled single-wire interface. All PR pins are connected to a single communication bus through 0.001µF (500V) capacitors. This interface supports current sharing and is fault tolerant except for the communication bus. Up to three converters may be paralleled by this method. See Figure 9.

Transformer-coupled interface. For paralleling four or more converters a transformer-coupled interface is required, and under certain conditions a PR buffer circuit.

For details on parallel operation please refer to the Design Guide & Applications Manual for Maxi, Mini, Micro Family.

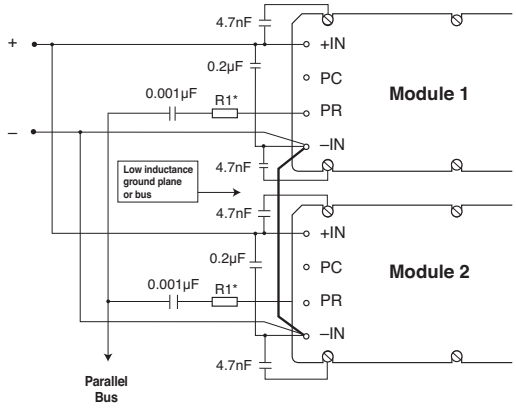

Figure 9 — *AC-coupled single-wire interface*
** See Maxi, Mini, Micro Design Guide*

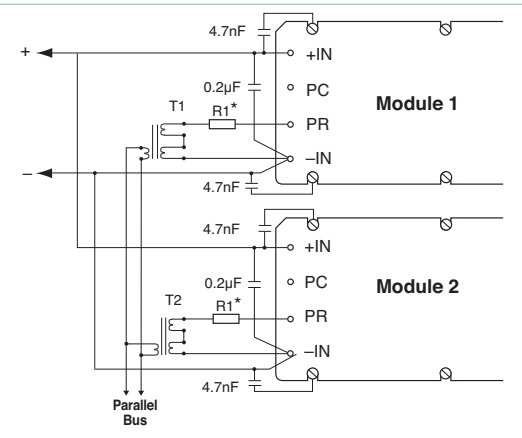

Figure 10 — *Transformer-coupled interface*

Number of Converters in Parallel	*R1 value Ω
2	75
3	50
4	33
5 or more	refer to application note: Designing High-Power Arrays using Maxi, Mini, Micro Family DC-DC Converters

Parallel Bus Output

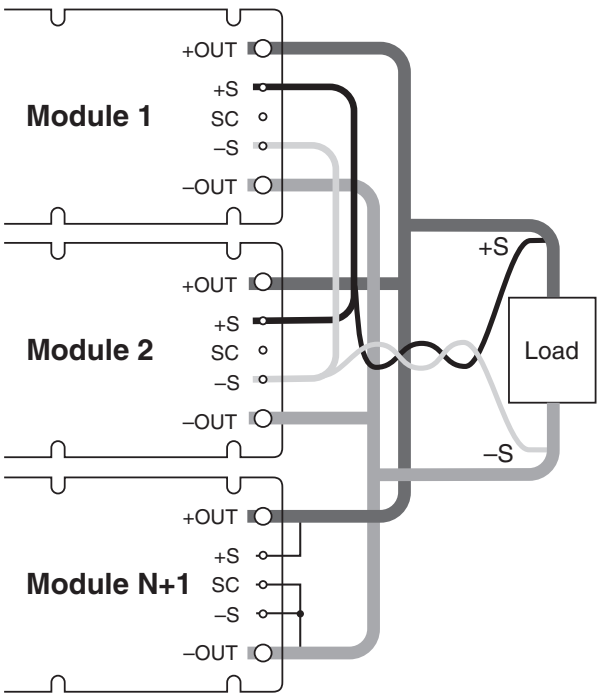

- The +OUT and –OUT power buses should be designed to minimize and balance parasitic impedance from each module output to the load.
- The +Sense pins must be tied together to form a +Sense bus. This must be Kelvin connected to +OUT at a single point. The –Sense pins should be tied together to form a –Sense bus. This must be Kelvin connected to –OUT at a single point.
- At the discretion of the power system designer, a subset of all modules within an array may be configured as slaves by connecting SC to –S.
- OR'ing diodes may be inserted in series with the +OUT pins of each module to provide module output fault tolerance.
- The +Sense and –Sense leads should be routed in close proximity to each other on the printed circuit board. If wires are used to connect the converters on a PCB to an external load, the Sense leads should be twisted together to reduce noise pickup.

Figure 11 — *N+1 module array output connections*

Pin Styles*

Designator	Description	Finish	Notes
(None)	Short	Tin/Lead	Requires inboard mounting
L	Long	Tin/Lead	Onboard mounting for 0.065in boards
S	Short ModuMate	Gold	SurfMate or inboard socket mounting
N	Long ModuMate	Gold	Onboard socket mounting
F	Short RoHS	Gold	Select for RoHS-compliant inboard solder, socket or SurfMate mounting
G	Long RoHS	Gold	Select for RoHS-compliant onboard solder or socket mounting
K	Extra Long RoHS	Gold	Select for RoHS compliance onboard mounting for thicker PCBs (not intended for socket or Surfmate mounting)

* Pin style designator follows the "B" after the output power and precedes the baseplate designator.
Ex. V375B12T200B**N**2 — Long ModuMate Pins

Storage

Vicor products, when not installed in customer units, should be stored in ESD safe packaging in accordance with ANSI/ESD S20.20, "Protection of Electrical and Electronic Parts, Assemblies and Equipment" and should be maintained in a temperature controlled factory/ warehouse environment not exposed to outside elements controlled between the temperature ranges of 15°C and 38°C. Humidity shall not be condensing, no minimum humidity when stored in an ESD compliant package.

Mechanical Drawings

Converter Pins		
No.	*Function*	*Label*
1	+IN	+
2	Primary Control	PC
3	Parallel	PR
4	–IN	–
5	–OUT	–
6	–Sense	–S
7	Secondary Control	SC
8	+Sense	+S
9	+OUT	+

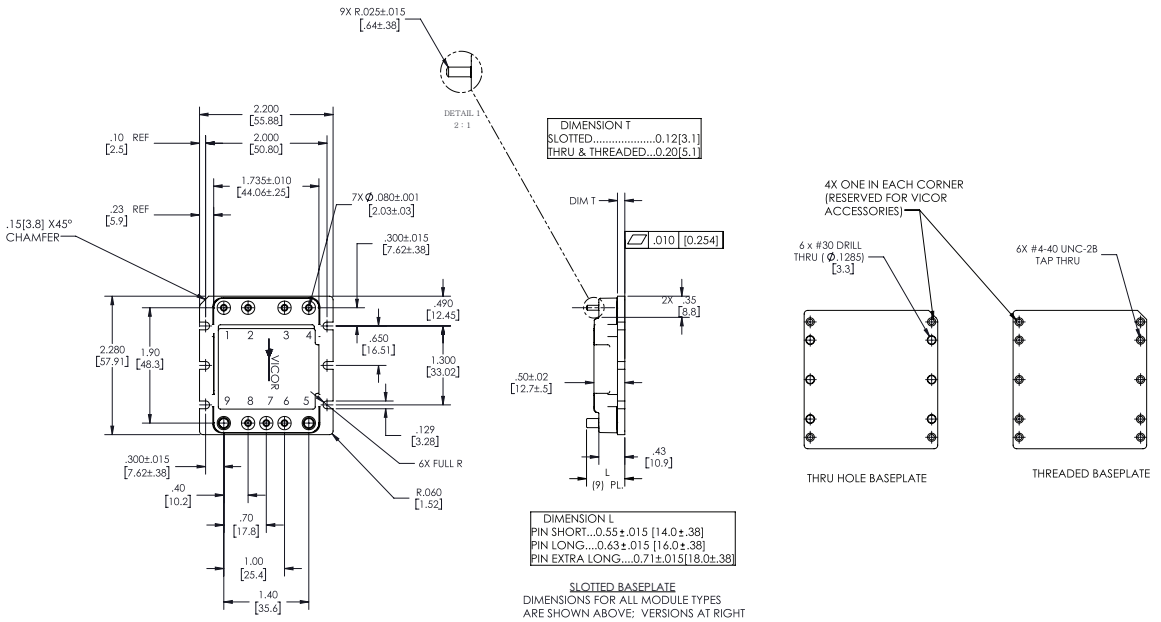

NOTES:
1. MATERIAL:
BASE: 6000 SERIES ALUMINUM
PIN PLATING: NICKEL BARRIER FOLLOWED BY
(RoHS PINS) GOLD PLATE (30 MICRO INCH MIN); OR PALLADIUM (35 UIN MIN), FOLLOWED BY 3 TO 5 UIN GOLD.
(NON-RoHS PINS) TIN/LEAD 90/10 BRIGHT
2. DIMENSIONS AND VALUES IN BRACKETS ARE METRIC
3. MANUFACTURING CONTROL IS IN PLACE TO ENSURE THAT THE SPACING BETWEEN THE MODULES LABEL SURFACE TO THE PRINTED CIRCUIT BOARD OF THE APPLICATION RANGES FROM DIRECT CONTACT (ZERO), TO THE MAXIMUM GAP AS CALCULATED FROM THE TOLERANCE STACK-UP AND IS NOT SUBJECT NEGATIVE TOLERANCE ACCUMULATION

Figure 12 — *Module outline*

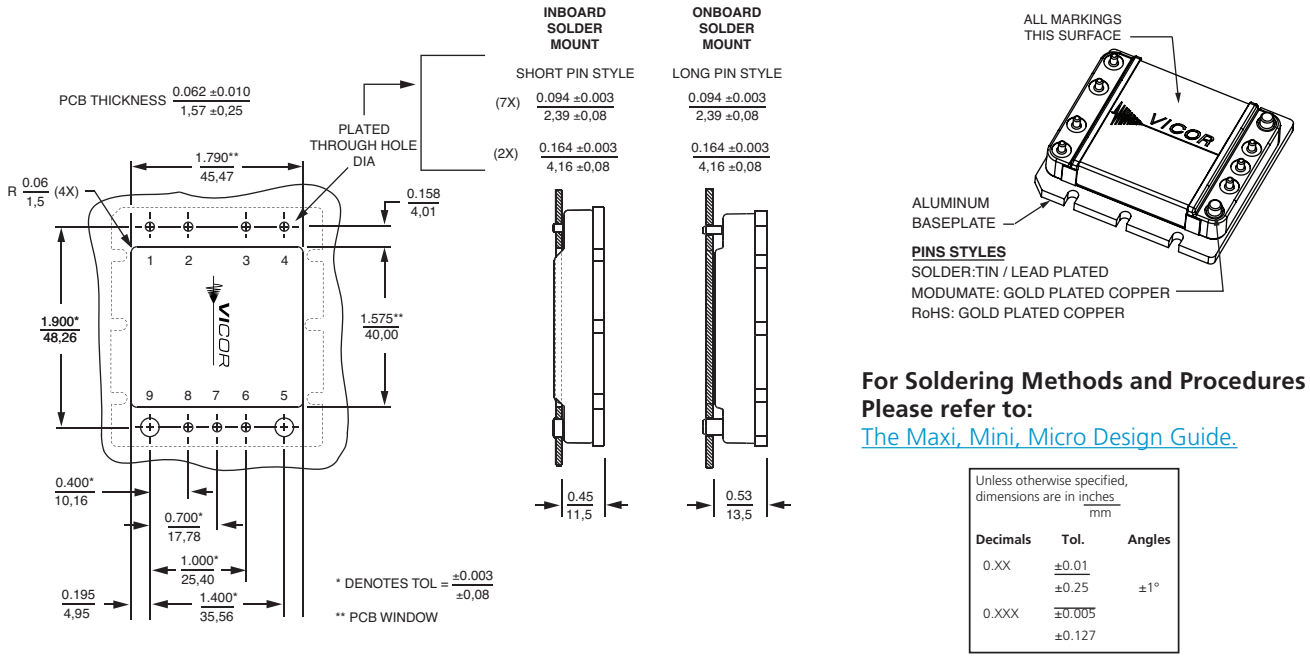

For Soldering Methods and Procedures Please refer to:
The Maxi, Mini, Micro Design Guide.

Unless otherwise specified, dimensions are in inches / mm		
Decimals	**Tol.**	**Angles**
0.XX	±0.01 ±0.25	±1°
0.XXX	±0.005 ±0.127	

Figure 13 — *PCB mounting specifications*

Vicor's comprehensive line of power solutions includes high density AC-DC and DC-DC modules and accessory components, fully configurable AC-DC and DC-DC power supplies, and complete custom power systems.

Information furnished by Vicor is believed to be accurate and reliable. However, no responsibility is assumed by Vicor for its use. Vicor makes no representations or warranties with respect to the accuracy or completeness of the contents of this publication. Vicor reserves the right to make changes to any products, specifications, and product descriptions at any time without notice. Information published by Vicor has been checked and is believed to be accurate at the time it was printed; however, Vicor assumes no responsibility for inaccuracies. Testing and other quality controls are used to the extent Vicor deems necessary to support Vicor's product warranty. Except where mandated by government requirements, testing of all parameters of each product is not necessarily performed.

Specifications are subject to change without notice.

Visit http://www.vicorpower.com/dc-dc-converters-board-mount/high-density-dc-dc-converters for the latest product information.

Vicor's Standard Terms and Conditions and Product Warranty

All sales are subject to Vicor's Standard Terms and Conditions of Sale, and Product Warranty which are available on Vicor's webpage (http://www.vicorpower.com/termsconditionswarranty) or upon request.

Life Support Policy

VICOR'S PRODUCTS ARE NOT AUTHORIZED FOR USE AS CRITICAL COMPONENTS IN LIFE SUPPORT DEVICES OR SYSTEMS WITHOUT THE EXPRESS PRIOR WRITTEN APPROVAL OF THE CHIEF EXECUTIVE OFFICER AND GENERAL COUNSEL OF VICOR CORPORATION. As used herein, life support devices or systems are devices which (a) are intended for surgical implant into the body, or (b) support or sustain life and whose failure to perform when properly used in accordance with instructions for use provided in the labeling can be reasonably expected to result in a significant injury to the user. A critical component is any component in a life support device or system whose failure to perform can be reasonably expected to cause the failure of the life support device or system or to affect its safety or effectiveness. Per Vicor Terms and Conditions of Sale, the user of Vicor products and components in life support applications assumes all risks of such use and indemnifies Vicor against all liability and damages.

Intellectual Property Notice

Vicor and its subsidiaries own Intellectual Property (including issued U.S. and Foreign Patents and pending patent applications) relating to the products described in this data sheet. No license, whether express, implied, or arising by estoppel or otherwise, to any intellectual property rights is granted by this document. Interested parties should contact Vicor's Intellectual Property Department.

Contact Us: http://www.vicorpower.com/contact-us

Vicor Corporation
25 Frontage Road
Andover, MA, USA 01810
Tel: 800-735-6200
Fax: 978-475-6715
www.vicorpower.com

email
Customer Service: custserv@vicorpower.com
Technical Support: apps@vicorpower.com

©2018 – 2019 Vicor Corporation. All rights reserved. The Vicor name is a registered trademark of Vicor Corporation.
All other trademarks, product names, logos and brands are property of their respective owners.