Half Brick, DC-DC Converters

VI-J00
VE-J00



25 to 100 Watts

Features & Benefits

- Isolated output
- Up to 50W/in^3
- cURus, cTÜVus
- CE Marked
- Up to 90% efficiency
- Size: 2.28" x 2.4" x 0.5" (57,9 x 61,0 x 12,7mm)
- Remote sense and current limit
- Logic disable
- Wide range output adjust
- ZCS power architecture
- Low noise FM control
- RoHS compliant (VE verisons)

Product Highlights

The VI-J00 MiniMod family established a new standard in component-level DC-DC converters. This "junior" size complement to the higher power VI-200 family offers up to 100W of isolated and regulated power in a board mounted package. With thousands of input/output/power combinations, and with a maximum operating temperature rating of 100°C, the MiniMod provides nearly unlimited flexibiliy for power system designers to meet demanding time to market requirements.

Utilizing Vicor's "zero-current-switching" forward converter technology, proven by an installed base of over 8 million units, the MiniMod family combines state of the art power density with the efficiency, low noise and reliability required by next generation power systems.

Part Numbering

VI – J 6 1 – C W

Family
VI=Non-RoHS
VE = RoHS

Series
J = J00

Input

0 = 12V	**N** = 48V
V = 24V	**4** = 72V
1 = 24V	**T** = 110V
W = 24V	**5** = 150V
2 = 36V	**6** = 300V
3 = 48V	**7** = 150/300V

Output

Z = 2V	**M** = 10V	**K** = 40V
Y = 3.3V	**1** = 12V	**4** = 48V
0 = 5V	**P** = 13.8V	**H** = 52V
X = 5.2V	**2** = 15V	**F** = 72V
W = 5.5V	**N** = 18.5V	**D** = 85V
V = 5.8V	**3** = 24V	**B** = 95V
T = 6.5V	**L** = 28V	
R = 7.5V	**J** = 36V	

Grade

E = –10 to 100°C	
C = –25 to 100°C	
I = –40 to 100°C	
M = –55 to 100°C	

Power

≥ 5V	**< 5V**
W = 100W	**W** = 20A
X = 75W	**X** = 15A
Y = 50W	**Y** = 10A
Z = 25W	**Z** = 5A

Note: For additional packaging options, please see page 5.

Maximum Power Available for VI-Jxx-xx

Input				Output																						
Voltage Nom. (Range)	Low Line 75% Max Power	Transient[a]	V_{IN} Designators	V_{OUT} Designators																						
				2	3.3	5	5.2	5.5	5.8	6.5	7.5	10	12	13.8	15	18.5	24	28	36	40	48	52	72	85	95
				Z	Y	0	X	W	V	T	R	M	1	P	2	N	3	L	J	K	4	H	F	D	B
12 (10 – 20)	n/a	22	**0**	X	X	Y	Y	Y	Y	Y	Y	X	X	X	X	X	X	X	X	X	X	X	X	X	X
24 (10 – 36)	n/a	n/a	**V**	--	Y	Y	Y	Y	Y	Y	Y	Y	Y	Y	Y	Y	Y	Y	Y	Y	Y	--	--	--	--
24 (21 – 32)	18	36	**1**	W	W	W	W	W	W	X	X	W	W	W	W	W	W	W	W	W	W	W	W	W	W
24 (18 – 36)	n/a	n/a	**W**	W	W	W	W	W	W	X	X	W	W	W	W	W	W	W	W	W	W	W	W	W	W
36 (21 – 56)	18	60	**2**	Y	Y	Y	Y	Y	Y	Y	Y	X	X	X	X	X	X	X	X	X	X	X	--	--	--
48 (42 – 60)	36	72	**3**	W	W	W	W	W	W	X	X	W	W	W	W	W	W	W	W	W	W	W	W	W	W
48 (36 – 76)	n/a	n/a	**N**	W	W	X	X	X	X	X	X	W	W	W	W	W	W	W	W	W	W	W	W	W	W
72 (55 – 100)	45	110	**4**	W	W	W	W	W	W	X	X	W	W	W	W	W	W	W	W	W	W	W	W	W	W
110 (66 – 160)	n/a	n/a	**T**	W	W	X	X	X	X	X	X	W	W	W	W	W	W	W	W	W	W	W	W	--	--
150 (100 – 200)	85	215	**5**	W	W	W	W	W	W	X	X	W	W	W	W	W	W	W	W	W	W	W	W	W	W
150 (100 – 375)	n/a	n/a	**7**	Y	Y	Y	Y	Y	Y	Y	Y	X	X	X	X	X	X	X	X	X	X	X	--	--	--
300 (200 – 400)	170	425	**6**	W	W	W	W	W	W	X	X	W	W	W	W	W	W	W	W	W	W	W	W	W	W

[a] Transient voltage for 1 second.

Converter Specifications

(Typical at T_{BP} = 25°C, nominal line and 75% load, unless otherwise specified.)

Input Specifications

Parameter	VI-J00 E-Grade			VI-J00 C-, I-, M-Grade			Units	Test Conditions
	Min	Typ	Max	Min	Typ	Max		
Inrush charge		60×10^{-6}			60×10^{-6}	100×10^{-6}	Coulombs	Nominal line
Input reflected ripple current – pp		10%			10%		I_{IN}	Nominal line, full load
Input ripple rejection		$25+20 \log \left(\frac{V_{IN}}{V_{OUT}}\right)$			$30+20 \log \left(\frac{V_{IN}}{V_{OUT}}\right)$		dB	120Hz, nominal line
					$20+20 \log \left(\frac{V_{IN}}{V_{OUT}}\right)$		dB	2400Hz, nominal line
No load power dissipation		1.35	2		1.35	2	Watts	

Converter Specifications (Cont.)

(Typical at T_{BP} = 25°C, nominal line and 75% load, unless otherwise specified.)

Output Characteristics

Parameter	VI-J00 E-Grade			VI-J00 C-, I-, M-Grade			Units	Test Conditions
	Min	Typ	Max	Min	Typ	Max		
Setpoint accuracy		1%	2%		0.5%	1%	V_{NOM}	
Load/line regulation			0.5%		0.05%	0.2%	V_{NOM}	LL to HL, 10% to Full Load
Load/line regulation			1%		0.2%	0.5%	V_{NOM}	LL to HL, No Load to 10%
Output temperature drift		0.02			0.01	0.02	% / °C	Over rated temp.
Long term drift		0.02			0.02		%/1K hours	
Output ripple – pp: 2V, 3.3V			200		100	150	mV	20MHz bandwidth
5V			5%		2%	3%	V_{NOM}	20MHz bandwidth
10 – 95V			3%		0.75%	1.5%	V_{NOM}	20MHz bandwidth
Trim range[a]	50%		110%	50%		110%	V_{NOM}	
Total remote sense compensation	0.5			0.5			Volts	0.25V max. neg. leg
Current limit	105%		135%	105%		125%	$I_{FULL\ LOAD}$	Automatic restart
Short circuit current	105%		140%	105%		130%	$I_{FULL\ LOAD}$	Automatic restart

[a] 10V to 15V outputs, or "V" input range have standard trim range ±10%. Consult factory for wider trim range.
95V output –50 + 0% trim range.

Note: The permissible load current must never be exceeded during normal, abnormal or test conditions. For additional output related application information, please refer to output connections on page 5.

Control Pin Specifications

Parameter	VI-J00 E-Grade			VI-J00 C-, I-, M-Grade			Units	Test Conditions
	Min	Typ	Max	Min	Typ	Max		
Gate out impedance		50			50		Ohms	
Gate in impedance		1000			1000		Ohms	
Gate in high threshold		6				6	Volts	Use open collector
Gate in low threshold	0.65			0.65			Volts	
Gate in low current			6			6	mA	

Converter Specifications (Cont.)

(Typical at T_{BP} = 25°C, nominal line and 75% load, unless otherwise specified.)

Dielectric Withstand Characteristics

Parameter	VI-J00 E-Grade			VI-J00 C-, I-, M-Grade			Units	Test Conditions
	Min	Typ	Max	Min	Typ	Max		
Input to output	3,000			3,000			V_{RMS}	Baseplate earthed
Output to baseplate	500			500			V_{RMS}	
Input to baseplate	1,500			1,500			V_{RMS}	

Thermal Characteristics

Parameter	VI-J00 E-Grade			VI-J00 C-, I-, M-Grade			Units	Test Conditions
	Min	Typ	Max	Min	Typ	Max		
Efficiency		78 – 88%			80 – 90%			
Baseplate to sink		0.14			0.14		°C/Watt	With Vicor P/N 20267

[d] No overtemp protection in booster modules.

Mechanical Specifications

Parameter	VI-J00 E-Grade			VI-J00 C-, I-, M-Grade			Units	Test Conditions
	Min	Typ	Max	Min	Typ	Max		
Weight	2.9 (82.8)	3.2 (92)	3.6 (101.2)	3.4 (96.3)	3.8 (107)	4.1 (117.7)	Ounces (Grams)	

Product Grade Temperatures

Parameter	Storage	Operating	Units	Notes
E	-20 to +105	-10 to + 100	°C	
C	-40 to +105	-25 to + 100	°C	
I	-55 to +105	-40 to + 100	°C	
M	-65 to +105	-55 to + 100	°C	

Maximum Capacitance, Rated Output Voltage <5V

Rated V_{OUT} (V)	I_{OUT} Rating (A)	C_{MAX} (µF)	I_{OUT} Rating (A)	C_{MAX} (µF)
2 to <3	≤10	1500	>10 to 20	5000
3 to <5	≤10	1000	>10 to 20	5000

Maximum Capacitance, Rated Output Voltage ≥5V

Rated V_{OUT} (V)	P_{OUT} Rating (W)	C_{MAX} (µF)	P_{OUT} Rating (W)	C_{MAX} (µF)
5 to <7.5	≤50	1000	>50 to 100	1500
7.5 to <10	≤50	400	>50 to 100	700
10 to <28	≤50	400	>50 to 100	500
>28	≤50	150	>50 to 100	250

Basic Module Operation

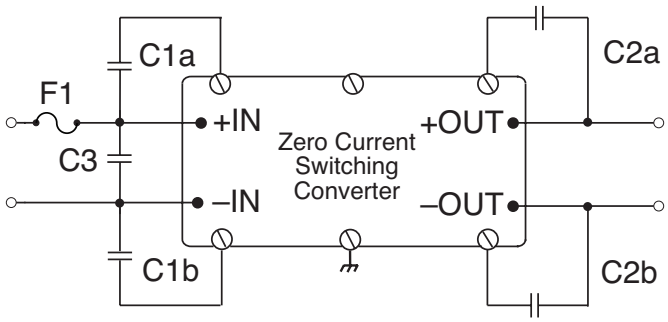

$$C3\ (\mu F) = \frac{400}{V_{IN}\ Minimum}$$

Figure 1 — *Basic module operation requires fusing, grounding, bypassing capacitors.* See Design Guide & Applications Manual.*

Output Connections and Considerations

The permissible load current[e] must never be exceeded during normal, abnormal or test conditions. Converters subject to dynamic loading exceeding 25% of rated current must be reviewed by Vicor Applications Engineering to ensure that the converter will operate properly.

Under dynamic load, light load, or no load conditions, the converter may emit audible noise. Converters that utilize remote sense may require compensation circuitry to offset the phase lag caused by the external output leads and load impedance. Remote Sense leads must be protected for conditions such as lead reversal, noise pickup, open circuit, or excessive output lead resistance between the sense point and the converters output terminals. For applications that may draw more than the rated current, a fast acting electronic circuit breaker must be utilized to protect the converter. Under no circumstance should the rated current be exceeded. Utilizing or testing of current limit or short circuit current will damage the converter. Ensure that the total output capacitance connected to the converter does not exceed the limits on Page 4.

[e] Permissible load current: $\frac{Nominal\ Power\ Rating}{Nominal\ V_{OUT}}$

Storage

Vicor products, when not installed in customer units, should be stored in ESD safe packaging in accordance with ANSI/ESD S20.20, "Protection of Electrical and Electronic Parts, Assemblies and Equipment" and should be maintained in a temperature controlled factory/warehouse environment not exposed to outside elements controlled between the temperature ranges of 15°C and 38°C. Humidity shall not be condensing, no minimum humidity when stored in an ESD compliant package.

Mechanical Drawing

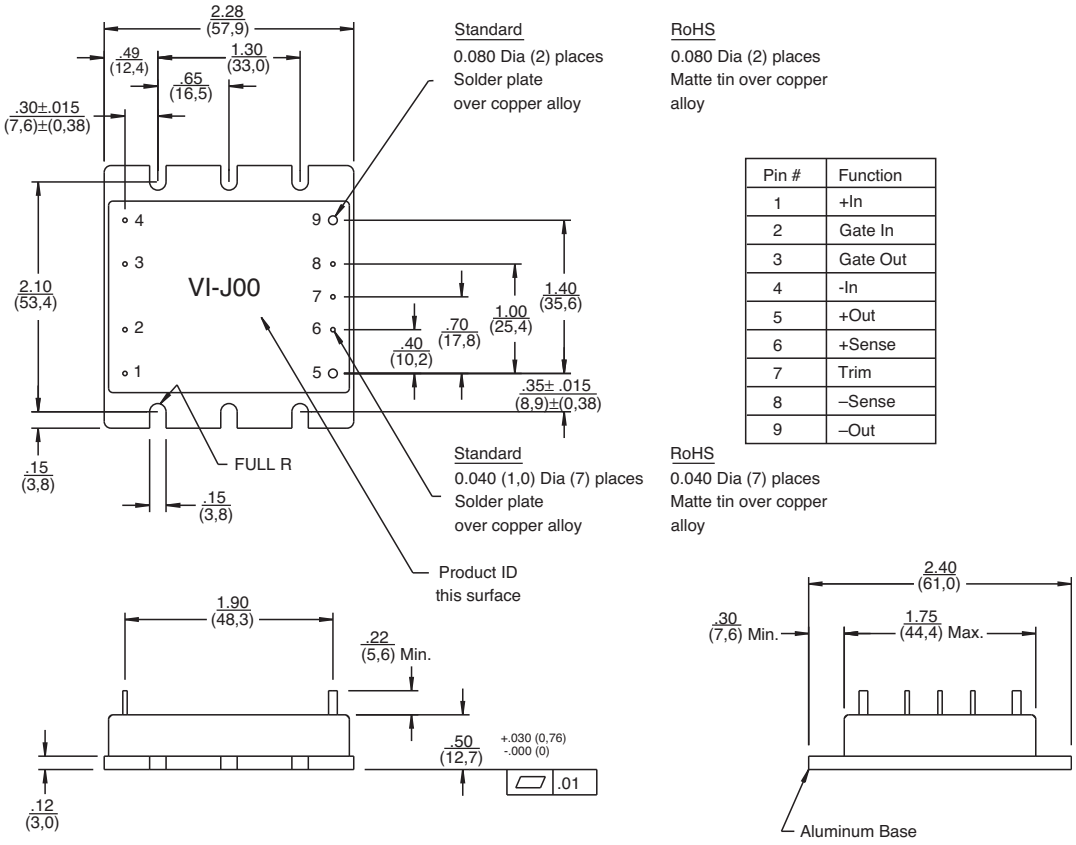

Pin #	Function
1	+In
2	Gate In
3	Gate Out
4	-In
5	+Out
6	+Sense
7	Trim
8	–Sense
9	–Out

PACKAGING OPTIONS

Flangeless package



2.28"L x 1.80"W x 0.50"H
(57,9 x 45,7 x 12,7mm)

To order the SlimMod configuration add the suffix "–S" to the standard module part number.

Qty (2) grounding clips are included with each SlimMod P/N 32187

Flangeless package with integral heat sink

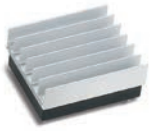

Longitudinal, 0.25"(6.35mm) fins — add suffix "–F1"
Longitudinal, 0.50"(12.7mm) fins — add suffix "–F2"



Transverse, 0.25"(6.35mm) fins — add suffix "–F3"
Transverse, 0.50"(12.7mm) fins — add suffix "–F4"

Available with longitudinal or transverse fins of 0.25"(6.35mm) or 0.50"(12.7mm) height. Add the appropriate suffix to the module part number.

Qty (4) grounding clips are included with each FinMod
F1, F2 P/N 32185
F3, F4 P/N 32186

MegaMod Jr.

Chassis mount alternatives, one, two or three outputs: up to 300W



1 up – 2.58" x 2.5" x 0.62" (65,5 x 63,5 x 15,7mm)
2 up – 2.58" x 4.9" x 0.62" (65,5 x 124,5 x 15,7mm)
3 up – 2.58" x 7.3" x 0.62" (65,5 x 185,4 x 15,7mm)

BusMod



2.28"L x 2.40"W x 1.08"H
(57,9 x 61,0 x 27,4mm)

To order the BusMod fully assembled, add suffix "–B1" to the standard module part number.

To order the BusMod separately:
Half-sized BusMod — P/N 18952

See BusMod Mechanical Drawings for more details.

Vicor's comprehensive line of power solutions includes high density AC-DC and DC-DC modules and accessory components, fully configurable AC-DC and DC-DC power supplies, and complete custom power systems.

Information furnished by Vicor is believed to be accurate and reliable. However, no responsibility is assumed by Vicor for its use. Vicor makes no representations or warranties with respect to the accuracy or completeness of the contents of this publication. Vicor reserves the right to make changes to any products, specifications, and product descriptions at any time without notice. Information published by Vicor has been checked and is believed to be accurate at the time it was printed; however, Vicor assumes no responsibility for inaccuracies. Testing and other quality controls are used to the extent Vicor deems necessary to support Vicor's product warranty. Except where mandated by government requirements, testing of all parameters of each product is not necessarily performed.

Specifications are subject to change without notice.

Visit http://www.vicorpower.com/vi-200_vi-j00 for the latest product information.

Vicor's Standard Terms and Conditions and Product Warranty

All sales are subject to Vicor's Standard Terms and Conditions of Sale, and Product Warranty which are available on Vicor's webpage (http://www.vicorpower.com/termsconditionswarranty) or upon request.

Life Support Policy

VICOR'S PRODUCTS ARE NOT AUTHORIZED FOR USE AS CRITICAL COMPONENTS IN LIFE SUPPORT DEVICES OR SYSTEMS WITHOUT THE EXPRESS PRIOR WRITTEN APPROVAL OF THE CHIEF EXECUTIVE OFFICER AND GENERAL COUNSEL OF VICOR CORPORATION. As used herein, life support devices or systems are devices which (a) are intended for surgical implant into the body, or (b) support or sustain life and whose failure to perform when properly used in accordance with instructions for use provided in the labeling can be reasonably expected to result in a significant injury to the user. A critical component is any component in a life support device or system whose failure to perform can be reasonably expected to cause the failure of the life support device or system or to affect its safety or effectiveness. Per Vicor Terms and Conditions of Sale, the user of Vicor products and components in life support applications assumes all risks of such use and indemnifies Vicor against all liability and damages.

Intellectual Property Notice

Vicor and its subsidiaries own Intellectual Property (including issued U.S. and Foreign Patents and pending patent applications) relating to the products described in this data sheet. No license, whether express, implied, or arising by estoppel or otherwise, to any intellectual property rights is granted by this document. Interested parties should contact Vicor's Intellectual Property Department.

Contact Us: http://www.vicorpower.com/contact-us

Vicor Corporation
25 Frontage Road
Andover, MA, USA 01810
Tel: 800-735-6200
Fax: 978-475-6715
www.vicorpower.com

email
Customer Service: custserv@vicorpower.com
Technical Support: apps@vicorpower.com

©2017 Vicor Corporation. All rights reserved. The Vicor name is a registered trademark of Vicor Corporation.
All other trademarks, product names, logos and brands are property of their respective owners.