Wirewound, Surface-Mount Molded Inductors



FEATURES

- 3.2 mm x 2.5 mm x 2.2mm SMD size
- Printed marking
- Molded construction provides superior strength and moisture resistance
- Compatible with vapor phase and infrared reflow soldering
- Tape and reel packaging for automatic handling, 2000/reel, EIA-481
- Material categorization: for definitions of compliance please see www.vishay.com/doc?99912

Pb-free

RoHS COMPLIANT

TEST EQUIPMENT

- HP4342A Q meter with Vishay Dale test fixture or equivalent
- HP4191A RF impedance analyzer (for SRF measurements)
- Wheatstone bridge

ELECTRICAL SPECIFICATIONS

Inductance range: 0.01 µH to 220 µH

Special tolerances available upon request

Operating temperature: -55 °C to +125 °C

Coilform material: non-magnetic from 0.01 µH to 0.10 µH; powdered iron from 0.12 µH to 100 µH; ferrite from 120 µH to 220 µH

STANDARD ELECTRICAL SPECIFICATIONS

PART NUMBER	IND. (µH)	TOL. (%)	TEST FREQ. (MHz) L & Q	Q MIN.	SRF MIN. (MHz)	DCR MAX. (Ω)	RATED DC CURRENT (mA) (1)
IMC1210ER10NM	0.010	20	50	30	1000	0.13	734
IMC1210ER12NM	0.012	20	50	30	1000	0.14	707
IMC1210ER15NM	0.015	20	50	30	1000	0.16	661
IMC1210ER18NM	0.018	20	50	30	1000	0.18	624
IMC1210ER22NM	0.022	20	50	30	1000	0.20	592
IMC1210ER27NM	0.027	20	50	30	1000	0.22	564
IMC1210ER33NM	0.033	20	50	30	1000	0.24	540
IMC1210ER39NM	0.039	20	50	30	1000	0.27	530
IMC1210ER47NM	0.047	20	50	30	1000	0.30	483
IMC1210ER56NM	0.056	20	50	30	1000	0.33	470
IMC1210ER68NM	0.068	20	50	30	1000	0.36	450
IMC1210ER82NM	0.082	20	50	30	900	0.40	450
IMC1210ERR10M	0.10	20	50	30	700	0.44	450
IMC1210ERR12M	0.12	20	25.2	30	500	0.22	584
IMC1210ERR15M	0.15	20	25.2	30	450	0.25	548
IMC1210ERR18M	0.18	20	25.2	30	400	0.28	518
IMC1210ERR22M	0.22	20	25.2	30	350	0.32	484
IMC1210ERR27M	0.27	20	25.2	30	320	0.36	456
IMC1210ERR33M	0.33	20	25.2	30	300	0.40	453
IMC1210ERR39M	0.39	20	25.2	30	250	0.45	450
IMC1210ERR47M	0.47	20	25.2	30	220	0.50	450
IMC1210ERR56M	0.56	20	25.2	30	180	0.55	450
IMC1210ERR68M	0.68	20	25.2	30	160	0.60	450
IMC1210ERR82M	0.82	20	25.2	30	140	0.67	450
IMC1210ER1R0K	1.0	10	7.96	30	120	0.70	400
IMC1210ER1R2K	1.2	10	7.96	30	100	0.75	390
IMC1210ER1R5K	1.5	10	7.96	30	85	0.85	370

For technical questions, contact: magnetics@vishay.com

THIS DOCUMENT IS SUBJECT TO CHANGE WITHOUT NOTICE. THE PRODUCTS DESCRIBED HEREIN AND THIS DOCUMENT ARE SUBJECT TO SPECIFIC DISCLAIMERS, SET FORTH AT www.vishay.com/doc?91000

STANDARD ELECTRICAL SPECIFICATIONS

PART NUMBER	IND. (µH)	TOL. (%)	TEST FREQ. (MHz) L & Q	Q MIN.	SRF MIN. (MHz)	DCR MAX. (Ω)	RATED DC CURRENT (mA) (1)
IMC1210ER1R8K	1.8	10	7.96	30	80	0.90	350
IMC1210ER2R2K	2.2	10	7.96	30	75	1.0	320
IMC1210ER2R7K	2.7	10	7.96	30	70	1.1	290
IMC1210ER3R3K	3.3	10	7.96	30	60	1.2	260
IMC1210ER3R9K	3.9	10	7.96	30	55	1.3	250
IMC1210ER4R7K	4.7	10	7.96	30	50	1.5	224
IMC1210ER5R6K	5.6	10	7.96	30	45	1.6	217
IMC1210ER6R8K	6.8	10	7.96	30	40	1.8	204
IMC1210ER8R2K	8.2	10	7.96	30	38	2.0	194
IMC1210ER100K	10	10	2.52	30	33	2.1	189
IMC1210ER120K	12	10	2.52	30	30	2.5	173
IMC1210ER150K	15	10	2.52	30	21	2.8	164
IMC1210ER180K	18	10	2.52	30	20	3.3	151
IMC1210ER220K	22	10	2.52	30	19	3.7	145
IMC1210ER270K	27	10	2.52	30	18	5.0	122
IMC1210ER330K	33	10	2.52	30	16	6.0	112
IMC1210ER390K	39	10	2.52	30	15	7.0	104
IMC1210ER470K	47	10	2.52	30	14	9.0	91
IMC1210ER560K	56	10	2.52	30	12	10.0	87
IMC1210ER680K	68	10	2.52	30	11	11.0	83
IMC1210ER820K	82	10	2.52	30	10	12.0	79
IMC1210ER101K	100	10	0.796	20	9	14.0	73
IMC1210ER121K	120	10	0.796	15	8	11.0	70
IMC1210ER151K	150	10	0.796	15	6.5	15.0	65
IMC1210ER181K	180	10	0.796	15	6	17.0	60
IMC1210ER221K	220	10	0.796	15	6	21.0	50

Note

(1) Rated DC current based on the maximum temperature rise, not to exceed 40 °C at +85 °C ambient

DIMENSIONS in inches [millimeters]

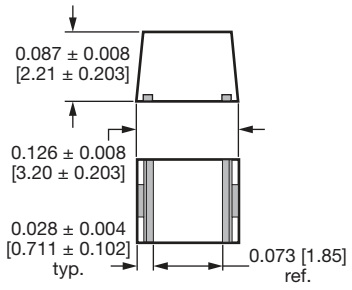

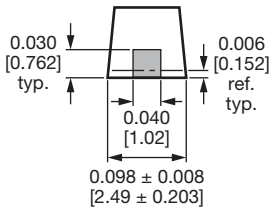

Guidelines for parallel component printed circuit mounting pads on IMC-1210 chip inductors

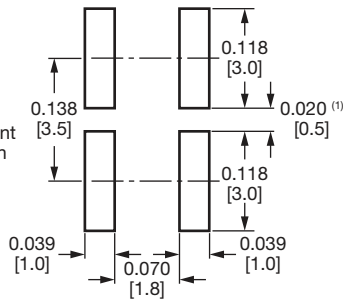

Note

(1) Recommended spacing between components

PART MARKING

- Vishay Dale
- Inductance code
- Date code

For technical questions, contact: magnetics@vishay.com

THIS DOCUMENT IS SUBJECT TO CHANGE WITHOUT NOTICE. THE PRODUCTS DESCRIBED HEREIN AND THIS DOCUMENT ARE SUBJECT TO SPECIFIC DISCLAIMERS, SET FORTH AT www.vishay.com/doc?91000

DESCRIPTION

IMC-1210	10 µH	± 10 %	ER	e3
MODEL	INDUCTANCE VALUE	INDUCTANCE TOLERANCE	PACKAGE CODE	JEDEC® LEAD (Pb)-FREE STANDARD

GLOBAL PART NUMBER

I	M	C	1	2	1	0	E	R	1	0	0	K
PRODUCT FAMILY			SIZE				PACKAGE CODE		INDUCTANCE VALUE			TOL.

For technical questions, contact: magnetics@vishay.com

THIS DOCUMENT IS SUBJECT TO CHANGE WITHOUT NOTICE. THE PRODUCTS DESCRIBED HEREIN AND THIS DOCUMENT ARE SUBJECT TO SPECIFIC DISCLAIMERS, SET FORTH AT www.vishay.com/doc?91000

Disclaimer

ALL PRODUCT, PRODUCT SPECIFICATIONS AND DATA ARE SUBJECT TO CHANGE WITHOUT NOTICE TO IMPROVE RELIABILITY, FUNCTION OR DESIGN OR OTHERWISE.

Vishay Intertechnology, Inc., its affiliates, agents, and employees, and all persons acting on its or their behalf (collectively, “Vishay”), disclaim any and all liability for any errors, inaccuracies or incompleteness contained in any datasheet or in any other disclosure relating to any product.

Vishay makes no warranty, representation or guarantee regarding the suitability of the products for any particular purpose or the continuing production of any product. To the maximum extent permitted by applicable law, Vishay disclaims (i) any and all liability arising out of the application or use of any product, (ii) any and all liability, including without limitation special, consequential or incidental damages, and (iii) any and all implied warranties, including warranties of fitness for particular purpose, non-infringement and merchantability.

Statements regarding the suitability of products for certain types of applications are based on Vishay's knowledge of typical requirements that are often placed on Vishay products in generic applications. Such statements are not binding statements about the suitability of products for a particular application. It is the customer's responsibility to validate that a particular product with the properties described in the product specification is suitable for use in a particular application. Parameters provided in datasheets and / or specifications may vary in different applications and performance may vary over time. All operating parameters, including typical parameters, must be validated for each customer application by the customer's technical experts. Product specifications do not expand or otherwise modify Vishay's terms and conditions of purchase, including but not limited to the warranty expressed therein.

Hyperlinks included in this datasheet may direct users to third-party websites. These links are provided as a convenience and for informational purposes only. Inclusion of these hyperlinks does not constitute an endorsement or an approval by Vishay of any of the products, services or opinions of the corporation, organization or individual associated with the third-party website. Vishay disclaims any and all liability and bears no responsibility for the accuracy, legality or content of the third-party website or for that of subsequent links.

Vishay products are not designed for use in life-saving or life-sustaining applications or any application in which the failure of the Vishay product could result in personal injury or death unless specifically qualified in writing by Vishay. Customers using or selling Vishay products not expressly indicated for use in such applications do so at their own risk. Please contact authorized Vishay personnel to obtain written terms and conditions regarding products designed for such applications.

No license, express or implied, by estoppel or otherwise, to any intellectual property rights is granted by this document or by any conduct of Vishay. Product names and markings noted herein may be trademarks of their respective owners.

© 2024 VISHAY INTERTECHNOLOGY, INC. ALL RIGHTS RESERVED

THIS DOCUMENT IS SUBJECT TO CHANGE WITHOUT NOTICE. THE PRODUCTS DESCRIBED HEREIN AND THIS DOCUMENT ARE SUBJECT TO SPECIFIC DISCLAIMERS, SET FORTH AT www.vishay.com/doc?91000