Dual High Voltage Trench MOS Barrier Schottky Rectifier

Ultra Low V_F = 0.56 V at I_F = 5 A

TMBS®

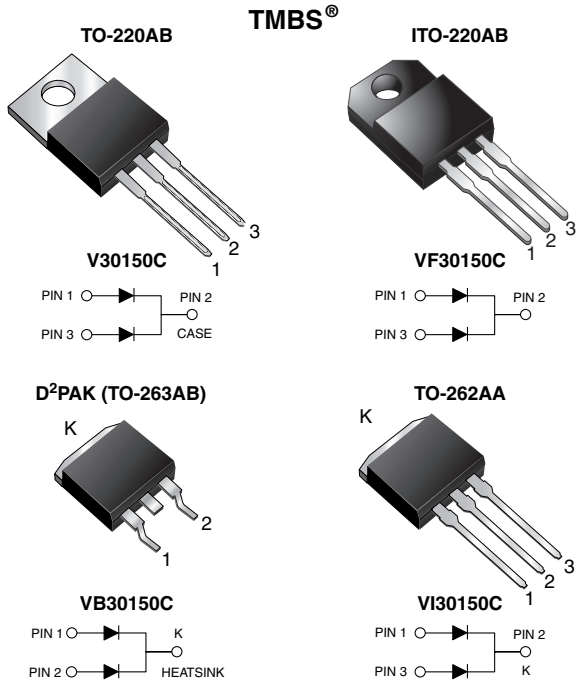

FEATURES

- Trench MOS Schottky technology
- Low forward voltage drop, low power losses
- High efficiency operation
- Meets MSL level 1, per J-STD-020, LF maximum peak of 245 °C (for D²PAK (TO-263AB) package)
- Solder bath temperature 275 °C maximum, 10 s, per JESD 22-B106 (for TO-220AB, ITO-220AB and TO-262AA package)
- Material categorization: for definitions of compliance please see www.vishay.com/doc?99912

TYPICAL APPLICATIONS

For use in high frequency converters, switching power supplies, freewheeling diodes, OR-ing diode, DC/DC converters and reverse battery protection.

MECHANICAL DATA

Case: TO-220AB, ITO-220AB, D²PAK (TO-263AB), and TO-262AA

Molding compound meets UL 94 V-0 flammability rating Base P/N-E3 - RoHS-compliant, commercial grade

Terminals: matte tin plated leads, solderable per J-STD-002 and JESD 22-B102 E3 suffix meets JESD 201 class 1A whisker test

Polarity: as marked

Mounting Torque: 10 in-lbs max.

LINKS TO ADDITIONAL RESOURCES

3D Models

PRIMARY CHARACTERISTICS	
$I_{F(AV)}$	2 x 15 A
V_{RRM}	150 V
I_{FSM}	140 A
V_F at I_F = 15 A	0.71 V
T_J max.	150 °C
Package	TO-220AB, ITO-220AB, D²PAK (TO-263AB), TO-262AA
Circuit configuration	Common cathode

MAXIMUM RATINGS (T_A = 25 °C unless otherwise noted)

PARAMETER		SYMBOL	V30150C	VF30150C	VB30150C	VI30150C	UNIT
Max. repetitive peak reverse voltage		V_{RRM}	150				V
Max. average forward rectified current (fig. 1)	per device	$I_{F(AV)}$	30				A
	per diode		15				
Peak forward surge current 8.3 ms single half sine-wave superimposed on rated load per diode		I_{FSM}	140				A
Non-repetitive avalanche energy at T_J = 25 °C, L = 60 mH per diode		E_{AS}	110				mJ
Peak repetitive reverse current at t_p = 2 µs, 1 kHz, T_J = 38 °C ± 2 °C per diode		I_{RRM}	0.5				A
Voltage rate of change (rated V_R)		dV/dt	10 000				V/µs
Isolation voltage (ITO-220AB only) from terminal to heatsink t = 1 min		V_{AC}	1500				V
Operating junction and storage temperature range		T_J, T_{STG}	-55 to +150				°C

For technical questions within your region: DiodesAmericas@vishay.com, DiodesAsia@vishay.com, DiodesEurope@vishay.com

THIS DOCUMENT IS SUBJECT TO CHANGE WITHOUT NOTICE. THE PRODUCTS DESCRIBED HEREIN AND THIS DOCUMENT ARE SUBJECT TO SPECIFIC DISCLAIMERS, SET FORTH AT www.vishay.com/doc?91000

ELECTRICAL CHARACTERISTICS (T_A = 25 °C unless otherwise noted)						
PARAMETER	**TEST CONDITIONS**		**SYMBOL**	**TYP.**	**MAX.**	**UNIT**
Breakdown voltage	I_R = 1.0 mA	T_A = 25 °C	V_{BR}	150 (min.)	-	V
Instantaneous forward voltage per diode (1)	I_F = 5 A	T_A = 25 °C	V_F	0.72	-	V
	I_F = 7.5 A			0.81	-	
	I_F = 15 A			1.11	1.36	
	I_F = 5 A	T_A = 125 °C		0.56	-	
	I_F = 7.5 A			0.61	-	
	I_F = 15 A			0.71	0.79	
Reverse current per diode (2)	V_R = 100 V	T_A = 25 °C	I_R	1.5	-	µA
		T_A = 125 °C		2	-	mA
	V_R = 150 V	T_A = 25 °C		-	200	µA
		T_A = 125 °C		4	20	mA

Notes

(1) Pulse test: 300 µs pulse width, 1 % duty cycle

(2) Pulse test: Pulse width ≤ 40 ms

THERMAL CHARACTERISTICS (T_A = 25 °C unless otherwise noted)						
PARAMETER	**SYMBOL**	**V30150C**	**VF30150C**	**VI30150C**	**VI30150C**	**UNIT**
Typical thermal resistance per diode	$R_{\theta JC}$	2.2	4.5	2.2	2.2	°C/W

ORDERING INFORMATION (Example)					
PACKAGE	**PREFERRED P/N**	**UNIT WEIGHT (g)**	**PACKAGE CODE**	**BASE QUANTITY**	**DELIVERY MODE**
TO-220AB	V30150C-E3/4W	1.89	4W	50/tube	Tube
ITO-220AB	VF30150C-E3/4W	1.75	4W	50/tube	Tube
D^2PAK (TO-263AB)	VB30150C-E3/4W	1.39	4W	50/tube	Tube
D^2PAK (TO-263AB)	VB30150C-E3/8W	1.39	8W	800/reel	Tape and reel
TO-262AA	VI30150C-E3/4W	1.46	4W	50/tube	Tube

RATINGS AND CHARACTERISTICS CURVES (T_A = 25 °C unless otherwise noted)

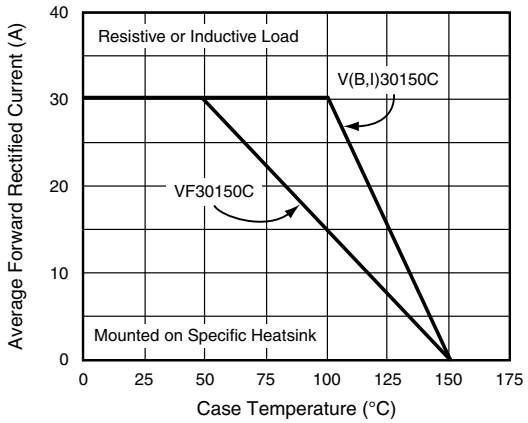

Fig. 1 - Maximum Forward Current Derating Curve

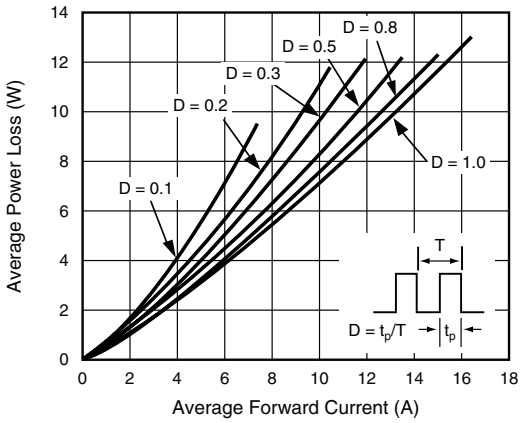

Fig. 2 - Forward Power Loss Characteristics Per Diode

For technical questions within your region: DiodesAmericas@vishay.com, DiodesAsia@vishay.com, DiodesEurope@vishay.com
THIS DOCUMENT IS SUBJECT TO CHANGE WITHOUT NOTICE. THE PRODUCTS DESCRIBED HEREIN AND THIS DOCUMENT ARE SUBJECT TO SPECIFIC DISCLAIMERS, SET FORTH AT www.vishay.com/doc?91000

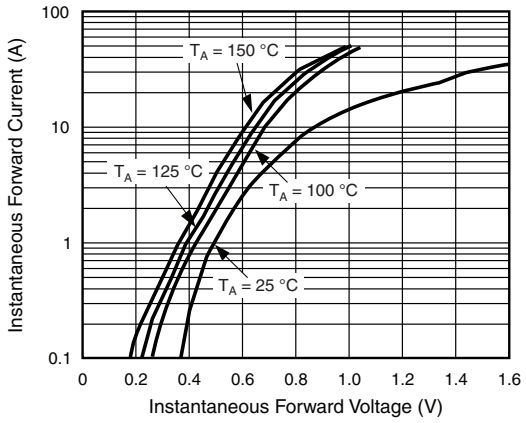

Fig. 3 - Typical Instantaneous Forward Characteristics Per Diode

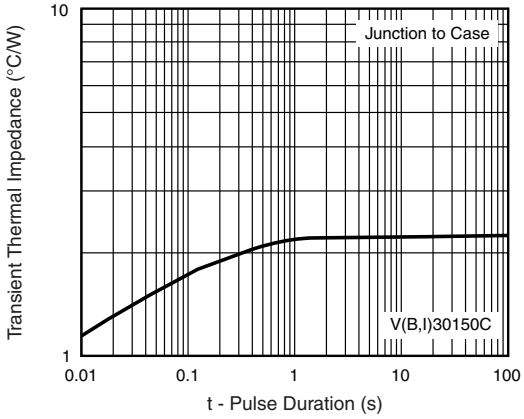

Fig. 6 - Typical Transient Thermal Impedance Per Diode

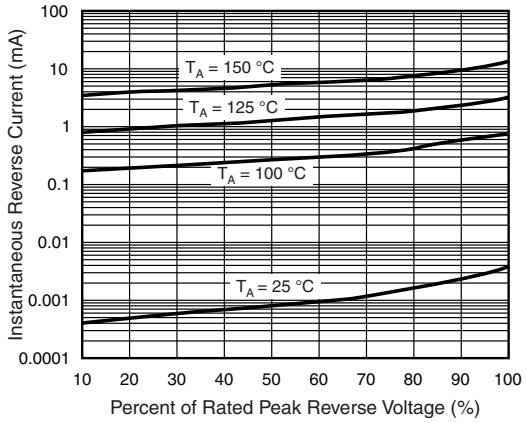

Fig. 4 - Typical Reverse Characteristics Per Diode

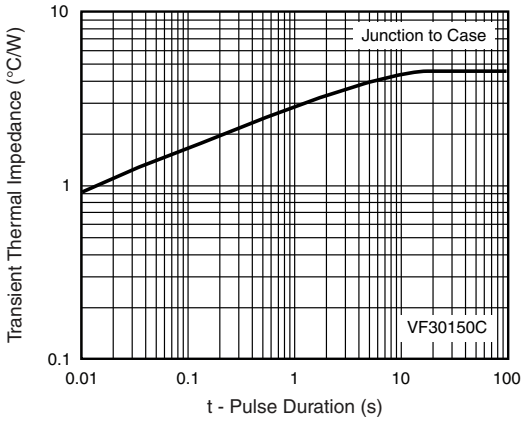

Fig. 7 - Typical Transient Thermal Impedance Per Diode

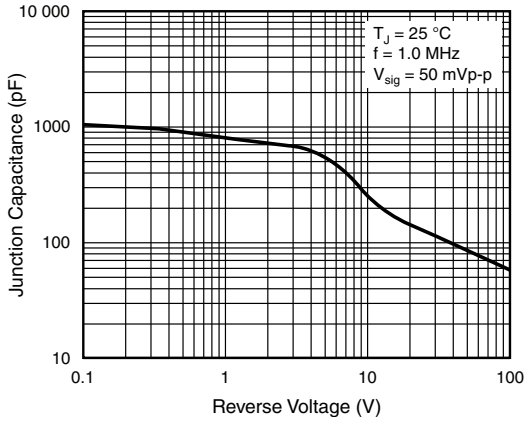

Fig. 5 - Typical Junction Capacitance

For technical questions within your region: DiodesAmericas@vishay.com, DiodesAsia@vishay.com, DiodesEurope@vishay.com
THIS DOCUMENT IS SUBJECT TO CHANGE WITHOUT NOTICE. THE PRODUCTS DESCRIBED HEREIN AND THIS DOCUMENT ARE SUBJECT TO SPECIFIC DISCLAIMERS, SET FORTH AT www.vishay.com/doc?91000

PACKAGE OUTLINE DIMENSIONS in inches (millimeters)

TO-220AB

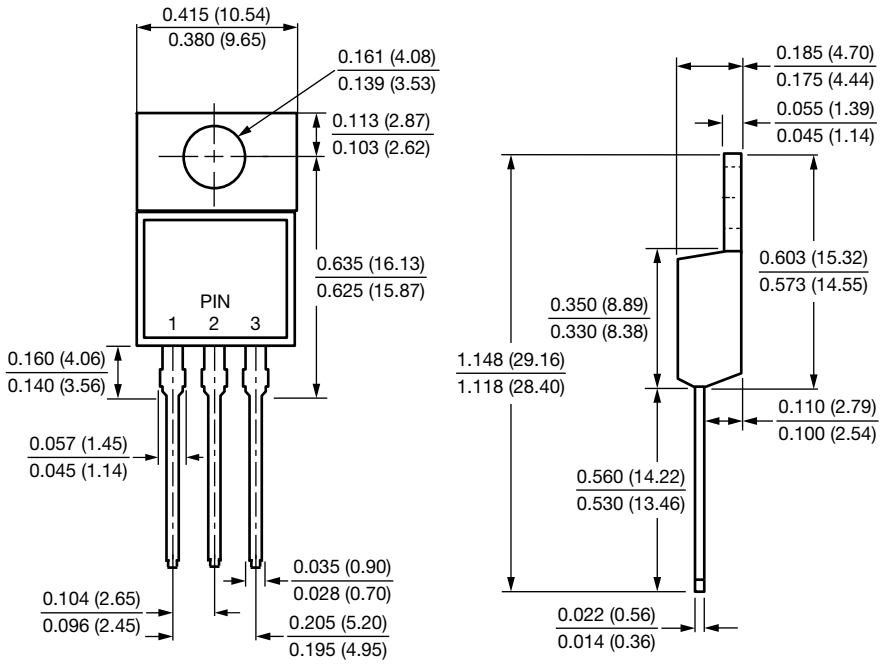

ITO-220AB

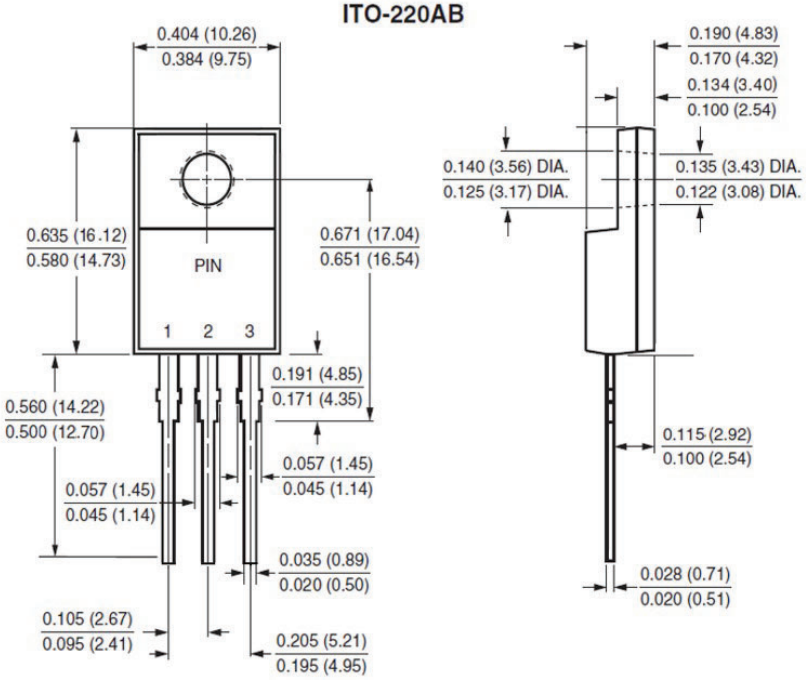

For technical questions within your region: DiodesAmericas@vishay.com, DiodesAsia@vishay.com, DiodesEurope@vishay.com
THIS DOCUMENT IS SUBJECT TO CHANGE WITHOUT NOTICE. THE PRODUCTS DESCRIBED HEREIN AND THIS DOCUMENT ARE SUBJECT TO SPECIFIC DISCLAIMERS, SET FORTH AT www.vishay.com/doc?91000

TO-262AA

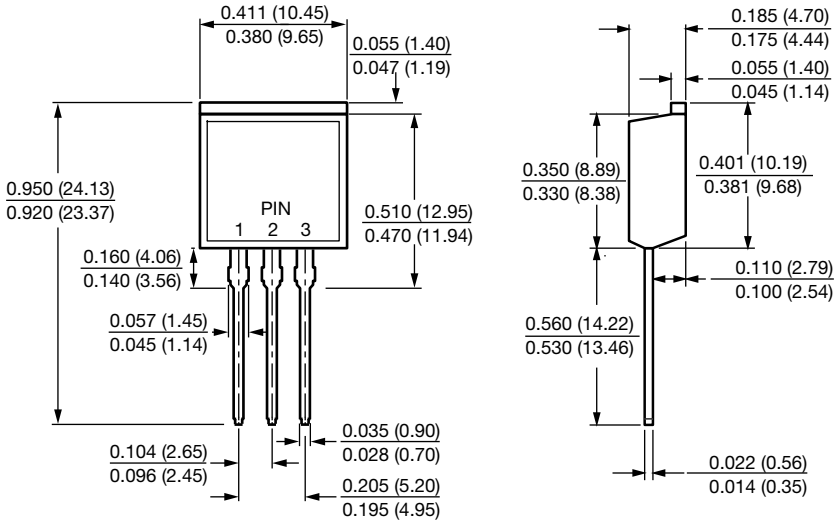

D²PAK (TO-263AB)

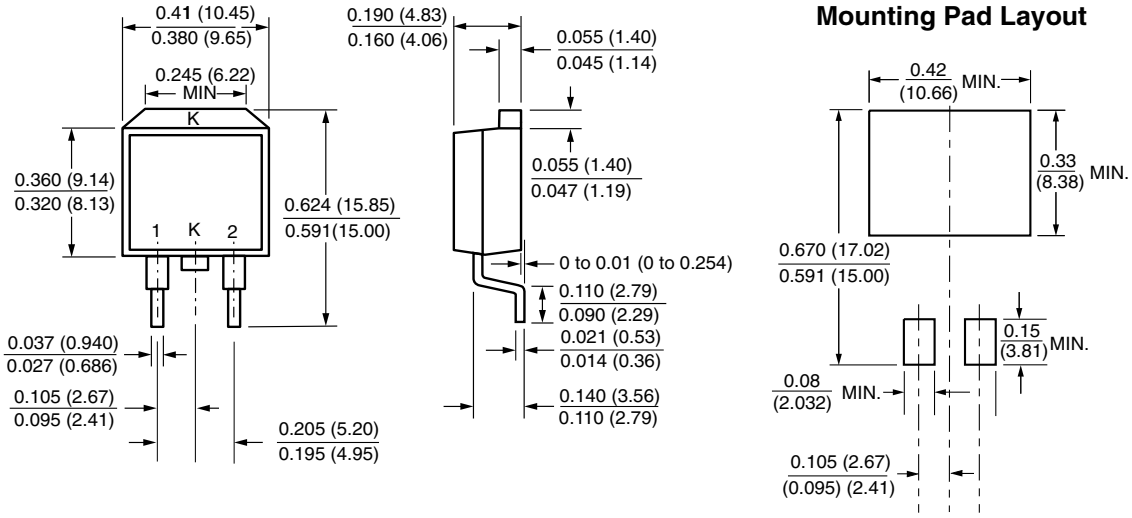

Mounting Pad Layout

For technical questions within your region: DiodesAmericas@vishay.com, DiodesAsia@vishay.com, DiodesEurope@vishay.com
THIS DOCUMENT IS SUBJECT TO CHANGE WITHOUT NOTICE. THE PRODUCTS DESCRIBED HEREIN AND THIS DOCUMENT ARE SUBJECT TO SPECIFIC DISCLAIMERS, SET FORTH AT www.vishay.com/doc?91000

Disclaimer

ALL PRODUCT, PRODUCT SPECIFICATIONS AND DATA ARE SUBJECT TO CHANGE WITHOUT NOTICE TO IMPROVE RELIABILITY, FUNCTION OR DESIGN OR OTHERWISE.

Vishay Intertechnology, Inc., its affiliates, agents, and employees, and all persons acting on its or their behalf (collectively, “Vishay”), disclaim any and all liability for any errors, inaccuracies or incompleteness contained in any datasheet or in any other disclosure relating to any product.

Vishay makes no warranty, representation or guarantee regarding the suitability of the products for any particular purpose or the continuing production of any product. To the maximum extent permitted by applicable law, Vishay disclaims (i) any and all liability arising out of the application or use of any product, (ii) any and all liability, including without limitation special, consequential or incidental damages, and (iii) any and all implied warranties, including warranties of fitness for particular purpose, non-infringement and merchantability.

Statements regarding the suitability of products for certain types of applications are based on Vishay's knowledge of typical requirements that are often placed on Vishay products in generic applications. Such statements are not binding statements about the suitability of products for a particular application. It is the customer's responsibility to validate that a particular product with the properties described in the product specification is suitable for use in a particular application. Parameters provided in datasheets and / or specifications may vary in different applications and performance may vary over time. All operating parameters, including typical parameters, must be validated for each customer application by the customer's technical experts. Product specifications do not expand or otherwise modify Vishay's terms and conditions of purchase, including but not limited to the warranty expressed therein.

Hyperlinks included in this datasheet may direct users to third-party websites. These links are provided as a convenience and for informational purposes only. Inclusion of these hyperlinks does not constitute an endorsement or an approval by Vishay of any of the products, services or opinions of the corporation, organization or individual associated with the third-party website. Vishay disclaims any and all liability and bears no responsibility for the accuracy, legality or content of the third-party website or for that of subsequent links.

Vishay products are not designed for use in life-saving or life-sustaining applications or any application in which the failure of the Vishay product could result in personal injury or death unless specifically qualified in writing by Vishay. Customers using or selling Vishay products not expressly indicated for use in such applications do so at their own risk. Please contact authorized Vishay personnel to obtain written terms and conditions regarding products designed for such applications.

No license, express or implied, by estoppel or otherwise, to any intellectual property rights is granted by this document or by any conduct of Vishay. Product names and markings noted herein may be trademarks of their respective owners.

© 2024 VISHAY INTERTECHNOLOGY, INC. ALL RIGHTS RESERVED

THIS DOCUMENT IS SUBJECT TO CHANGE WITHOUT NOTICE. THE PRODUCTS DESCRIBED HEREIN AND THIS DOCUMENT ARE SUBJECT TO SPECIFIC DISCLAIMERS, SET FORTH AT www.vishay.com/doc?91000