Optocoupler, Phototransistor Output, ATEX Certified

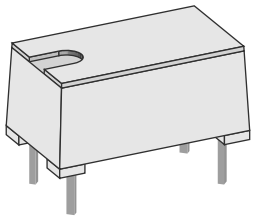

Top view

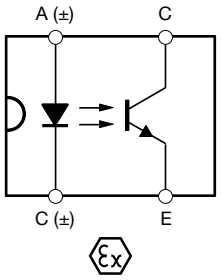

LINKS TO ADDITIONAL RESOURCES

3D Models | Models | Related Documents | Footprints

DESCRIPTION

The CNY65Exi consists of a phototransistor optically coupled to an infrared-emitting diode in a 4 pin plastic package. The components are mounted opposite one another, with a distance between input and output of > 3.0 mm; meeting the highest of safety requirements.

The CNY65Exi is ATEX certificated for explosive atmospheres according to the Directive 2014/34/EU

AGENCY APPROVALS

- ATEX :PTB 03 ATEX 2033 U
  EN 60079-0 : 2018
  EN 60079-11 : 2012
  EN 60079-26 : 2015

FEATURES

- Suitable for intrinsic safe circuits for gas and dust
- Gas safety provision: II (1) G [Ex ia Ga] IIC
- Dust safety provision: II (1) D [Ex ia Da] IIIC
- Conforms to latest EN 60079-0 : 2018
- Qualified for continuously, longterm, or frequently dangerous explosive environments, zone 0
- Isolation voltage (V_{ISO}) of 11 600 V_{peak} for 1 minute
- Distance from emitter to detector through insulation ≥ 3 mm
- CTR from 50 % to 300 %
- Very low coupling capacity (C_K)
  - 0.3 pF superior noise immunity between input and output pins
- Material categorization: for definitions of compliance please see www.vishay.com/doc?99912

Pb-free

e4

RoHS COMPLIANT

APPLICATIONS

- Electronics used in potentially explosive gas and dust environments
  - Safety related process automation and instrumentation
  - Natural gas metering and flow measurement
  - Power and motor switching
  - Power supplies, metering, and data acquisition
  - Lighting and signaling
  - Petrol and grain transport and storage

ORDERING INFORMATION

C	N	Y	6	5	X	E	x	i
PART NUMBER					CTR BIN	PACKAGE OPTION		

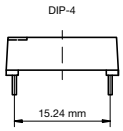

AGENCY CERTIFIED / PACKAGE	CTR (%)	
ATEX	**50 to 300**	**100 to 200**
DIP-4, HV, high isolation distance	CNY65Exi	CNY65BExi

For technical questions, contact: optocoupleranswers@vishay.com

THIS DOCUMENT IS SUBJECT TO CHANGE WITHOUT NOTICE. THE PRODUCTS DESCRIBED HEREIN AND THIS DOCUMENT ARE SUBJECT TO SPECIFIC DISCLAIMERS, SET FORTH AT www.vishay.com/doc?91000

ABSOLUTE MAXIMUM RATINGS (T_{amb} = 25 °C, unless otherwise specified)				
PARAMETER	**CONDITION**	**SYMBOL**	**VALUE**	**UNIT**
INPUT				
Reverse voltage		V_R	5	V
Forward current		I_F	75	mA
Forward surge current	$t_p \leq 10$ µs	I_{FSM}	1.5	A
Power dissipation		P_{diss}	120	mW
Junction temperature		T_j	100	°C
OUTPUT				
Collector emitter voltage		V_{CEO}	32	V
Emitter collector voltage		V_{ECO}	7	V
Collector current		I_C	50	mA
Collector peak current	$t_p/T = 0.5$, $t_p \leq 10$ ms	I_{CM}	100	mA
Power dissipation		P_{diss}	130	mW
Junction temperature		T_j	100	°C
COUPLER				
Total power dissipation		P_{tot}	250	mW
Ambient temperature range		T_{amb}	-55 to +85	°C
Storage temperature range		T_{stg}	-55 to +100	°C
Soldering temperature	2 mm from case, $t \leq 10$ s	T_{sld}	260	°C

Note

- Stresses in excess of the absolute Maximum Ratings can cause permanent damage to the device. Functional operation of the device is not implied at these or any other conditions in excess of those given in the operational sections of this document. Exposure to absolute Maximum Rating for extended periods of the time can adversely affect reliability

ELECTRICAL CHARACTERISTICS (T_{amb} = 25 °C, unless otherwise specified)						
PARAMETER	**TEST CONDITION**	**SYMBOL**	**MIN.**	**TYP.**	**MAX.**	**UNIT**
INPUT						
Forward voltage	I_F = 50 mA	V_F	-	1.25	1.6	V
OUTPUT						
Collector emitter voltage	I_C = 1 mA	V_{CEO}	32	-	-	V
Emitter collector voltage	I_E = 100 µA	V_{ECO}	7	-	-	V
Collector dark current	V_{CE} = 20 V, I_f = 0, E = 0	I_{CEO}	-	-	200	nA
COUPLER						
Collector saturation voltage	I_F = 10 mA, I_C = 1 mA	V_{CEsat}	-	-	0.3	V
Cut-off frequency	V_{CE} = 5 V, I_F = 10 mA, R_L = 100 Ω	f_c	110	-	-	kHz
Coupling capacitance	f = 1 MHz	C_k	-	0.3	-	pF

Note

- Minimum and maximum values are testing requirements. Typical values are characteristics of the device and are the result of engineering evaluation. Typical values are for information only and are not part of the testing requirements

CURRENT TRANSFER RATIO (T_{amb} = 25 °C, unless otherwise specified)							
PARAMETER	**TEST CONDITION**	**PART**	**SYMBOL**	**MIN.**	**TYP.**	**MAX.**	**UNIT**
I_C/I_F	V_{CE} = 5 V, I_F = 10 mA	CNY65Exi	CTR	50	100	300	%
		CNY65BExi	CTR	100	-	200	%

For technical questions, contact: optocoupleranswers@vishay.com
THIS DOCUMENT IS SUBJECT TO CHANGE WITHOUT NOTICE. THE PRODUCTS DESCRIBED HEREIN AND THIS DOCUMENT ARE SUBJECT TO SPECIFIC DISCLAIMERS, SET FORTH AT www.vishay.com/doc?91000

SAFETY AND INSULATION RATINGS				
PARAMETER		**SYMBOL**	**VALUE**	**UNIT**
Climatic classification	According to IEC 68 part 1		40 / 85 / 21	
Pollution degree	According to DIN VDE 0109		2	
Comparative tracking index	Insulation group IIIa	CTI	475	
Maximum rated withstanding isolation voltage	t = 1 min	V_{ISO}	8200	V_{RMS}
Maximum transient isolation voltage		V_{IOTM}	12 000	V_{peak}
Maximum repetitive peak isolation voltage		V_{IORM}	1450	V_{peak}
Isolation resistance	T_{amb} = 25 °C, V_{IO} = 500 V	R_{IO}	$\geq 10^{12}$	Ω
	T_{amb} = 100 °C, V_{IO} = 500 V	R_{IO}	$\geq 10^{11}$	Ω
	T_{amb} = T_S, V_{IO} = 500 V	R_{IO}	$\geq 10^{9}$	Ω
Output safety power		P_{SO}	250	mW
Input safety current		I_{si}	120	mA
Input safety temperature		T_S	150	°C
Creepage distance			≥ 14	mm
Clearance distance			≥ 14	mm
Insulation thickness		DTI	≥ 3	mm

SWITCHING CHARACTERISTICS (T_{amb} = 25 °C, unless otherwise specified)						
PARAMETER	**TEST CONDITION**	**SYMBOL**	**MIN.**	**TYP.**	**MAX.**	**UNIT**
Delay time	V_S = 5 V, I_C = 5 mA, R_L = 100 Ω, (see Fig. 1)	t_d	-	2.6	-	µs
Rise time	V_S = 5 V, I_C = 5 mA, R_L = 100 Ω, (see Fig. 1)	t_r	-	2.4	-	µs
Fall time	V_S = 5 V, I_C = 5 mA, R_L = 100 Ω, (see Fig. 1)	t_f	-	2.4	-	µs
Storage time	V_S = 5 V, I_C = 5 mA, R_L = 100 Ω, (see Fig. 1)	t_s	-	0.3	-	µs
Turn-on time	V_S = 5 V, I_C = 5 mA, R_L = 100 Ω, (see Fig. 1)	t_{on}	-	5	-	µs
Turn-off time	V_S = 5 V, I_C = 5 mA, R_L = 100 Ω, (see Fig. 1)	t_{off}	-	3	-	µs
Turn-on time	V_S = 5 V, I_F = 10 mA, R_L = 1 kΩ, (see Fig. 2)	t_{on}	-	25	-	µs
Turn-off time	V_S = 5 V, I_F = 10 mA, R_L = 1 kΩ, (see Fig. 2)	t_{off}	-	42.5	-	µs

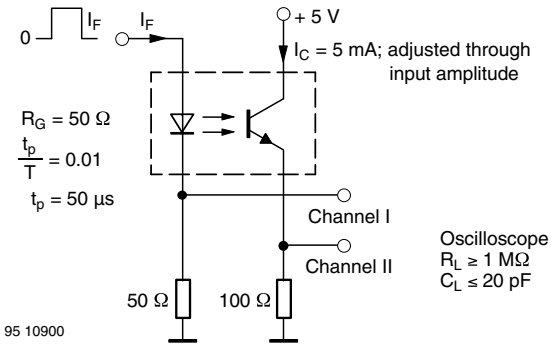

Fig. 1 - Test Circuit, Non-Saturated Operation

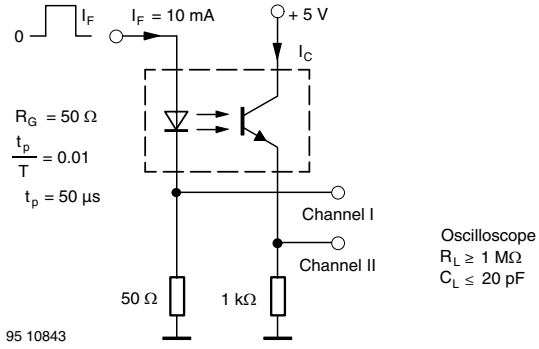

Fig. 2 - Test Circuit, Saturated Operation

For technical questions, contact: optocoupleranswers@vishay.com
THIS DOCUMENT IS SUBJECT TO CHANGE WITHOUT NOTICE. THE PRODUCTS DESCRIBED HEREIN AND THIS DOCUMENT ARE SUBJECT TO SPECIFIC DISCLAIMERS, SET FORTH AT www.vishay.com/doc?91000

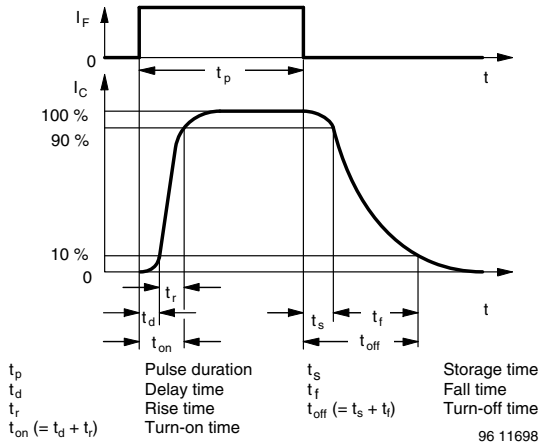

Fig. 3 - Switching Times

TYPICAL CHARACTERISTICS (T_{amb} = 25 °C, unless otherwise specified)

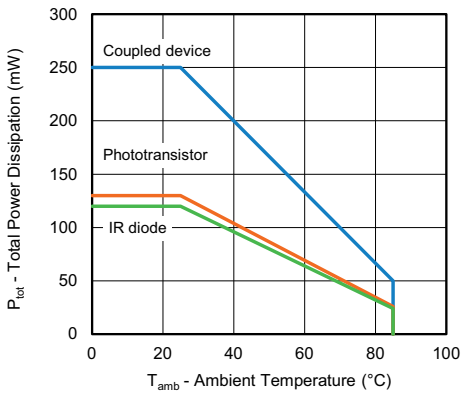

Fig. 4 - Total Power Dissipation vs. Ambient Temperature

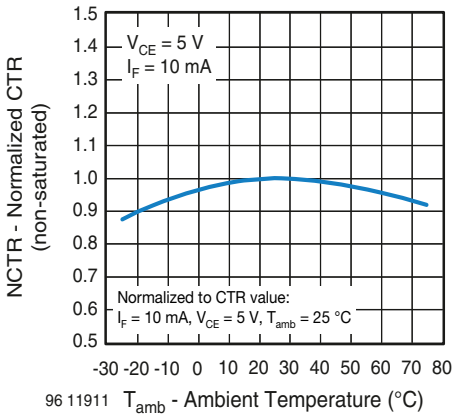

Fig. 6 - Relative Current Transfer Ratio vs. Ambient Temperature

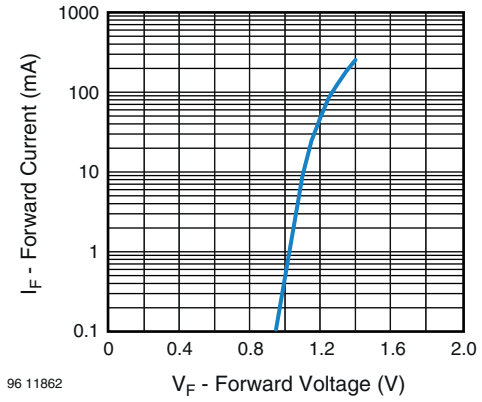

Fig. 5 - Forward Current vs. Forward Voltage

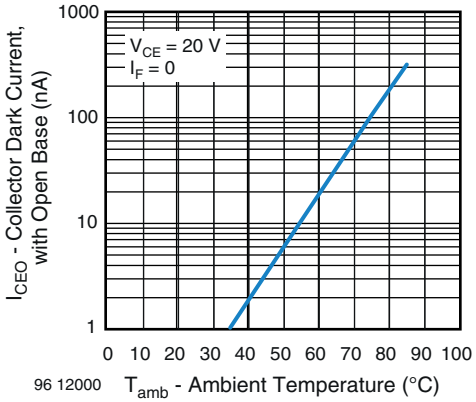

Fig. 7 - Collector Dark Current vs. Ambient Temperature

For technical questions, contact: optocoupleranswers@vishay.com
THIS DOCUMENT IS SUBJECT TO CHANGE WITHOUT NOTICE. THE PRODUCTS DESCRIBED HEREIN AND THIS DOCUMENT ARE SUBJECT TO SPECIFIC DISCLAIMERS, SET FORTH AT www.vishay.com/doc?91000

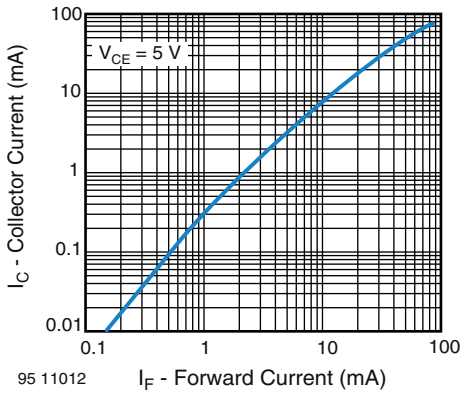

Fig. 8 - Collector Current vs. Forward Current

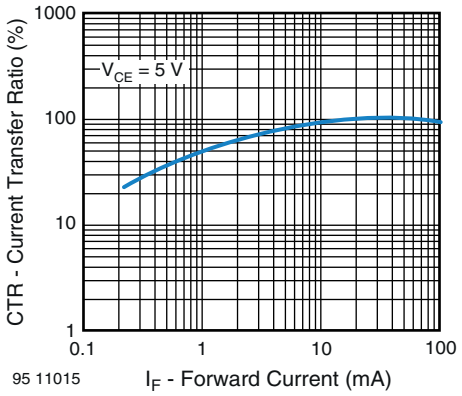

Fig. 11 - Current Transfer Ratio vs. Forward Current

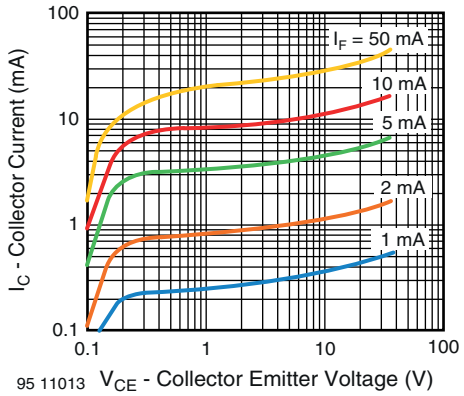

Fig. 9 - Collector Current vs. Collector Emitter Voltage

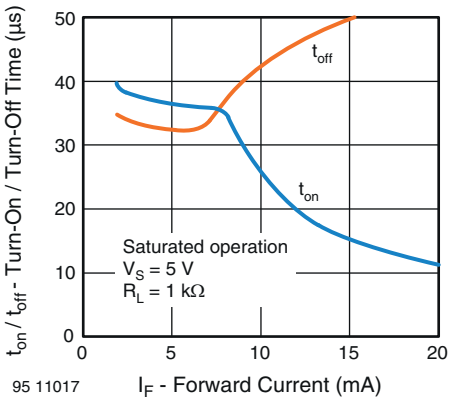

Fig. 12 - Turn-On / Turn-Off Time vs. Forward Current

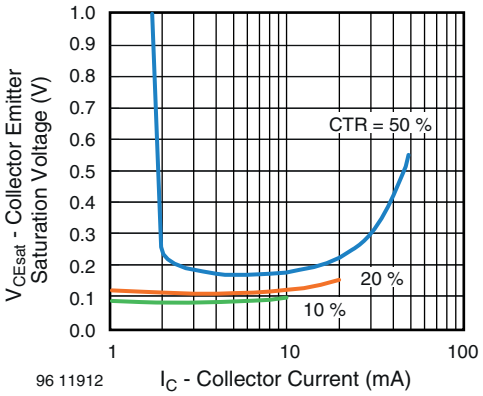

Fig. 10 - Collector Emitter Saturation Voltage vs. Collector Current

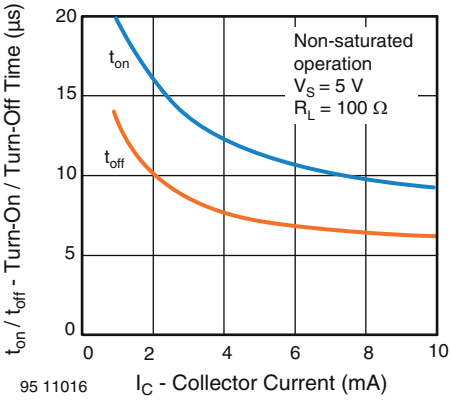

Fig. 13 - Turn-On / Turn-Off Time vs. Collector Current

For technical questions, contact: optocoupleranswers@vishay.com
THIS DOCUMENT IS SUBJECT TO CHANGE WITHOUT NOTICE. THE PRODUCTS DESCRIBED HEREIN AND THIS DOCUMENT ARE SUBJECT TO SPECIFIC DISCLAIMERS, SET FORTH AT www.vishay.com/doc?91000

PACKAGE DIMENSIONS (in millimeters)

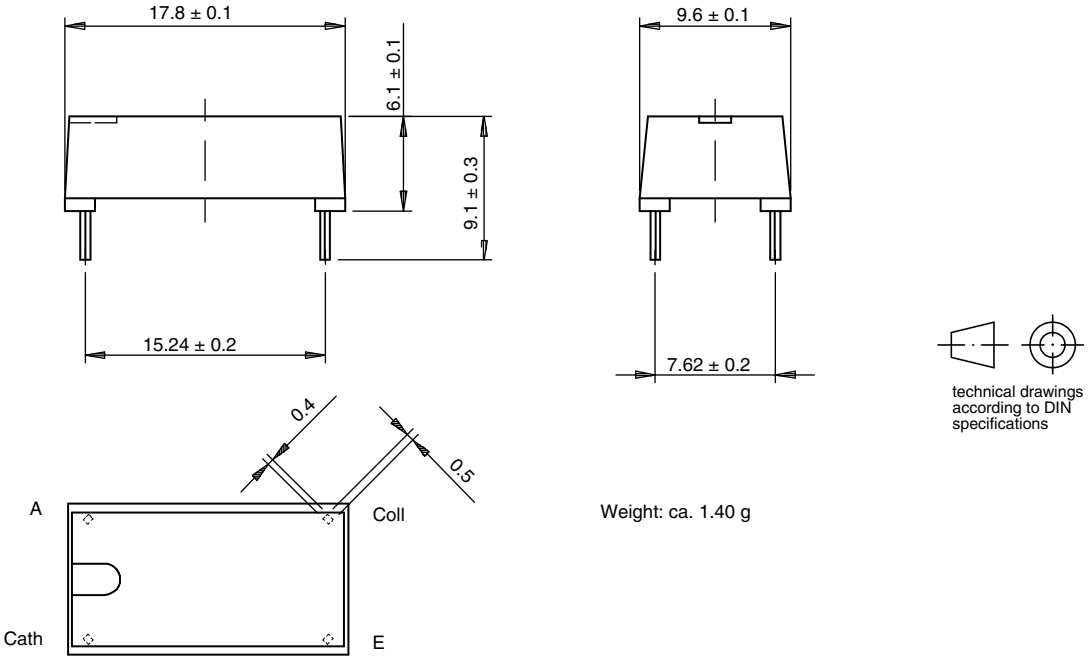

Weight: ca. 1.40 g

Drawing-No.: 6.544-5036.01-1
Issue: 2; 10.11.98
14763

PACKAGE MARKING (example of CNY65BExi)

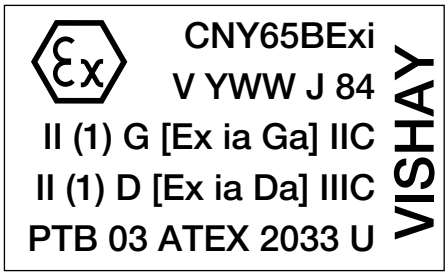

Fig. 14 - Top Marking

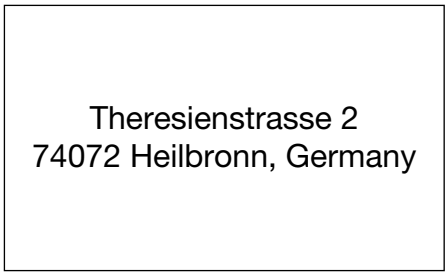

Fig. 15 - Side Marking

TUBE INFORMATION			
TYPE	UNITS/TUBE	TUBES/BOX	UNITS/BOX
CNY65Exi	30	35	1050

For technical questions, contact: optocoupleranswers@vishay.com
THIS DOCUMENT IS SUBJECT TO CHANGE WITHOUT NOTICE. THE PRODUCTS DESCRIBED HEREIN AND THIS DOCUMENT ARE SUBJECT TO SPECIFIC DISCLAIMERS, SET FORTH AT www.vishay.com/doc?91000

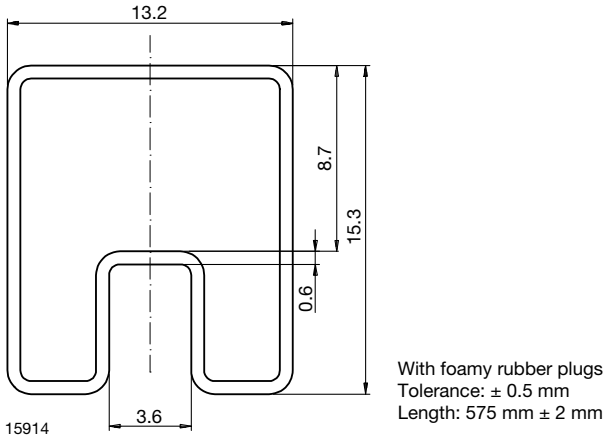

Fig. 16 - CNY65Exi

SOLDER PROFILES

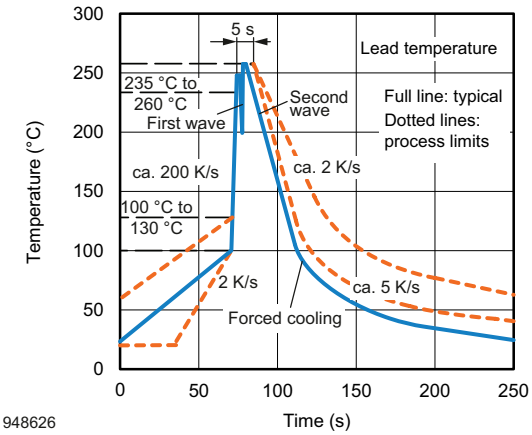

Fig. 17 - Wave Soldering Double Wave Profile According to J-STD-020 for Through-Hole Devices

HANDLING AND STORAGE CONDITIONS

ESD level: HBM class 2

Floor life: unlimited

Conditions: T_{amb} < 30 °C, RH < 85 %

Moisture sensitivity level 1, according to J-STD-020

For technical questions, contact: optocoupleranswers@vishay.com
THIS DOCUMENT IS SUBJECT TO CHANGE WITHOUT NOTICE. THE PRODUCTS DESCRIBED HEREIN AND THIS DOCUMENT ARE SUBJECT TO SPECIFIC DISCLAIMERS, SET FORTH AT www.vishay.com/doc?91000

Disclaimer

ALL PRODUCT, PRODUCT SPECIFICATIONS AND DATA ARE SUBJECT TO CHANGE WITHOUT NOTICE TO IMPROVE RELIABILITY, FUNCTION OR DESIGN OR OTHERWISE.

Vishay Intertechnology, Inc., its affiliates, agents, and employees, and all persons acting on its or their behalf (collectively, “Vishay”), disclaim any and all liability for any errors, inaccuracies or incompleteness contained in any datasheet or in any other disclosure relating to any product.

Vishay makes no warranty, representation or guarantee regarding the suitability of the products for any particular purpose or the continuing production of any product. To the maximum extent permitted by applicable law, Vishay disclaims (i) any and all liability arising out of the application or use of any product, (ii) any and all liability, including without limitation special, consequential or incidental damages, and (iii) any and all implied warranties, including warranties of fitness for particular purpose, non-infringement and merchantability.

Statements regarding the suitability of products for certain types of applications are based on Vishay's knowledge of typical requirements that are often placed on Vishay products in generic applications. Such statements are not binding statements about the suitability of products for a particular application. It is the customer's responsibility to validate that a particular product with the properties described in the product specification is suitable for use in a particular application. Parameters provided in datasheets and / or specifications may vary in different applications and performance may vary over time. All operating parameters, including typical parameters, must be validated for each customer application by the customer's technical experts. Product specifications do not expand or otherwise modify Vishay's terms and conditions of purchase, including but not limited to the warranty expressed therein.

Hyperlinks included in this datasheet may direct users to third-party websites. These links are provided as a convenience and for informational purposes only. Inclusion of these hyperlinks does not constitute an endorsement or an approval by Vishay of any of the products, services or opinions of the corporation, organization or individual associated with the third-party website. Vishay disclaims any and all liability and bears no responsibility for the accuracy, legality or content of the third-party website or for that of subsequent links.

Vishay products are not designed for use in life-saving or life-sustaining applications or any application in which the failure of the Vishay product could result in personal injury or death unless specifically qualified in writing by Vishay. Customers using or selling Vishay products not expressly indicated for use in such applications do so at their own risk. Please contact authorized Vishay personnel to obtain written terms and conditions regarding products designed for such applications.

No license, express or implied, by estoppel or otherwise, to any intellectual property rights is granted by this document or by any conduct of Vishay. Product names and markings noted herein may be trademarks of their respective owners.

© 2024 VISHAY INTERTECHNOLOGY, INC. ALL RIGHTS RESERVED

THIS DOCUMENT IS SUBJECT TO CHANGE WITHOUT NOTICE. THE PRODUCTS DESCRIBED HEREIN AND THIS DOCUMENT ARE SUBJECT TO SPECIFIC DISCLAIMERS, SET FORTH AT www.vishay.com/doc?91000