Optocoupler, Phototransistor Output, with Base Connection

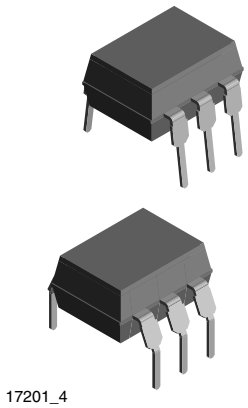

17201_4

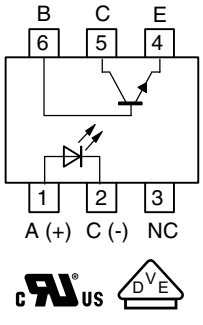

18537_5

DESCRIPTION

The CNY75A, CNY75B, CNY75C, CNY75GA, CNY75GB, CNY75GC consists of a phototransistor optically coupled to a gallium arsenide infrared-emitting diode in a 6 pin plastic dual inline package.

AGENCY APPROVALS

- UL1577, file no. E52744, double protection
- BSI: BS EN 41003, BS EN 60095 (BS 415), BS EN 60950 (BS 7002), pending
- DIN EN 60747-5-5 (VDE 0884)
- FIMKO (SETI): EN 60950, certificate no. FI25155

FEATURES

- Isolation materials according to UL 94-VO
- Pollution degree 2 (DIN/VDE 0110/resp. IEC 60664)
- Climatic classification 55/110/21 (IEC 60068 part 1)
- Low temperature coefficient of CTR
- CTR offered in 3 groups
- Rated isolation voltage (RMS includes DC) V_{IOWM} = 600 V_{RMS} (848 V peak)
- Rated recurring peak voltage (repetitive) V_{IORM} = 600 V_{RMS}
- Rated impulse voltage (transient overvoltage) V_{IOTM} = 6 kV_{peak}
- Isolation test voltage (partial discharge test voltage) V_{pd} = 1.6 kV
- Creepage current resistance according to VDE 0303/ IEC 60112 comparative tracking index: CTI ≥ 325
- Thickness through insulation ≥ 0.4 mm
- Compliant to RoHS directive 2002/95/EC and in accordance to WEEE 2002/96/EC

Pb-free

e3

RoHS COMPLIANT

APPLICATIONS

- Switch-mode power supplies
- Line receiver
- Computer peripheral interface
- Microprocessor system interface
- Circuits for safe protective separation against electrical shock according to safety class II (reinforced isolation):
  - for appl. class I - IV at mains voltage ≤ 300 V
  - for appl. class I - III at mains voltage ≤ 600 V
  according to DIN EN 60747-5-5 (VDE 0884)

ORDER INFORMATION [1]

PART	REMARKS
CNY75A	CTR 63 % to 125 %, DIP-6
CNY75B	CTR 100 % to 200 %, DIP-6
CNY75C	CTR 160 % to 320 %, DIP-6
CNY75GA	CTR 63 % to 125 %, DIP-6, 400 mil
CNY75GB	CTR 100 % to 200 %, DIP-6, 400 mil
CNY75GC	CTR 160 % to 320 %, DIP-6, 400 mil

Note

[1] G = leadform 10.16 mm; G is not marked on the body.

ABSOLUTE MAXIMUM RATINGS (1)

PARAMETER	TEST CONDITION	SYMBOL	VALUE	UNIT
INPUT				
Reverse voltage		V_R	5	V
Forward current		I_F	60	mA
Forward surge current	$t_p \leq 10$ µs	I_{FSM}	3	A
Power dissipation		P_{diss}	70	mW
Junction temperature		T_j	125	°C
OUTPUT				
Collector base voltage		V_{CBO}	70	V
Collector emitter voltage		V_{CEO}	70	V
Emitter collector voltage		V_{ECO}	7	V
Collector current		I_C	50	mA
Collector peak current	$t_p/T = 0.5$, $t_p \leq 10$ ms	I_{CM}	100	mA
Power dissipation		P_{diss}	70	mW
Junction temperature		T_j	125	°C
COUPLER				
AC isolation test voltage (RMS)		V_{ISO}	5000	V_{RMS}
Total power dissipation		P_{tot}	200	mW
Ambient temperature range		T_{amb}	- 55 to + 110	°C
Storage temperature range		T_{stg}	- 55 to + 125	°C
Soldering temperature (2)	2 mm from case, t ≤ 10 s	T_{sld}	260	°C

Notes

(1) T_{amb} = 25 °C, unless otherwise specified.
Stresses in excess of the absolute maximum ratings can cause permanent damage to the device. Functional operation of the device is not implied at these or any other conditions in excess of those given in the operational sections of this document. Exposure to absolute maximum ratings for extended periods of the time can adversely affect reliability.

(2) Refer to wave profile for soldering conditions for through hole devices.

ELECTRICAL CHARACTERISTCS (1)

PARAMETER	TEST CONDITION	PART	SYMBOL	MIN.	TYP.	MAX.	UNIT
INPUT							
Forward voltage	I_F = 50 mA		V_F		1.25	1.6	V
Reverse current	V_R = 6 V		I_R			10	µA
Junction capacitance	V_R = 0 V, f = 1 MHz		C_j		50		pF
OUTPUT							
Collector base voltage	I_C = 100 µA		V_{CBO}	70			V
Collector emitter voltage	I_C = 1 mA		V_{CEO}	70			V
Emitter collector voltage	I_E = 100 µA		V_{ECO}	7			V
Collector emitter leakage current	V_{CE} = 20 V, I_F = 0 A		I_{CEO}			150	nA
COUPLER							
Collector emitter saturation voltage	I_F = 10 mA, I_C = 1 mA		V_{CEsat}			0.3	V
Cut-off frequency	V_{CE} = 5 V, I_F = 10 mA, R_L = 100 Ω		f_c		110		kHz
Coupling capacitance	f = 1 MHz		C_k		0.6		pF

Note

(1) T_{amb} = 25 °C, unless otherwise specified.
Minimum and maximum values were tested requierements. Typical values are characteristics of the device and are the result of engineering evaluations. Typical values are for information only and are not part of the testing requirements.

CURRENT TRANSFER RATIO

PARAMETER	TEST CONDITION	PART	SYMBOL	MIN.	TYP.	MAX.	UNIT
I_C/I_F	V_{CE} = 5 V, I_F = 1 mA	CNY75GA	CTR	15			%
		CNY75GB	CTR	30			%
		CNY75GC	CTR	60			%
	V_{CE} = 5 V, I_F = 10 mA	CNY75GA	CTR	63		125	%
		CNY75GB	CTR	100		200	%
		CNY75GC	CTR	160		320	%

SWITCHING CHARACTERISTICS

PARAMETER	TEST CONDITION	PART	SYMBOL	MIN.	TYP.	MAX.	UNIT
Current time	V_{CC} = 5 V, R_L = 100 Ω	CNY75GA	I_F		10		mA
		CNY75GB	I_F		10		mA
		CNY75GC	I_F		10		mA
Delay time	V_{CC} = 5 V, R_L = 100 Ω	CNY75GA	t_d		2		µs
		CNY75GB	t_d		2.5		µs
		CNY75GC	t_d		2.8		µs
Rise time	V_{CC} = 5 V, R_L = 100 Ω	CNY75GA	t_r		2.5		µs
		CNY75GB	t_r		3		µs
		CNY75GC	t_r		4.2		µs
Fall time	V_{CC} = 5 V, R_L = 100 Ω	CNY75GA	t_f		2.7		µs
		CNY75GB	t_f		3.7		µs
		CNY75GC	t_f		4.7		µs
Storage time	V_{CC} = 5 V, R_L = 100 Ω	CNY75GA	t_s		0.3		µs
		CNY75GB	t_s		0.3		µs
		CNY75GC	t_s		0.3		µs
Turn-on time	V_{CC} = 5 V, R_L = 100 Ω	CNY75GA	t_{on}		4.5		µs
		CNY75GB	t_{on}		5.5		µs
		CNY75GC	t_{on}		7		µs
Turn-off time	V_{CC} = 5 V, R_L = 100 Ω	CNY75GA	t_{off}		3		µs
		CNY75GB	t_{off}		4		µs
		CNY75GC	t_{off}		5		µs
Turn-on time	V_{CC} = 5 V, R_L = 1 kΩ	CNY75GA	t_{on}		10		µs
		CNY75GB	t_{on}		16.5		µs
		CNY75GC	t_{on}		11		µs
Turn-off time	V_{CC} = 5 V, R_L = 1 kΩ	CNY75GA	t_{off}		25		µs
		CNY75GB	t_{off}		20		µs
		CNY75GC	t_{off}		37.5		µs

MAXIMUM SAFETY RATINGS (1)						
PARAMETER	**TEST CONDITION**	**SYMBOL**	**MIN.**	**TYP.**	**MAX.**	**UNIT**
INPUT						
Forward current		I_F			130	mA
OUTPUT						
Power dissipation		P_{diss}			265	mW
COUPLER						
Rated impulse voltage		V_{IOTM}			6	kV
Safety temperature		T_{si}			150	°C

Note

(1) According DIN EN 60747-5-5. This optocoupler is suitable for safe electrical isolation only within the safety ratings. Compliance with the safety ratings shall be ensured by means of suitable protective circuits.

INSULATION RATED PARAMETERS						
PARAMETER	**TEST CONDITION**	**SYMBOL**	**MIN.**	**TYP.**	**MAX.**	**UNIT**
Partial discharge test voltage - routine test	100 %, t_{test} = 1 s	V_{pd}	1.6			kV
Partial discharge test voltage - lot test (sample test)	t_{Tr} = 60 s, t_{test} = 10 s, (see figure 1)	V_{IOTM}	6			kV
		V_{pd}	1.3			kV
Insulation resistance	V_{IO} = 500 V	R_{IO}	10^{12}			Ω
	V_{IO} = 500 V, $T_{amb} \leq$ 100 °C	R_{IO}	10^{11}			Ω
	V_{IO} = 500 V, $T_{amb} \leq$ 150 °C (construction test only)	R_{IO}	10^{9}			Ω

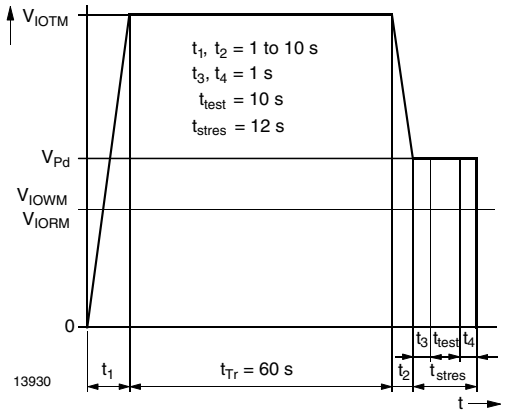

Fig. 1 - Test Pulse Diagram for Sample Test according to DIN EN 60747-5-5 (VDE 0884)/DIN EN 60747-; IEC60747

PACKAGE DIMENSIONS in millimeters

DIP-6

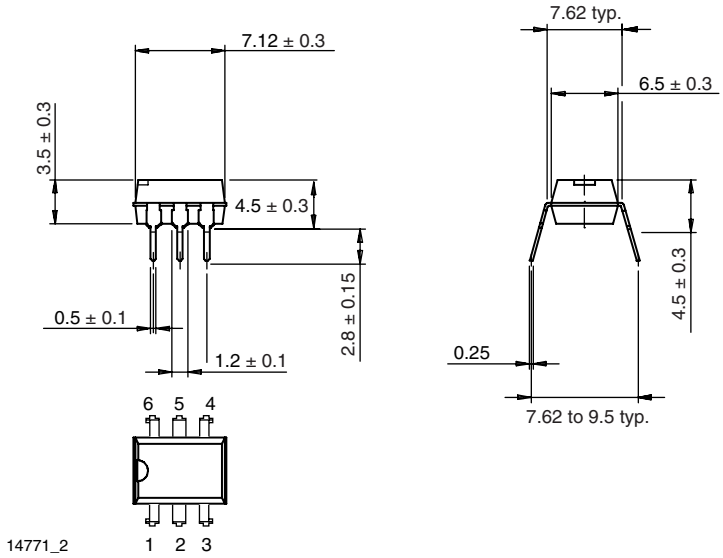

DIP-6, 400 mil

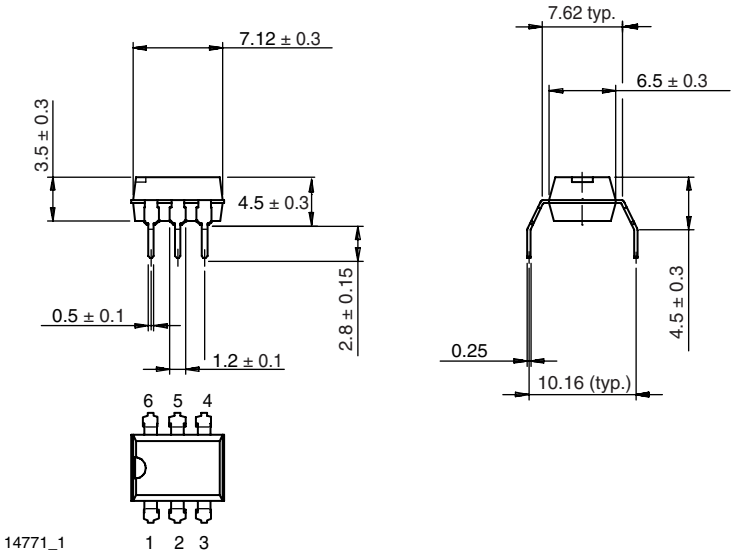

PACKAGE MARKING

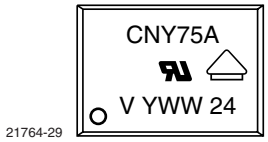

Disclaimer

ALL PRODUCT, PRODUCT SPECIFICATIONS AND DATA ARE SUBJECT TO CHANGE WITHOUT NOTICE TO IMPROVE RELIABILITY, FUNCTION OR DESIGN OR OTHERWISE.

Vishay Intertechnology, Inc., its affiliates, agents, and employees, and all persons acting on its or their behalf (collectively, “Vishay”), disclaim any and all liability for any errors, inaccuracies or incompleteness contained in any datasheet or in any other disclosure relating to any product.

Vishay makes no warranty, representation or guarantee regarding the suitability of the products for any particular purpose or the continuing production of any product. To the maximum extent permitted by applicable law, Vishay disclaims (i) any and all liability arising out of the application or use of any product, (ii) any and all liability, including without limitation special, consequential or incidental damages, and (iii) any and all implied warranties, including warranties of fitness for particular purpose, non-infringement and merchantability.

Statements regarding the suitability of products for certain types of applications are based on Vishay's knowledge of typical requirements that are often placed on Vishay products in generic applications. Such statements are not binding statements about the suitability of products for a particular application. It is the customer's responsibility to validate that a particular product with the properties described in the product specification is suitable for use in a particular application. Parameters provided in datasheets and / or specifications may vary in different applications and performance may vary over time. All operating parameters, including typical parameters, must be validated for each customer application by the customer's technical experts. Product specifications do not expand or otherwise modify Vishay's terms and conditions of purchase, including but not limited to the warranty expressed therein.

Hyperlinks included in this datasheet may direct users to third-party websites. These links are provided as a convenience and for informational purposes only. Inclusion of these hyperlinks does not constitute an endorsement or an approval by Vishay of any of the products, services or opinions of the corporation, organization or individual associated with the third-party website. Vishay disclaims any and all liability and bears no responsibility for the accuracy, legality or content of the third-party website or for that of subsequent links.

Vishay products are not designed for use in life-saving or life-sustaining applications or any application in which the failure of the Vishay product could result in personal injury or death unless specifically qualified in writing by Vishay. Customers using or selling Vishay products not expressly indicated for use in such applications do so at their own risk. Please contact authorized Vishay personnel to obtain written terms and conditions regarding products designed for such applications.

No license, express or implied, by estoppel or otherwise, to any intellectual property rights is granted by this document or by any conduct of Vishay. Product names and markings noted herein may be trademarks of their respective owners.

© 2024 VISHAY INTERTECHNOLOGY, INC. ALL RIGHTS RESERVED

THIS DOCUMENT IS SUBJECT TO CHANGE WITHOUT NOTICE. THE PRODUCTS DESCRIBED HEREIN AND THIS DOCUMENT ARE SUBJECT TO SPECIFIC DISCLAIMERS, SET FORTH AT www.vishay.com/doc?91000