Optocoupler, Phototransistor Output, With Base Connection

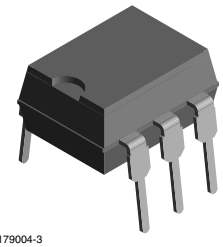

i179004-3

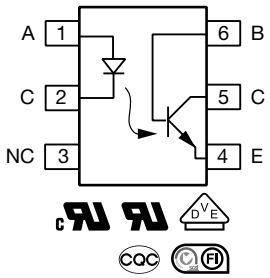

FEATURES

- Interfaces with common logic families
- Input-output coupling capacitance < 0.5 pF
- Industry standard dual-in line 6-pin package
- Isolation rated voltage 4420 V_{RMS}
- Material categorization: for definitions of compliance please see www.vishay.com/doc?99912

Pb-free

e3

RoHS COMPLIANT

LINKS TO ADDITIONAL RESOURCES

Product Page | Design Tools | SPICE Models | Footprints | Schematics

DESCRIPTION

The H11A1 is an industry standard single channel phototransistor coupler.

Each optocoupler consists of gallium arsenide infrared LED and a silicon NPN phototransistor.

The isolation performance is accomplished through Vishay double molding isolation manufacturing process. Compliance to DIN EN 60747-5-5 partial discharge isolation specification is available is by ordering option 1.

These isolation processes and the Vishay ISO9001 quality program results in the highest isolation performance available for a commercial plastic phototransistor optocoupler.

The devices are available in lead formed configuration suitable for surface mounting and are available either on tape and reel, or in standard tube shipping containers.

Note

- Designing with datasheet is covered in Application Note 45

APPLICATIONS

- AC mains detection
- Reed relay driving
- Switch mode power supply feedback
- Telephone ring detection
- Logic ground isolation
- Logic coupling with high frequency noise rejection

AGENCY APPROVALS

- UL 1577
- cUL
- DIN EN 60747-5-5 (VDE 0884-5), available with option 1
- BSI EN 62368-1
- CQC GB 4943.1
- CQC GB 8898
- FIMKO

ORDERING INFORMATION

H	1	1	A	#	-	X	0	0	#	X
PART NUMBER						PACKAGE OPTION				TAPE AND REEL

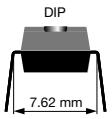

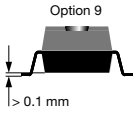

AGENCY CERTIFIED / PACKAGE	CTR (%)
UL, cUL, BSI, CSA, FIMKO, CQC	**> 50**
DIP-6	H11A1
SMD-6, option 9	H11A1-X009T

Note

- Additional options may be possible, please contact sales office

For technical questions, contact: optocoupleranswers@vishay.com

THIS DOCUMENT IS SUBJECT TO CHANGE WITHOUT NOTICE. THE PRODUCTS DESCRIBED HEREIN AND THIS DOCUMENT ARE SUBJECT TO SPECIFIC DISCLAIMERS, SET FORTH AT www.vishay.com/doc?91000

ABSOLUTE MAXIMUM RATINGS (T_{amb} = 25 °C, unless otherwise specified)				
PARAMETER	**TEST CONDITION**	**SYMBOL**	**VALUE**	**UNIT**
INPUT				
Reverse voltage		V_R	6	V
Forward current		I_F	60	mA
Surge current	t ≤ 10 µs	I_{FSM}	2.5	A
Power dissipation		P_{diss}	100	mW
OUTPUT				
Collector emitter breakdown voltage		V_{CEO}	70	V
Emitter base breakdown voltage		V_{EBO}	7	V
Collector current		I_C	50	mA
	t < 1 ms	I_C	100	mA
Power dissipation		P_{diss}	150	mW
COUPLER				
Storage temperature range		T_{stg}	-55 to +150	°C
Operating temperature range		T_{amb}	-55 to +100	°C
Junction temperature		T_j	100	°C
Soldering temperature	Max. 10 s, dip soldering: distance to seating plane ≥ 1.5 mm	T_{sld}	260	°C

Note

- Stresses in excess of the absolute maximum ratings can cause permanent damage to the device. Functional operation of the device is not implied at these or any other conditions in excess of those given in the operational sections of this document. Exposure to absolute maximum ratings for extended periods of the time can adversely affect reliability.

ELECTRICAL CHARACTERISTICS (T_{amb} = 25 °C, unless otherwise specified)						
PARAMETER	**TEST CONDITION**	**SYMBOL**	**MIN.**	**TYP.**	**MAX.**	**UNIT**
INPUT						
Forward voltage	I_F = 10 mA	V_F	-	1.1	1.5	V
Reverse current	V_R = 3 V	I_R	-	-	10	µA
Capacitance	V_R = 0 V, f = 1 MHz	C_O	-	50	-	pF
OUTPUT						
Collector emitter breakdown voltage	I_C = 1 mA, I_F = 0 mA	BV_{CEO}	30	-	-	V
Emitter collector breakdown voltage	I_E = 100 µA, I_F = 0 mA	BV_{ECO}	7	-	-	V
Collector base breakdown voltage	I_C = 10 µA, I_F = 0 mA	BV_{CBO}	70	-	-	V
Collector emitter leakage current	V_{CE} = 10 V, I_F = 0 mA	I_{CEO}	-	5	50	nA
Emitter collector capacitance	V_{CE} = 0 V	C_{CE}	-	6	-	pF
COUPLER						
Collector emitter, saturation voltage	I_{CE} = 0.5 mA, I_F = 10 mA	V_{CEsat}	-	-	0.4	V
Capacitance (input-output)		C_{IO}	-	0.5	-	pF

Note

- Minimum and maximum values were tested requirements. Typical values are characteristics of the device and are the result of engineering evaluations. Typical values are for information only and are not part of the testing requirements.

CURRENT TRANSFER RATIO						
PARAMETER	**TEST CONDITION**	**SYMBOL**	**MIN.**	**TYP.**	**MAX.**	**UNIT**
I_C/I_F	V_{CE} = 10 V, I_F = 10 mA	CTR_{DC}	50	-	-	%

SWITCHING CHARACTERISTICS						
PARAMETER	**TEST CONDITION**	**SYMBOL**	**MIN.**	**TYP.**	**MAX.**	**UNIT**
Turn-on time	I_C = 2 mA, R_L = 100 Ω, V_{CE} = 10 V	t_{on}	-	3	-	µs
Turn-off time		t_{off}	-	3	-	µs

For technical questions, contact: optocoupleranswers@vishay.com
THIS DOCUMENT IS SUBJECT TO CHANGE WITHOUT NOTICE. THE PRODUCTS DESCRIBED HEREIN AND THIS DOCUMENT ARE SUBJECT TO SPECIFIC DISCLAIMERS, SET FORTH AT www.vishay.com/doc?91000

SAFETY AND INSULATION RATINGS				
PARAMETER	**TEST CONDITION**	**SYMBOL**	**VALUE**	**UNIT**
Climatic classification	According to IEC 68 part 1		55 / 100 / 21	
Comparative tracking index		CTI	175	
Maximum rated withstanding isolation voltage	t = 1 min	V_{ISO}	4420	V_{RMS}
Maximum transient isolation voltage		V_{IOTM}	8000	V_{peak}
Maximum repetitive peak isolation voltage		V_{IORM}	890	V_{peak}
Isolation resistance	V_{IO} = 500 V, T_{amb} = 25 °C	R_{IO}	$\geq 10^{12}$	Ω
	V_{IO} = 500 V, T_{amb} = 100 °C	R_{IO}	$\geq 10^{11}$	Ω
Output safety power		P_{SO}	700	mW
Input safety current		I_{SI}	400	mA
Safety temperature		T_S	175	°C
Creepage distance			≥ 7	mm
Clearance distance			≥ 7	mm
Insulation thickness		DTI	≥ 0.4	mm

Note

- As per IEC 60747-5-5, § 7.4.3.8.2, this optocoupler is suitable for “safe electrical insulation” only within the safety ratings. Compliance with the safety ratings shall be ensured by means of protective circuits.

TYPICAL CHARACTERISTICS (T_{amb} = 25 °C, unless otherwise specified)

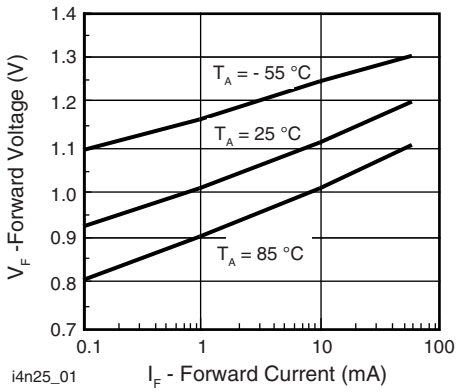

Fig. 1 - Forward Voltage vs. Forward Current

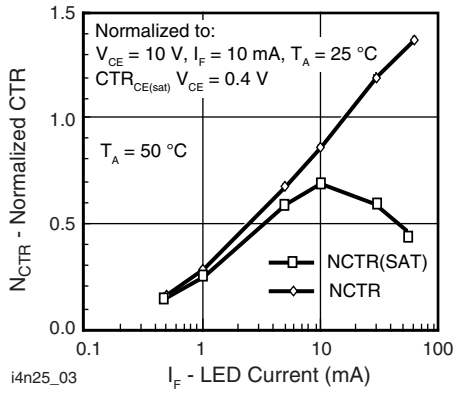

Fig. 3 - Normalized Non-Saturated and Saturated CTR vs. LED Current

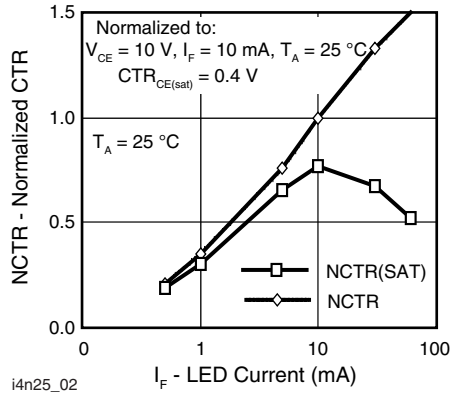

Fig. 2 - Normalized Non-Saturated and Saturated CTR vs. LED Current

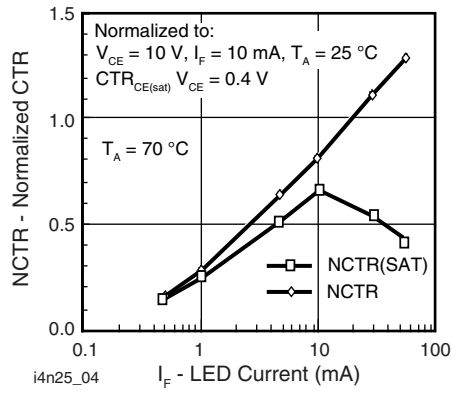

Fig. 4 - Normalized Non-Saturated and Saturated CTR vs. LED Current

For technical questions, contact: optocoupleranswers@vishay.com
THIS DOCUMENT IS SUBJECT TO CHANGE WITHOUT NOTICE. THE PRODUCTS DESCRIBED HEREIN AND THIS DOCUMENT ARE SUBJECT TO SPECIFIC DISCLAIMERS, SET FORTH AT www.vishay.com/doc?91000

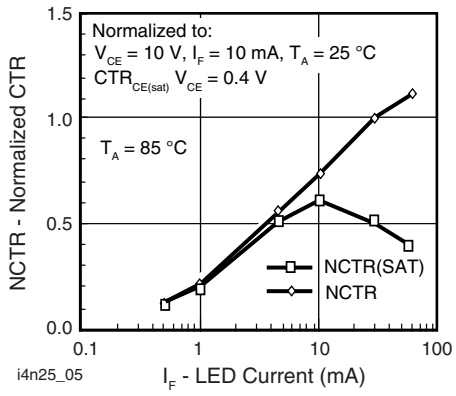

Fig. 5 - Normalized Non-Saturated and Saturated CTR vs. LED Current

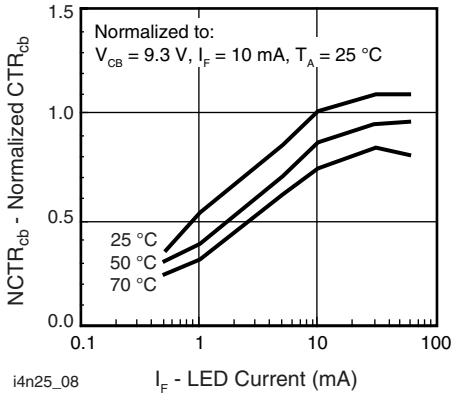

Fig. 8 - Normalized CTR_{cb} vs. LED Current and Temperature

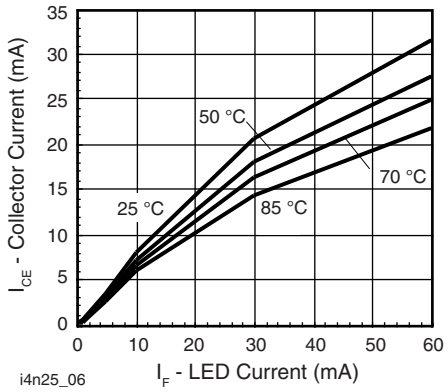

Fig. 6 - Collector Emitter Current vs. Temperature and LED Current

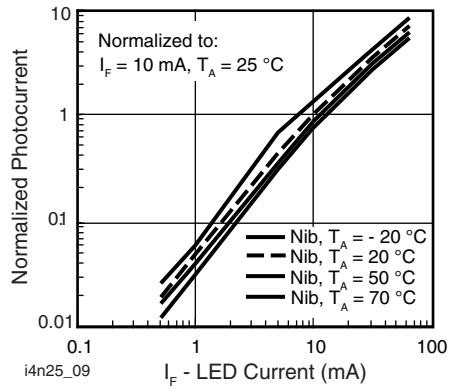

Fig. 9 - Normalized Photocurrent vs. I_F and Temperature

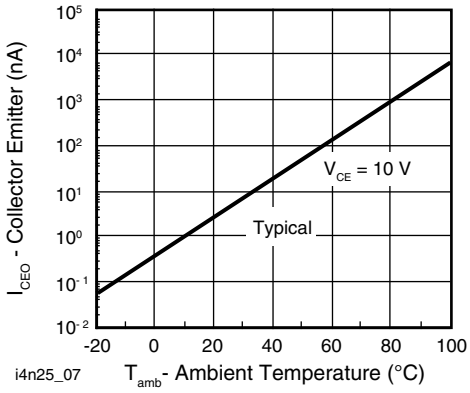

Fig. 7 - Collector Emitter Leakage Current vs. Temperature

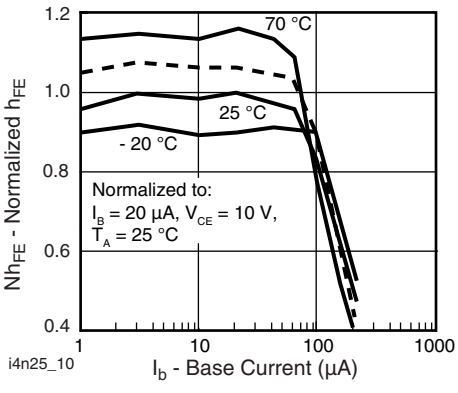

Fig. 10 - Normalized Non-Saturated h_{FE} vs. Base Current and Temperature

For technical questions, contact: optocoupleranswers@vishay.com
THIS DOCUMENT IS SUBJECT TO CHANGE WITHOUT NOTICE. THE PRODUCTS DESCRIBED HEREIN AND THIS DOCUMENT ARE SUBJECT TO SPECIFIC DISCLAIMERS, SET FORTH AT www.vishay.com/doc?91000

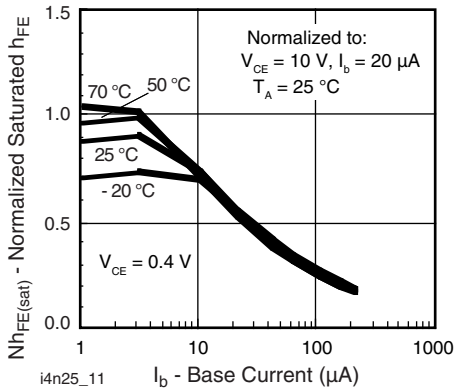

Fig. 11 - Normalized HFE vs. Base Current and Temperature

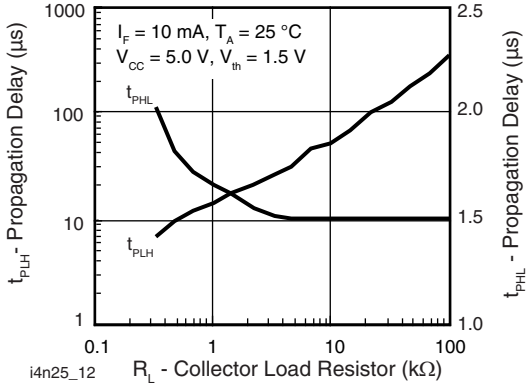

Fig. 12 - Propagation Delay vs. Collector Load Resistor

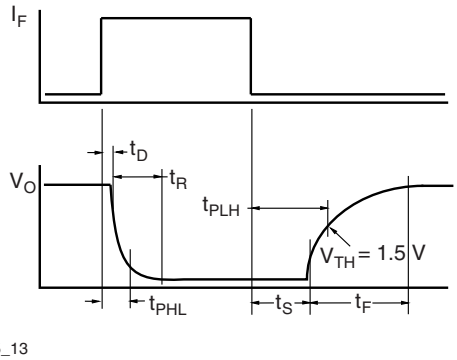

Fig. 13 - Switching Timing

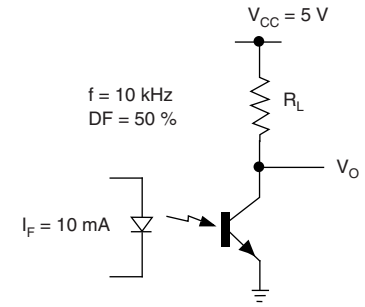

Fig. 14 - Switching Schematic

For technical questions, contact: optocoupleranswers@vishay.com
THIS DOCUMENT IS SUBJECT TO CHANGE WITHOUT NOTICE. THE PRODUCTS DESCRIBED HEREIN AND THIS DOCUMENT ARE SUBJECT TO SPECIFIC DISCLAIMERS, SET FORTH AT www.vishay.com/doc?91000

PACKAGE DIMENSIONS in millimeters

DIP-6

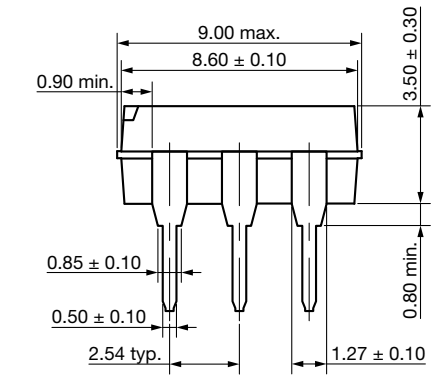

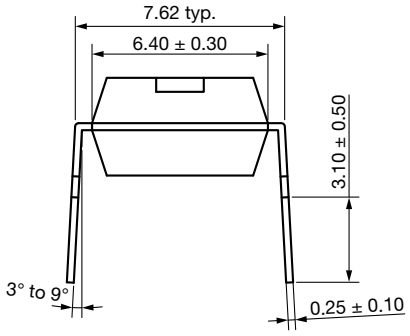

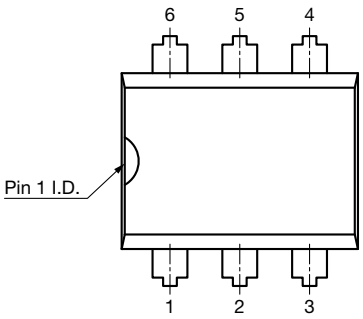

Option 9

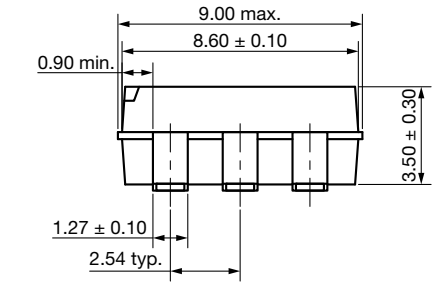

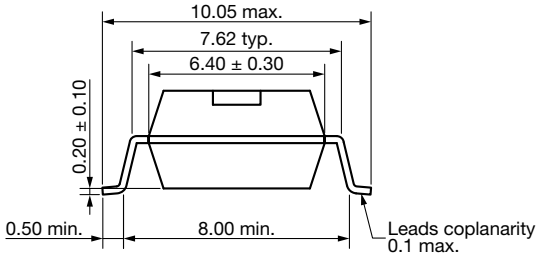

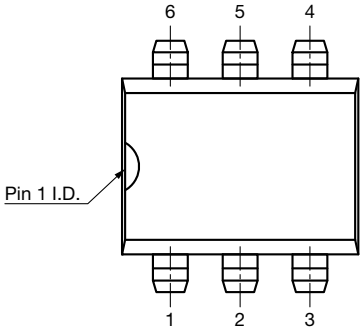

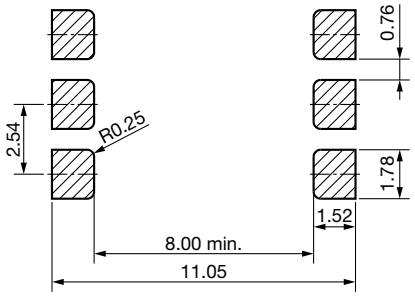

For technical questions, contact: optocoupleranswers@vishay.com
THIS DOCUMENT IS SUBJECT TO CHANGE WITHOUT NOTICE. THE PRODUCTS DESCRIBED HEREIN AND THIS DOCUMENT ARE SUBJECT TO SPECIFIC DISCLAIMERS, SET FORTH AT www.vishay.com/doc?91000

PACKAGE MARKING

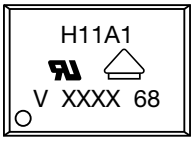

Notes

- XXXX = LMC (lot marking code)
- Only options 1 and 7 are reflected in the package marking
- The VDE Logo is only marked on option1 parts
- Tape and reel suffix (T) is not part of the package marking

For technical questions, contact: optocoupleranswers@vishay.com
THIS DOCUMENT IS SUBJECT TO CHANGE WITHOUT NOTICE. THE PRODUCTS DESCRIBED HEREIN AND THIS DOCUMENT ARE SUBJECT TO SPECIFIC DISCLAIMERS, SET FORTH AT www.vishay.com/doc?91000

Disclaimer

ALL PRODUCT, PRODUCT SPECIFICATIONS AND DATA ARE SUBJECT TO CHANGE WITHOUT NOTICE TO IMPROVE RELIABILITY, FUNCTION OR DESIGN OR OTHERWISE.

Vishay Intertechnology, Inc., its affiliates, agents, and employees, and all persons acting on its or their behalf (collectively, “Vishay”), disclaim any and all liability for any errors, inaccuracies or incompleteness contained in any datasheet or in any other disclosure relating to any product.

Vishay makes no warranty, representation or guarantee regarding the suitability of the products for any particular purpose or the continuing production of any product. To the maximum extent permitted by applicable law, Vishay disclaims (i) any and all liability arising out of the application or use of any product, (ii) any and all liability, including without limitation special, consequential or incidental damages, and (iii) any and all implied warranties, including warranties of fitness for particular purpose, non-infringement and merchantability.

Statements regarding the suitability of products for certain types of applications are based on Vishay's knowledge of typical requirements that are often placed on Vishay products in generic applications. Such statements are not binding statements about the suitability of products for a particular application. It is the customer's responsibility to validate that a particular product with the properties described in the product specification is suitable for use in a particular application. Parameters provided in datasheets and / or specifications may vary in different applications and performance may vary over time. All operating parameters, including typical parameters, must be validated for each customer application by the customer's technical experts. Product specifications do not expand or otherwise modify Vishay's terms and conditions of purchase, including but not limited to the warranty expressed therein.

Hyperlinks included in this datasheet may direct users to third-party websites. These links are provided as a convenience and for informational purposes only. Inclusion of these hyperlinks does not constitute an endorsement or an approval by Vishay of any of the products, services or opinions of the corporation, organization or individual associated with the third-party website. Vishay disclaims any and all liability and bears no responsibility for the accuracy, legality or content of the third-party website or for that of subsequent links.

Vishay products are not designed for use in life-saving or life-sustaining applications or any application in which the failure of the Vishay product could result in personal injury or death unless specifically qualified in writing by Vishay. Customers using or selling Vishay products not expressly indicated for use in such applications do so at their own risk. Please contact authorized Vishay personnel to obtain written terms and conditions regarding products designed for such applications.

No license, express or implied, by estoppel or otherwise, to any intellectual property rights is granted by this document or by any conduct of Vishay. Product names and markings noted herein may be trademarks of their respective owners.

© 2024 VISHAY INTERTECHNOLOGY, INC. ALL RIGHTS RESERVED

THIS DOCUMENT IS SUBJECT TO CHANGE WITHOUT NOTICE. THE PRODUCTS DESCRIBED HEREIN AND THIS DOCUMENT ARE SUBJECT TO SPECIFIC DISCLAIMERS, SET FORTH AT www.vishay.com/doc?91000