Optocoupler, Phototriac Output, Zero Crossing, Very Low Input Current

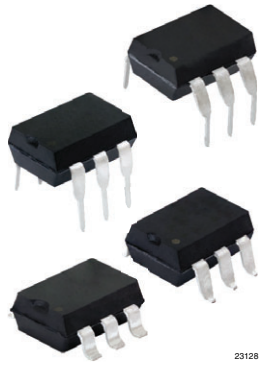

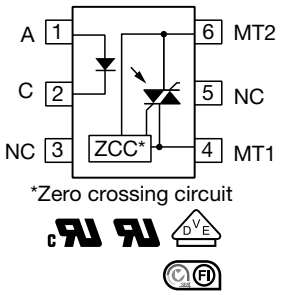

FEATURES

- Low trigger current I_{FT} = 0.7 mA (typ.)
- I_{TRMS} = 300 mA
- High static dV/dt ≥ 10 000 V/µs
- Load voltage up to 800 V
- Zero voltage crossing detector
- Material categorization: for definitions of compliance please see www.vishay.com/doc?99912

Pb-free

e3

RoHS COMPLIANT

APPLICATIONS

- Solid-state relay
- Lighting controls
- Temperature controls
- Solenoid / valve controls
- AC motor drives / starters

AGENCY APPROVALS

- UL
- cUL
- DIN EN 60747-5-5 (VDE 0884-5), available with option 1
- FIMKO

LINKS TO ADDITIONAL RESOURCES

3D Models | Design Tools | Related Documents | SPICE Models | Footprints | Schematics

DESCRIPTION

The IL4116, IL4117, and IL4118 product family consists of an optically coupled GaAs IRLED to a photosensitive thyristor system with integrated noise suppression and zero crossing circuit.

The thyristor system enables low trigger currents of 0.7 mA and features a dV/dt ratio of greater than 10 kV/µs and load voltages up to 800 V.

The IL4116, IL4117, and IL4118 product family is a perfect microcontroller friendly solution to isolate low voltage logic from high voltage 120 V_{AC}, 240 V_{AC}, and 380 V_{AC} lines and to control resistive, inductive, or capacitive AC loads like motors, solenoids, high power thyristors or TRIACs, and solid-state relays.

ORDERING INFORMATION

I	L	4	1	1	#	-	X	0	#	#	T
PART NUMBER							PACKAGE OPTION				TAPE AND REEL

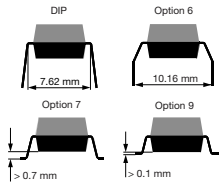

AGENCY CERTIFIED / PACKAGE	PEAK OFF-STATE VOLTAGE V_{DRM} (V)		
UL, cUL, FIMKO	**600**	**700**	**800**
DIP-6	IL4116	IL4117	IL4118
DIP-6, 400 mil, option 6	-	-	IL4118-X006
SMD-6, option 7	IL4116-X007T (1)	IL4117-X007	IL4118-X007T (1)
SMD-6, option 9	IL4116-X009T	-	IL4118-X009T
VDE, UL, cUL, FIMKO	**600**	**700**	**800**
SMD-6, option 7	-	-	IL4118-X017 (1)

Notes

- Additional options may be possible, please contact sales office

(1) Also available in tubes, do not put T on the end

For technical questions, contact: optocoupleranswers@vishay.com

THIS DOCUMENT IS SUBJECT TO CHANGE WITHOUT NOTICE. THE PRODUCTS DESCRIBED HEREIN AND THIS DOCUMENT ARE SUBJECT TO SPECIFIC DISCLAIMERS, SET FORTH AT www.vishay.com/doc?91000

ABSOLUTE MAXIMUM RATINGS (T_{amb} = 25 °C, unless otherwise specified)					
PARAMETER	**TEST CONDITION**	**PART**	**SYMBOL**	**VALUE**	**UNIT**
INPUT					
Reverse voltage			V_R	6	V
Forward current			I_F	60	mA
Surge current			I_{FSM}	2.5	A
Power dissipation			P_{diss}	100	mW
Derate linearly from 25 °C				1.33	mW/°C
Thermal resistance			R_{th}	750	°C/W
OUTPUT					
Peak off-state voltage		IL4116	V_{DRM}	600	V
		IL4117	V_{DRM}	700	V
		IL4118	V_{DRM}	800	V
RMS on-state current			I_{DRM}	300	mA
Single cycle surge				3	A
Power dissipation			P_{diss}	500	mW
Derate linearly from 25 °C				6.6	mW/°C
Thermal resistance			R_{th}	150	°C/W
COUPLER					
Storage temperature			T_{stg}	-55 to +150	°C
Operating temperature			T_{amb}	-55 to +100	°C
Lead soldering temperature	5 s		T_{sld}	260	°C

Note

- Stresses in excess of the absolute maximum ratings can cause permanent damage to the device. Functional operation of the device is not implied at these or any other conditions in excess of those given in the operational sections of this document. Exposure to absolute maximum ratings for extended periods of the time can adversely affect reliability

For technical questions, contact: optocoupleranswers@vishay.com
THIS DOCUMENT IS SUBJECT TO CHANGE WITHOUT NOTICE. THE PRODUCTS DESCRIBED HEREIN AND THIS DOCUMENT ARE SUBJECT TO SPECIFIC DISCLAIMERS, SET FORTH AT www.vishay.com/doc?91000

ELECTRICAL CHARACTERISTICS (T_{amb} = 25 °C, unless otherwise specified)							
PARAMETER	**TEST CONDITION**	**PART**	**SYMBOL**	**MIN.**	**TYP.**	**MAX.**	**UNIT**
INPUT							
Forward voltage	I_F = 20 mA		V_F	-	1.3	1.5	V
Breakdown voltage	I_R = 10 µA		V_{BR}	6	30	-	V
Reverse current	V_R = 6 V		I_R	-	0.1	10	µA
Capacitance	V_F = 0 V, f = 1 MHz		C_O	-	40	-	pF
Thermal resistance, junction to lead			R_{thjl}	-	750	-	°C/W
OUTPUT							
Repetitive peak off-state voltage	I_{DRM} = 100 µA	IL4116	V_{DRM}	600	650	-	V
		IL4117	V_{DRM}	700	750	-	V
		IL4118	V_{DRM}	800	850	-	V
Off-state voltage	$I_{D(RMS)}$ = 70 µA	IL4116	$V_{D(RMS)}$	424	460	-	V
		IL4117	$V_{D(RMS)}$	494	536	-	V
		IL4118	$V_{D(RMS)}$	565	613	-	V
Off-state current	V_D = 600, T_{amb} = 100 °C		$I_{D(RMS)}$	-	10	100	µA
On-state voltage	I_T = 300 mA		V_{TM}	-	1.7	3	V
On-state current	PF = 1, $V_{T(RMS)}$ = 1.7 V		I_{TM}	-	-	300	mA
Surge (non-repetitive, on-state current)	f = 50 Hz		I_{TSM}	-	-	3	A
Holding current	V_T = 3 V		I_H	-	65	200	µA
Latching current	V_T = 2.2 V		I_L	-	-	500	µA
LED trigger current	V_{AK} = 5 V		I_{FT}	-	0.7	1.3	mA
Zero cross inhibit voltage	I_F = rated I_{FT}		V_{IH}	-	15	25	V
Critical rate of rise off-state voltage	V_{RM}, V_{DM} = 400 V_{AC}		dV/dt_{cr}	10 000	-	-	V/µs
	V_{RM}, V_{DM} = 400 V_{AC}, T_{amb} = 80 °C		dV/dt_{cr}	-	2000	-	V/µs
Critical rate of rise of voltage at current commutation	V_D = 230 V_{RMS}, I_D = 300 mA_{RMS}, T_J = 25 °C		dV/dt_{crq}	-	8	-	V/µs
	V_D = 230 V_{RMS}, I_D = 300 mA_{RMS}, T_J = 85 °C		dV/dt_{crq}	-	7	-	V/µs
Critical rate of rise of on-state current commutation	V_D = 230 V_{RMS}, I_D = 300 mA_{RMS}, T_J = 25 °C		dV/dt_{crq}	-	12	-	A/ms
Thermal resistance, junction to lead			R_{thjl}	-	150	-	°C/W
COUPLER							
Critical state of rise of coupler input-output voltage	I_T = 0 A, V_{RM} = V_{DM} = 424 V_{AC}		$dV_{(IO)}/dt$	10 000	-	-	V/µs
Capacitance (input to output)	f = 1 MHz, V_{IO} = 0 V		C_{IO}	-	0.8	-	pF
Common mode coupling capacitance			C_{CM}	-	0.01	-	pF

Note

- Minimum and maximum values are testing requirements. Typical values are characteristics of the device and are the result of engineering evaluation. Typical values are for information only and are not part of the testing requirements

SWITCHING CHARACTERISTICS						
PARAMETER	**TEST CONDITION**	**SYMBOL**	**MIN.**	**TYP.**	**MAX.**	**UNIT**
Turn-on time	V_{RM} = V_{DM} = 424 V_{AC}	t_{on}	-	35	-	µs
Turn-off time	PF = 1, I_T = 300 mA	t_{off}	-	50	-	µs

For technical questions, contact: optocoupleranswers@vishay.com
THIS DOCUMENT IS SUBJECT TO CHANGE WITHOUT NOTICE. THE PRODUCTS DESCRIBED HEREIN AND THIS DOCUMENT ARE SUBJECT TO SPECIFIC DISCLAIMERS, SET FORTH AT www.vishay.com/doc?91000

SAFETY AND INSULATION RATINGS				
PARAMETER	**TEST CONDITION**	**SYMBOL**	**VALUE**	**UNIT**
Climatic classification	According to IEC 68 part 1		55 / 100 / 21	
Comparative tracking index		CTI	175	
Maximum rated withstanding isolation voltage	t = 1 min	V_{ISO}	4420	V_{RMS}
Maximum transient isolation voltage		V_{IOTM}	8000	V_{peak}
Maximum repetitive peak isolation voltage		V_{IORM}	890	V_{peak}
Isolation resistance	V_{IO} = 500 V, T_{amb} = 25 °C	R_{IO}	$\geq 10^{12}$	Ω
	V_{IO} = 500 V, T_{amb} = 100 °C	R_{IO}	$\geq 10^{11}$	Ω
Output safety power		P_{SO}	500	mW
Input safety current		I_{SI}	250	mA
Safety temperature		T_S	175	°C
Creepage distance	DIP-6; SMD-6, option 7; SMD-6, option 9		≥ 7	mm
	DIP-6, 400 mil, option 6		≥ 8	mm
Clearance distance	DIP-6; SMD-6, option 7; SMD-6, option 9		≥ 7	mm
	DIP-6, 400 mil, option 6		≥ 8	mm
Insulation thickness		DTI	≥ 0.4	mm

Note

- As per IEC 60747-5-5, § 7.4.3.8.2, this optocoupler is suitable for “safe electrical insulation” only within the safety ratings. Compliance with the safety ratings shall be ensured by means of protective circuits

TYPICAL CHARACTERISTICS (T_{amb} = 25 °C, unless otherwise specified)

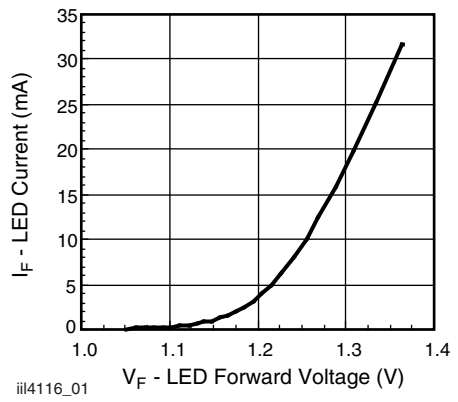

Fig. 1 - LED Forward Current vs. Forward Voltage

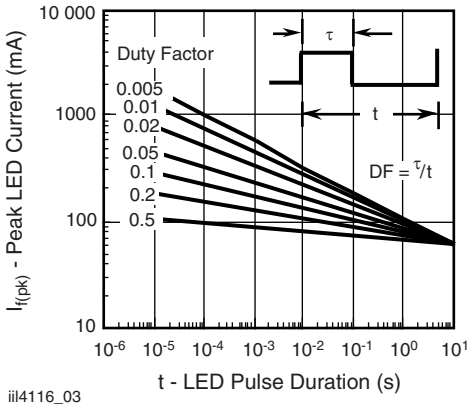

Fig. 3 - Peak LED Current vs. Duty Factor, τ

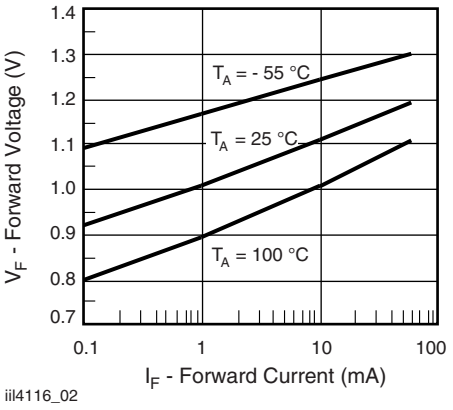

Fig. 2 - Forward Voltage vs. Forward Current

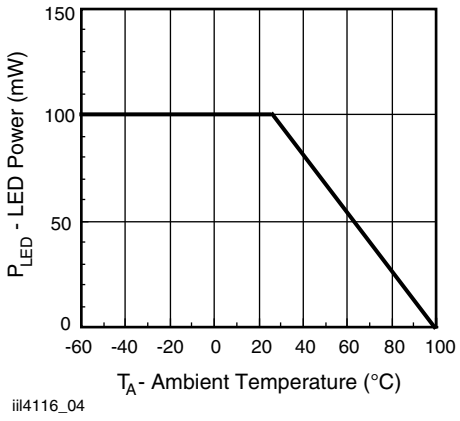

Fig. 4 - Maximum LED Power Dissipation

For technical questions, contact: optocoupleranswers@vishay.com

THIS DOCUMENT IS SUBJECT TO CHANGE WITHOUT NOTICE. THE PRODUCTS DESCRIBED HEREIN AND THIS DOCUMENT ARE SUBJECT TO SPECIFIC DISCLAIMERS, SET FORTH AT www.vishay.com/doc?91000

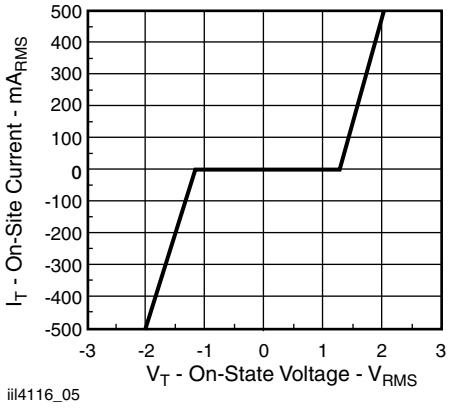

Fig. 5 - On-State Terminal Voltage vs. Terminal Current

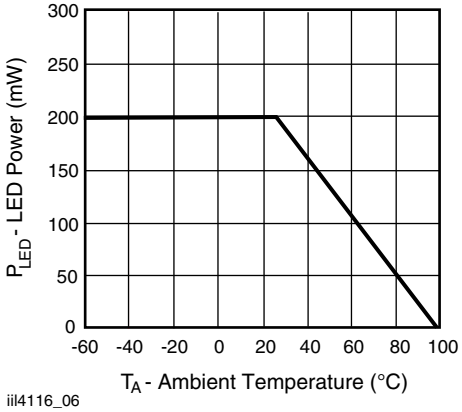

Fig. 6 - Maximum Output Power Dissipation

TRIGGER CURRENT VS. TEMPERATURE AND VOLTAGE

The trigger current of the IL4116, IL4117, IL4118 has a positive temperature gradient and also is dependent on the terminal voltage as shown as the fig. 7.

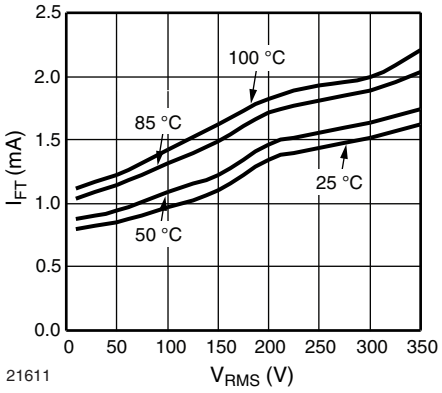

Fig. 7 - Trigger Current vs.
Temperature and Operating Voltage (50 Hz)

For the operating voltage 250 V_{RMS} over the temperature range -40 °C to +85 °C, the I_F should be at least 2.3 x of the I_{FT1} (1.3 mA, max.).

Considering -30 % degradation over time, the trigger current minimum is I_F = 1.3 x 2.3 x 130 % = 4 mA

For technical questions, contact: optocoupleranswers@vishay.com
THIS DOCUMENT IS SUBJECT TO CHANGE WITHOUT NOTICE. THE PRODUCTS DESCRIBED HEREIN AND THIS DOCUMENT ARE SUBJECT TO SPECIFIC DISCLAIMERS, SET FORTH AT www.vishay.com/doc?91000

INDUCTIVE AND RESISTIVE LOADS

For inductive loads, there is phase shift between voltage and current, shown in the Fig. 8.

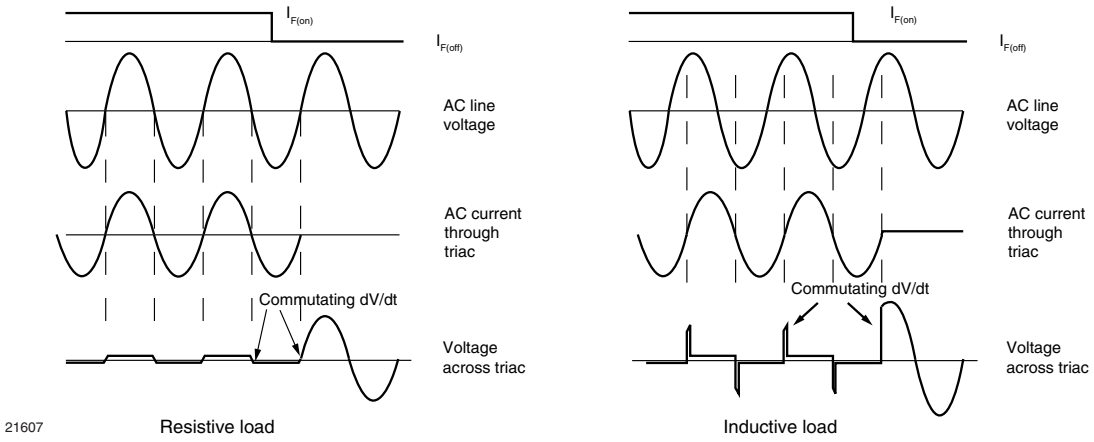

Fig. 8 - Waveforms of Resistive and Inductive Loads

The voltage across the triac will rise rapidly at the time the current through the power handling triac falls below the holding current and the triac ceases to conduct. The rise rate of voltage at the current commutation is called commutating dV/dt. There would be two potential problems for ZC phototriac control if the commutating dV/dt is too high. One is lost control to turn off, another is failed to keep the triac on.

Lost Control to Turn Off

If the commutating dV/dt is too high, more than its critical rate (dV/dt_{crq}), the triac may resume conduction even if the LED drive current I_F is off and control is lost.

In order to achieve control with certain inductive loads of power factors is less than 0.8, the rate of rise in voltage (dV/dt) must be limited by a series RC network placed in parallel with the power handling triac. The RC network is called snubber circuit. Note that the value of the capacitor increases as a function of the load current as shown in fig. 9.

Failed to Keep On

As a zero-crossing phototriac, the commutating dV/dt spikes can inhibit one half of the TRIAC from keeping on If the spike potential exceeds the inhibit voltage of the zero cross detection circuit, even if the LED drive current I_F is on.

This hold-off condition can be eliminated by using a snubber and also by providing a higher level of LED drive current. The higher LED drive provides a larger photocurrent which causes the triac to turn-on before the commutating spike has activated the zero cross detection circuit. Fig. 10 shows the relationship of the LED current for power factors of less than 1.0. The curve shows that if a device requires 1.5 mA for a resistive load, then 1.8 times (2.7 mA) that amount would be required to control an inductive load whose power factor is less than 0.3 without the snubber to dump the spike.

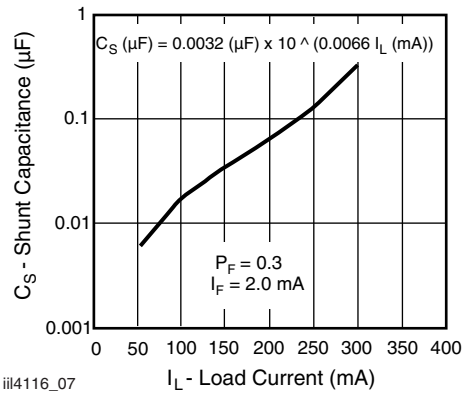

Fig. 9 - Shunt Capacitance vs. Load Current vs. Power Factor

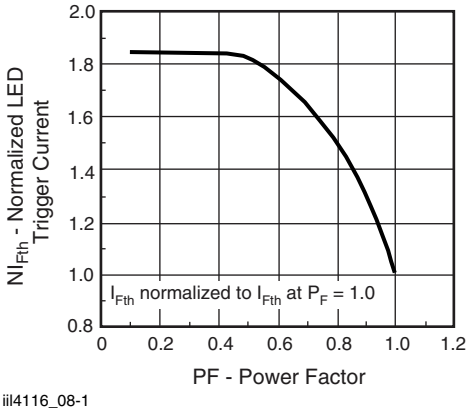

Fig. 10 - Normalized LED Trigger Current

For technical questions, contact: optocoupleranswers@vishay.com
THIS DOCUMENT IS SUBJECT TO CHANGE WITHOUT NOTICE. THE PRODUCTS DESCRIBED HEREIN AND THIS DOCUMENT ARE SUBJECT TO SPECIFIC DISCLAIMERS, SET FORTH AT www.vishay.com/doc?91000

APPLICATIONS

Direct switching operation:

The IL4116, IL4117, IL4118 isolated switch is mainly suited to control synchronous motors, valves, relays and solenoids. Fig. 11 shows a basic driving circuit. For resistive load the snubber circuit R_S C_S can be omitted due to the high static dV/dt characteristic.

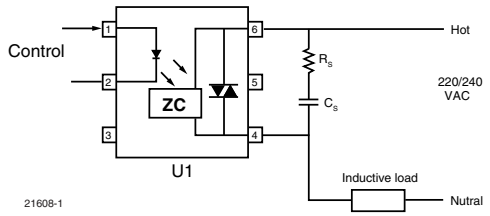

Fig. 11 - Basic Direct Load Driving Circuit

Indirect switching operation:

The IL4116, IL4117, IL4118 switch acts here as an isolated driver and thus enables the driving of power thyristors and power triacs by microprocessors. Fig. 12 shows a basic driving circuit of inductive load. The resister R1 limits the driving current pulse which should not exceed the maximum permissible surge current of the IL4116, IL4117, IL4118. The resister R_G is needed only for very sensitive thyristors or triacs from being triggered by noise or the inhibit current.

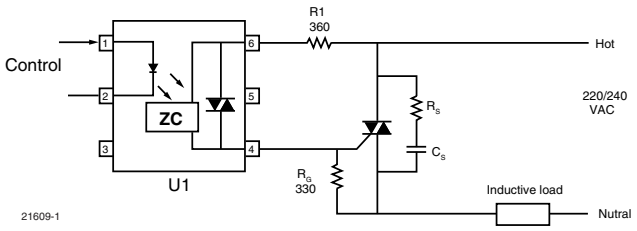

Fig. 12 - Basic Power Triac Driver Circuit

PACKAGE DIMENSIONS (in millimeters)

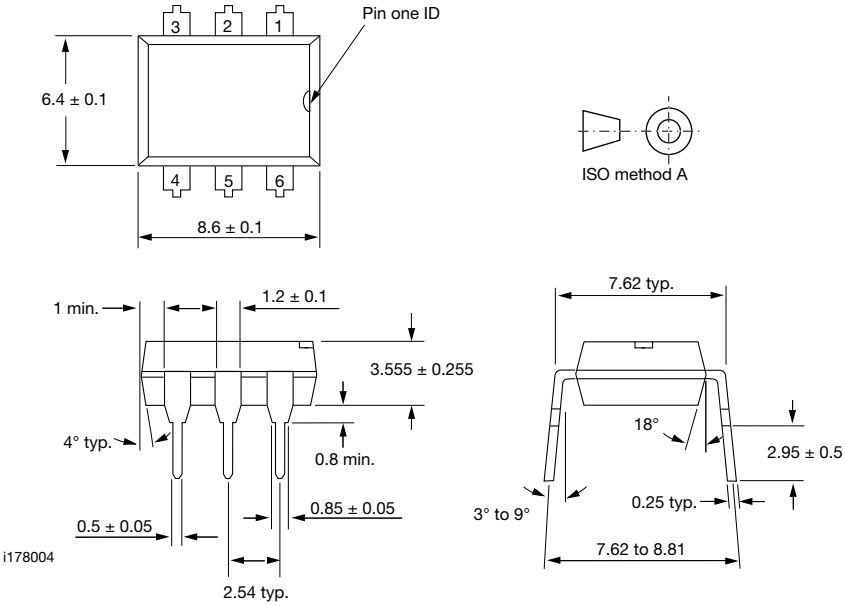

Option 6

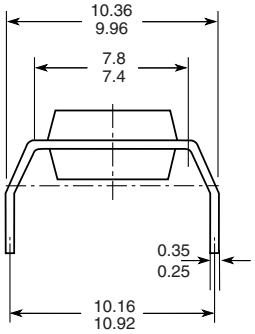

Option 7

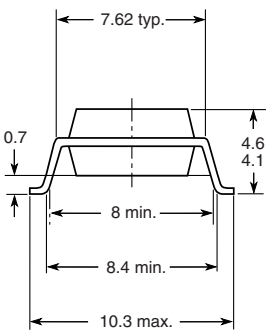

Option 9

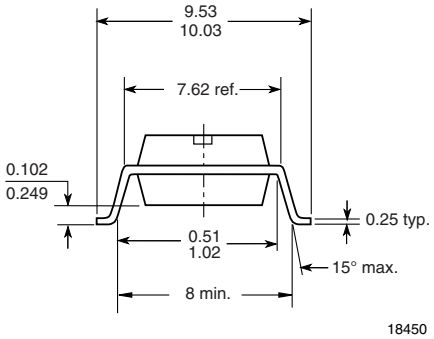

For technical questions, contact: optocoupleranswers@vishay.com

THIS DOCUMENT IS SUBJECT TO CHANGE WITHOUT NOTICE. THE PRODUCTS DESCRIBED HEREIN AND THIS DOCUMENT ARE SUBJECT TO SPECIFIC DISCLAIMERS, SET FORTH AT www.vishay.com/doc?91000

PACKAGE MARKING (example)

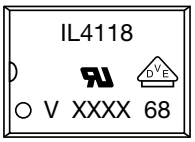

Fig. 13 - Example of IL4118-X017

Notes

- XXXX = LMC (lot marking code)
- VDE logo is only marked on option 1 parts
- Tape and reel suffix (T) is not part of the package marking

PACKING INFORMATION

DEVICES PER TUBE			
TYPE	**UNITS/TUBE**	**TUBES/BOX**	**UNITS/BOX**
DIP-6	50	40	2000

TAPE AND REEL SPECIFICATIONS

Surface-mounted devices are packaged in embossed tape and wound onto 13" molded plastic reels for shipment, to comply with Electronics Industries Association Standard EIA-481, revision A, and International Electrotechnical Commission standard IEC 60286.

Leaders and Trailers

The carrier tape and cover tape are not spliced. Both tapes are one single uninterrupted piece from end to end, as shown in figure 2. Both ends of the tape have empty pockets meeting these requirements.

- Trailer end (inside hub of reel) is 200 mm minimum
- Leader end (outside of reel) is 400 mm minimum and 560 mm maximum
- Unfilled leader and trailer pockets are sealed
- Leaders and trailers are taped to tape and hub, respectively, with masking tape
- All materials are static-dissipative

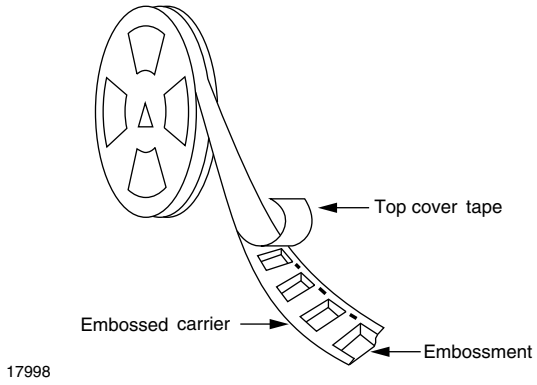

Fig. 14 - Tape and Reel Shipping Medium

For technical questions, contact: optocoupleranswers@vishay.com
THIS DOCUMENT IS SUBJECT TO CHANGE WITHOUT NOTICE. THE PRODUCTS DESCRIBED HEREIN AND THIS DOCUMENT ARE SUBJECT TO SPECIFIC DISCLAIMERS, SET FORTH AT www.vishay.com/doc?91000

TAPE AND REEL PACKAGING FOR SMD-6 OPTOCOUPLERS WITH OPTION 7

Dimensions in millimeters

Selected 6 pin optocouplers with option 7 are available in tape and reel format. To order 6 pin optocoupler with option 7 on tape and reel, add a suffix “T” after the option, i.e., CNY17-3X007T.

The tape is 16 mm and is wound on a 33 cm reel. There are 1000 parts per reel. Taped and reeled 6 pin optocouplers conform to EIA-481-2 and IEC 60286-3.

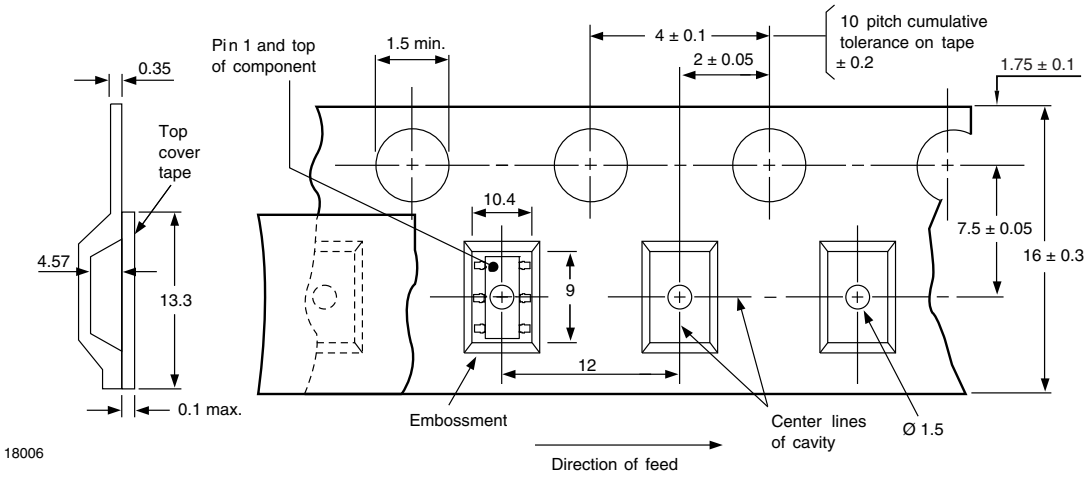

Fig. 15

TAPE AND REEL PACKAGING FOR SMD-6 OPTOCOUPLERS WITH OPTION 9

Dimensions in millimeters

Selected 6 pin optocouplers with option 9 are available in tape and reel format. To order 6 pin optocoupler with option 9 on tape and reel, add a suffix “T” after the option, i.e., CNY17-3X009T.

The tape is 16 mm and is wound on a 33 cm reel. There are 1000 parts per reel. Taped and reeled 6 pin optocouplers conform to EIA-481-2 and IEC 60286-3.

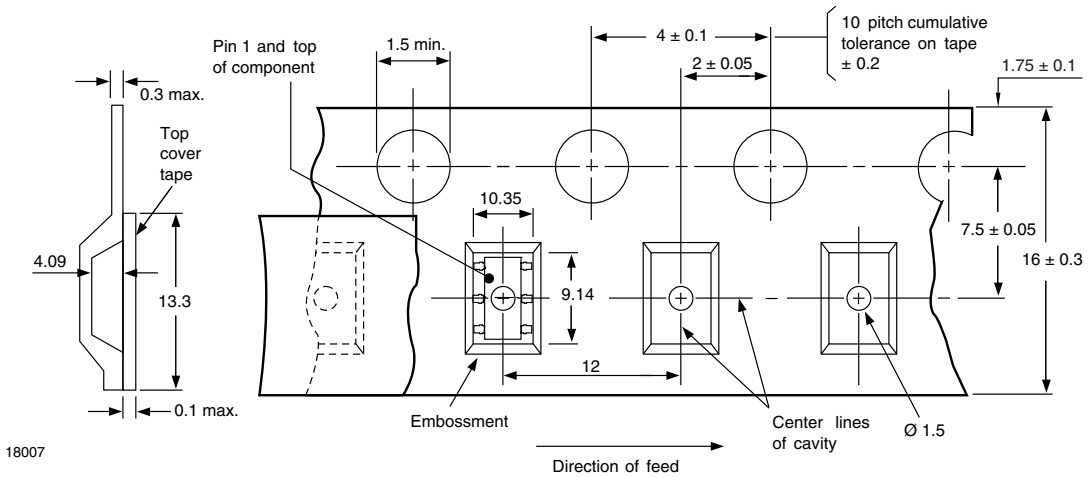

Fig. 16

For technical questions, contact: optocoupleranswers@vishay.com
THIS DOCUMENT IS SUBJECT TO CHANGE WITHOUT NOTICE. THE PRODUCTS DESCRIBED HEREIN AND THIS DOCUMENT ARE SUBJECT TO SPECIFIC DISCLAIMERS, SET FORTH AT www.vishay.com/doc?91000

REEL DIMENSIONS in millimeters

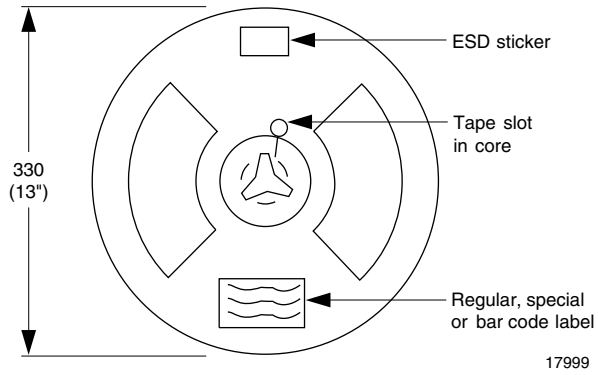

Fig. 16 - Reel Dimensions

SOLDER PROFILES

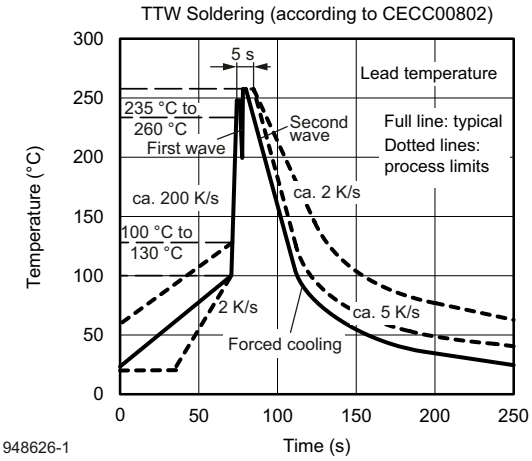

Fig. 17 - Wave Soldering Double Wave Profile According to J-STD-020 for DIP-8 Devices

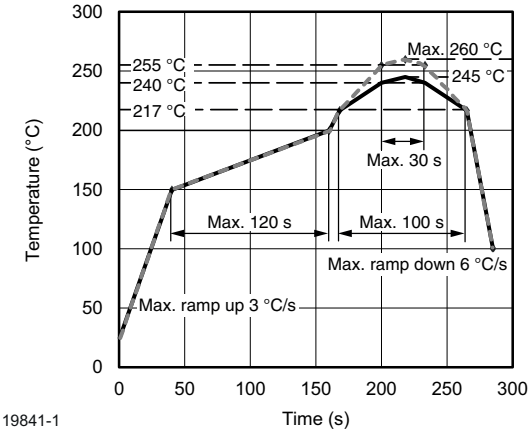

Fig. 18 - Lead (Pb)-free Reflow Solder Profile According to J-STD-020 for SMD-8 Devices

HANDLING AND STORAGE CONDITIONS

ESD level: HBM class 2

Floor life: unlimited

Conditions: T_{amb} < 30 °C, RH < 85 %

Moisture sensitivity level 1, according to J-STD-020

For technical questions, contact: optocoupleranswers@vishay.com
THIS DOCUMENT IS SUBJECT TO CHANGE WITHOUT NOTICE. THE PRODUCTS DESCRIBED HEREIN AND THIS DOCUMENT ARE SUBJECT TO SPECIFIC DISCLAIMERS, SET FORTH AT www.vishay.com/doc?91000

Disclaimer

ALL PRODUCT, PRODUCT SPECIFICATIONS AND DATA ARE SUBJECT TO CHANGE WITHOUT NOTICE TO IMPROVE RELIABILITY, FUNCTION OR DESIGN OR OTHERWISE.

Vishay Intertechnology, Inc., its affiliates, agents, and employees, and all persons acting on its or their behalf (collectively, “Vishay”), disclaim any and all liability for any errors, inaccuracies or incompleteness contained in any datasheet or in any other disclosure relating to any product.

Vishay makes no warranty, representation or guarantee regarding the suitability of the products for any particular purpose or the continuing production of any product. To the maximum extent permitted by applicable law, Vishay disclaims (i) any and all liability arising out of the application or use of any product, (ii) any and all liability, including without limitation special, consequential or incidental damages, and (iii) any and all implied warranties, including warranties of fitness for particular purpose, non-infringement and merchantability.

Statements regarding the suitability of products for certain types of applications are based on Vishay's knowledge of typical requirements that are often placed on Vishay products in generic applications. Such statements are not binding statements about the suitability of products for a particular application. It is the customer's responsibility to validate that a particular product with the properties described in the product specification is suitable for use in a particular application. Parameters provided in datasheets and / or specifications may vary in different applications and performance may vary over time. All operating parameters, including typical parameters, must be validated for each customer application by the customer's technical experts. Product specifications do not expand or otherwise modify Vishay's terms and conditions of purchase, including but not limited to the warranty expressed therein.

Hyperlinks included in this datasheet may direct users to third-party websites. These links are provided as a convenience and for informational purposes only. Inclusion of these hyperlinks does not constitute an endorsement or an approval by Vishay of any of the products, services or opinions of the corporation, organization or individual associated with the third-party website. Vishay disclaims any and all liability and bears no responsibility for the accuracy, legality or content of the third-party website or for that of subsequent links.

Vishay products are not designed for use in life-saving or life-sustaining applications or any application in which the failure of the Vishay product could result in personal injury or death unless specifically qualified in writing by Vishay. Customers using or selling Vishay products not expressly indicated for use in such applications do so at their own risk. Please contact authorized Vishay personnel to obtain written terms and conditions regarding products designed for such applications.

No license, express or implied, by estoppel or otherwise, to any intellectual property rights is granted by this document or by any conduct of Vishay. Product names and markings noted herein may be trademarks of their respective owners.

© 2024 VISHAY INTERTECHNOLOGY, INC. ALL RIGHTS RESERVED

THIS DOCUMENT IS SUBJECT TO CHANGE WITHOUT NOTICE. THE PRODUCTS DESCRIBED HEREIN AND THIS DOCUMENT ARE SUBJECT TO SPECIFIC DISCLAIMERS, SET FORTH AT www.vishay.com/doc?91000