Optocoupler, Phototransistor Output, Dual Channel, SOIC-8 Package

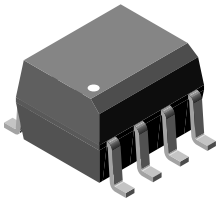

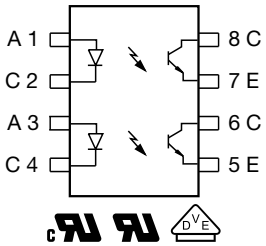

FEATURES

- Two channel coupler
- SOIC-8 surface mountable package
- Standard lead spacing of 0.05"
- Available only on tape and reel option (conforms to EIA standard 481-2)
- Isolation test voltage, 4000 V_{RMS}
- Compatible with dual wave, vapor phase and IR reflow soldering
- Material categorization: for definitions of compliance please see www.vishay.com/doc?99912

Pb-free

e3

RoHS COMPLIANT

AGENCY APPROVALS

- UL
- cUL
- DIN EN 60747-5-5 (VDE 0884-5), available with option 1

DESCRIPTION

The ILD205T, ILD206T, ILD207T, ILD211T, and ILD213T are optically coupled pairs with a GaAs infrared LED and a silicon NPN phototransistor. Signal information, including a DC level, can be transmitted by the device while maintaining a high degree of electrical isolation between input and output. The ILD205T, ILD206T, ILD207T, ILD211T, and ILD213T come in a standard SOIC-8 small outline package for surface mounting which makes it ideally suited for high density applications with limited space. In addition to eliminating through-holes requirements, this package conforms to standards for surface mounted devices.

A specified minimum and maximum CTR allows a narrow tolerance in the electrical design of the adjacent circuits. The high BV_{CEO} of 70 V gives a higher safety margin compared to the industry standard of 30 V.

ORDERING INFORMATION

I	L	D	2	#	#	T

PART NUMBER

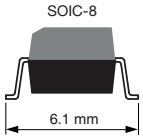

AGENCY CERTIFIED / PACKAGE	CTR (%)				
	10 mA				
UL, cUL, CQC	**40 to 80**	**63 to 125**	**100 to 200**	**≥ 20**	**≥ 100**
SOIC-8	ILD205T	ILD206T	ILD207T	ILD211T	ILD213T

For technical questions, contact: optocoupleranswers@vishay.com

THIS DOCUMENT IS SUBJECT TO CHANGE WITHOUT NOTICE. THE PRODUCTS DESCRIBED HEREIN AND THIS DOCUMENT ARE SUBJECT TO SPECIFIC DISCLAIMERS, SET FORTH AT www.vishay.com/doc?91000

ABSOLUTE MAXIMUM RATINGS (T_{amb} = 25 °C, unless otherwise specified)				
PARAMETER	**TEST CONDITION**	**SYMBOL**	**VALUE**	**UNIT**
INPUT				
Peak reverse voltage		V_R	6	V
Peak pulsed current	1 µs, 300 pps		1	A
Continuous forward current per channel		I_F	30	mA
Power dissipation		P_{diss}	50	mW
OUTPUT				
Collector emitter breakdown voltage		BV_{CEO}	70	V
Emitter collector breakdown voltage		BV_{ECO}	7	V
Power dissipation per channel		P_{diss}	125	mW
COUPLER				
Total package dissipation ambient (2 LEDs and 2 detectors, 2 channels)		P_{tot}	350	mW
Storage temperature		T_{stg}	-55 to +150	°C
Operating temperature		T_{amb}	-55 to +100	°C
Soldering time from 260 °C (1)		T_{sld}	10	s

Notes

- Stresses in excess of the absolute maximum ratings can cause permanent damage to the device. Functional operation of the device is not implied at these or any other conditions in excess of those given in the operational sections of this document. Exposure to absolute maximum ratings for extended periods of the time can adversely affect reliability.

(1) Refer to reflow profile for soldering conditions for surface mounted devices

ELECTRICAL CHARACTERISTICS (T_{amb} = 25 °C, unless otherwise specified)						
PARAMETER	**TEST CONDITION**	**SYMBOL**	**MIN.**	**TYP.**	**MAX.**	**UNIT**
INPUT						
Forward voltage	I_F = 10 mA	V_F	-	1.2	1.55	V
Reverse current	V_R = 6 V	I_R	-	0.1	100	µA
Capacitance	V_R = 0 V	C_O	-	25	-	pF
OUTPUT						
Collector emitter breakdown voltage	I_C = 10 µA	BV_{CEO}	70	-	-	V
Emitter collector breakdown voltage	I_E = 10 µA	BV_{ECO}	7	-	-	V
Collector emitter leakage current	V_{CE} = 10 V, I_F = 0 A	I_{CEO}	-	5	50	nA
Collector emitter capacitance	V_{CE} = 0 V	C_{CE}	-	10	-	pF
COUPLER						
Collector emitter saturation voltage	I_F = 10 mA, I_C = 2.5 mA	V_{CEsat}	-	-	0.4	V
Capacitance (input to output)		C_{IO}	-	0.5	-	pF

Note

- Minimum and maximum values were tested requierements. Typical values are characteristics of the device and are the result of engineering evaluations. Typical values are for information only and are not part of the testing requirements.

CURRENT TRANSFER RATIO (T_{amb} = 25 °C, unless otherwise specified)							
PARAMETER	**TEST CONDITION**	**PART**	**SYMBOL**	**MIN.**	**TYP.**	**MAX.**	**UNIT**
I_C/I_F	V_{CE} = 5 V, I_F = 10 mA	ILD205T	CTR_{DC}	40	-	80	%
		ILD206T	CTR_{DC}	63	-	125	%
		ILD207T	CTR_{DC}	100	-	200	%
		ILD211T	CTR_{DC}	20	-	-	%
		ILD213T	CTR_{DC}	100	-	-	%
	V_{CE} = 5 V, I_F = 1 mA	ILD205T	CTR_{DC}	13	30	-	%
		ILD206T	CTR_{DC}	22	45	-	%
		ILD207T	CTR_{DC}	34	70	-	%

For technical questions, contact: optocoupleranswers@vishay.com
THIS DOCUMENT IS SUBJECT TO CHANGE WITHOUT NOTICE. THE PRODUCTS DESCRIBED HEREIN AND THIS DOCUMENT ARE SUBJECT TO SPECIFIC DISCLAIMERS, SET FORTH AT www.vishay.com/doc?91000

SWITCHING CHARACTERISTICS (T_{amb} = 25 °C, unless otherwise specified)						
PARAMETER	**TEST CONDITION**	**SYMBOL**	**MIN.**	**TYP.**	**MAX.**	**UNIT**
Delay time	V_S = 5 V, I_C = 2 mA, R_L = 100 Ω, (see Fig. 1)	t_d	-	3	-	µs
Rise time	V_S = 5 V, I_C = 2 mA, R_L = 100 Ω, (see Fig. 1)	t_r	-	3	-	µs
Fall time	V_S = 5 V, I_C = 2 mA, R_L = 100 Ω, (see Fig. 1)	t_f	-	4.7	-	µs
Storage time	V_S = 5 V, I_C = 2 mA, R_L = 100 Ω, (see Fig. 1)	t_s	-	0.3	-	µs
Turn-on time	V_S = 5 V, I_C = 2 mA, R_L = 100 Ω, (see Fig. 1)	t_{on}	-	6	-	µs
Turn-off time	V_S = 5 V, I_C = 2 mA, R_L = 100 Ω, (see Fig. 1)	t_{off}	-	5	-	µs
Turn-on time	V_S = 5 V, I_F = 10 mA, R_L = 1 kΩ, (see Fig. 2)	t_{on}	-	3	-	µs
Turn-off time	V_S = 5 V, I_F = 10 mA, R_L = 1 kΩ, (see Fig. 2)	t_{off}	-	10	-	µs

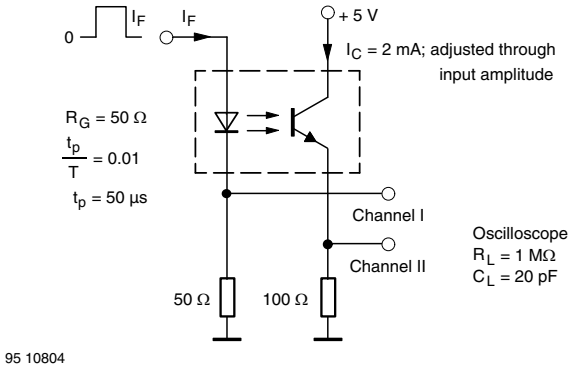

Fig. 1 - Test Circuit, Non-Saturated Operation

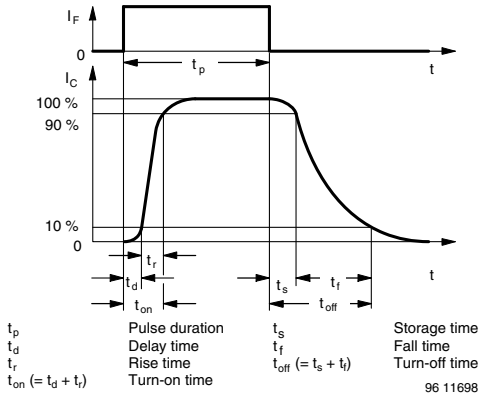

Fig. 3 - Switching Times

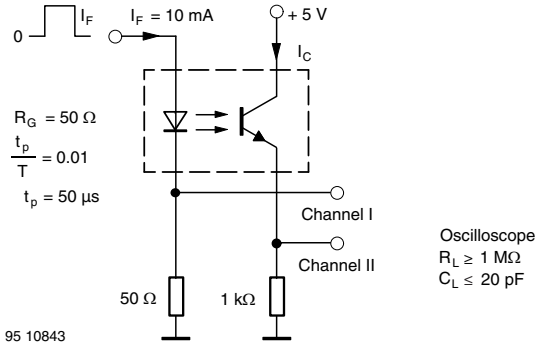

Fig. 2 - Test Circuit, Saturated Operation

For technical questions, contact: optocoupleranswers@vishay.com
THIS DOCUMENT IS SUBJECT TO CHANGE WITHOUT NOTICE. THE PRODUCTS DESCRIBED HEREIN AND THIS DOCUMENT ARE SUBJECT TO SPECIFIC DISCLAIMERS, SET FORTH AT www.vishay.com/doc?91000

SAFETY AND INSULATION RATINGS				
PARAMETER	**TEST CONDITION**	**SYMBOL**	**VALUE**	**UNIT**
Climatic classification	According to IEC 68 part 1		55 / 100 / 21	
Comparative tracking index		CTI	175	
Tested withstanding isolation voltage	According to UL1577, t = 1 s	V_{ISO}	4000	V_{RMS}
Maximum transient isolation voltage	According to DIN EN 60747-5-5	V_{IOTM}	6000	V_{peak}
Maximum repetitive peak isolation voltage	According to DIN EN 60747-5-5	V_{IORM}	560	V_{peak}
Isolation resistance	T_{amb} = 25 °C, V_{IO} = 500 V	R_{IO}	$\geq 10^{12}$	Ω
	T_{amb} = 100 °C, V_{IO} = 500 V	R_{IO}	$\geq 10^{11}$	Ω
Output safety power		P_{SO}	350	mW
Input safety current		I_{SI}	150	mA
Input safety temperature		T_S	165	°C
Creepage distance	DIP-6, option 6		4	mm
Clearance distance	DIP-6, option 6		4	mm
Insulation thickness			0.2	mm

Note

- As per IEC 60747-5-5, § 7.4.3.8.2, this optocoupler is suitable for “safe electrical insulation” only within the safety ratings. Compliance with the safety ratings shall be ensured by means of protective circuits.

TYPICAL CHARACTERISTICS (T_{amb} = 25 °C, unless otherwise specified)

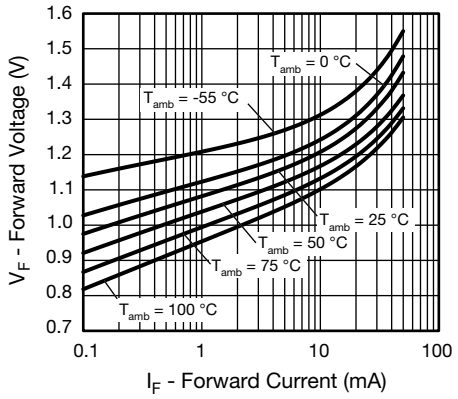

Fig. 4 - Forward Voltage vs. Forward Current

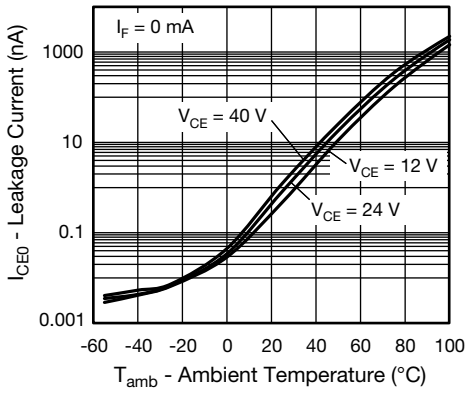

Fig. 6 - Leakage Current vs. Ambient Temperature

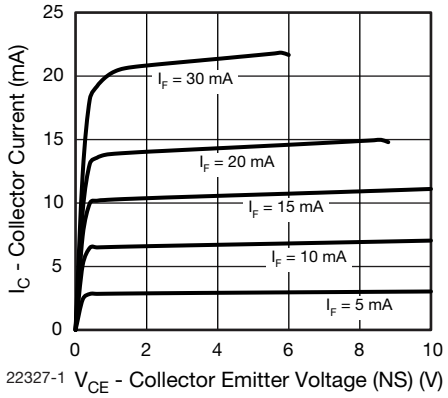

Fig. 5 - Collector Current vs. Collector Emitter Voltage (non-saturated)

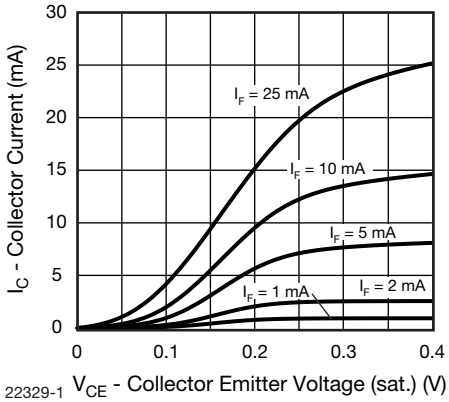

Fig. 7 - Collector Current vs. Collector Emitter Voltage (saturated)

For technical questions, contact: optocoupleranswers@vishay.com
THIS DOCUMENT IS SUBJECT TO CHANGE WITHOUT NOTICE. THE PRODUCTS DESCRIBED HEREIN AND THIS DOCUMENT ARE SUBJECT TO SPECIFIC DISCLAIMERS, SET FORTH AT www.vishay.com/doc?91000

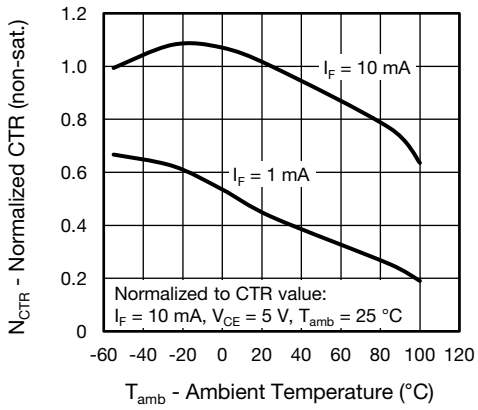

Fig. 8 - Normalized CTR (saturated) vs. Ambient Temperature

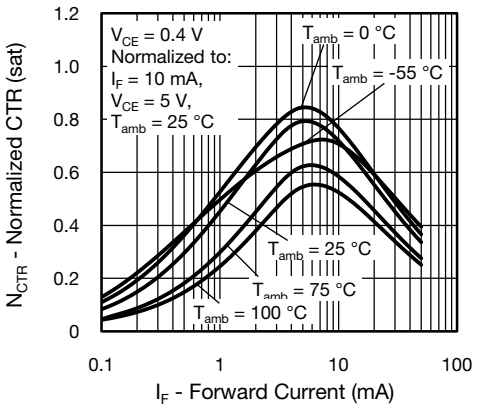

Fig. 11 - Normalized CTR (saturated) vs. Forward Current

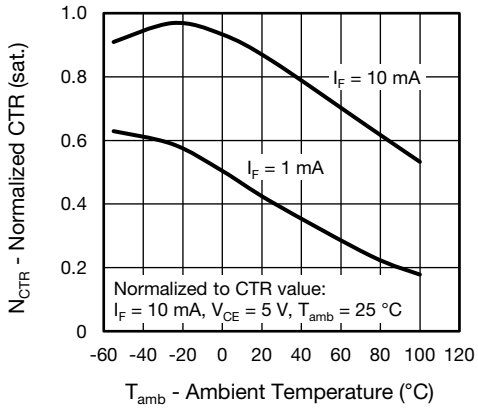

Fig. 9 - Normalized CTR (non-saturated) vs. Ambient Temperature

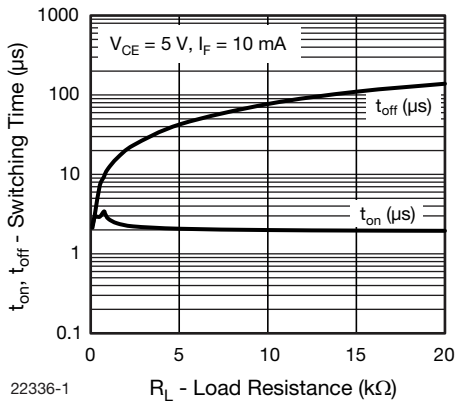

Fig. 12 - Switching Time vs. Load Resistance

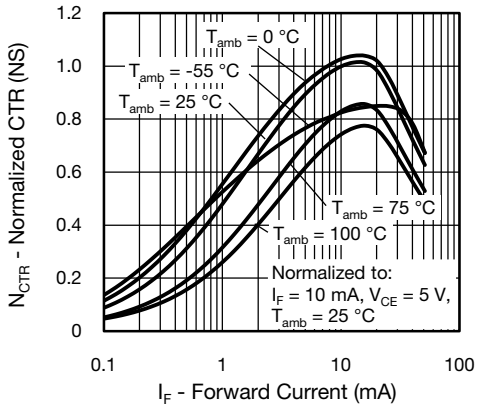

Fig. 10 - Normalized CTR (non-saturated) vs. Forward Current

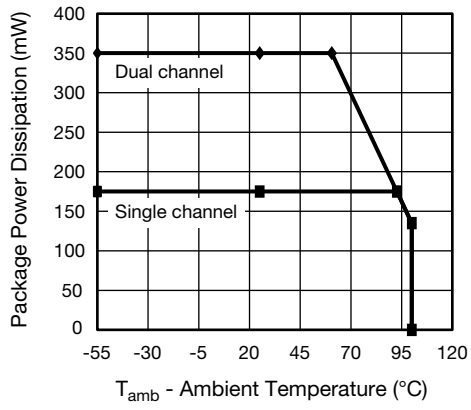

Fig. 13 - Power Dissipation vs. Ambient Temperature

For technical questions, contact: optocoupleranswers@vishay.com
THIS DOCUMENT IS SUBJECT TO CHANGE WITHOUT NOTICE. THE PRODUCTS DESCRIBED HEREIN AND THIS DOCUMENT ARE SUBJECT TO SPECIFIC DISCLAIMERS, SET FORTH AT www.vishay.com/doc?91000

PACKAGE DIMENSIONS (in millimeters)

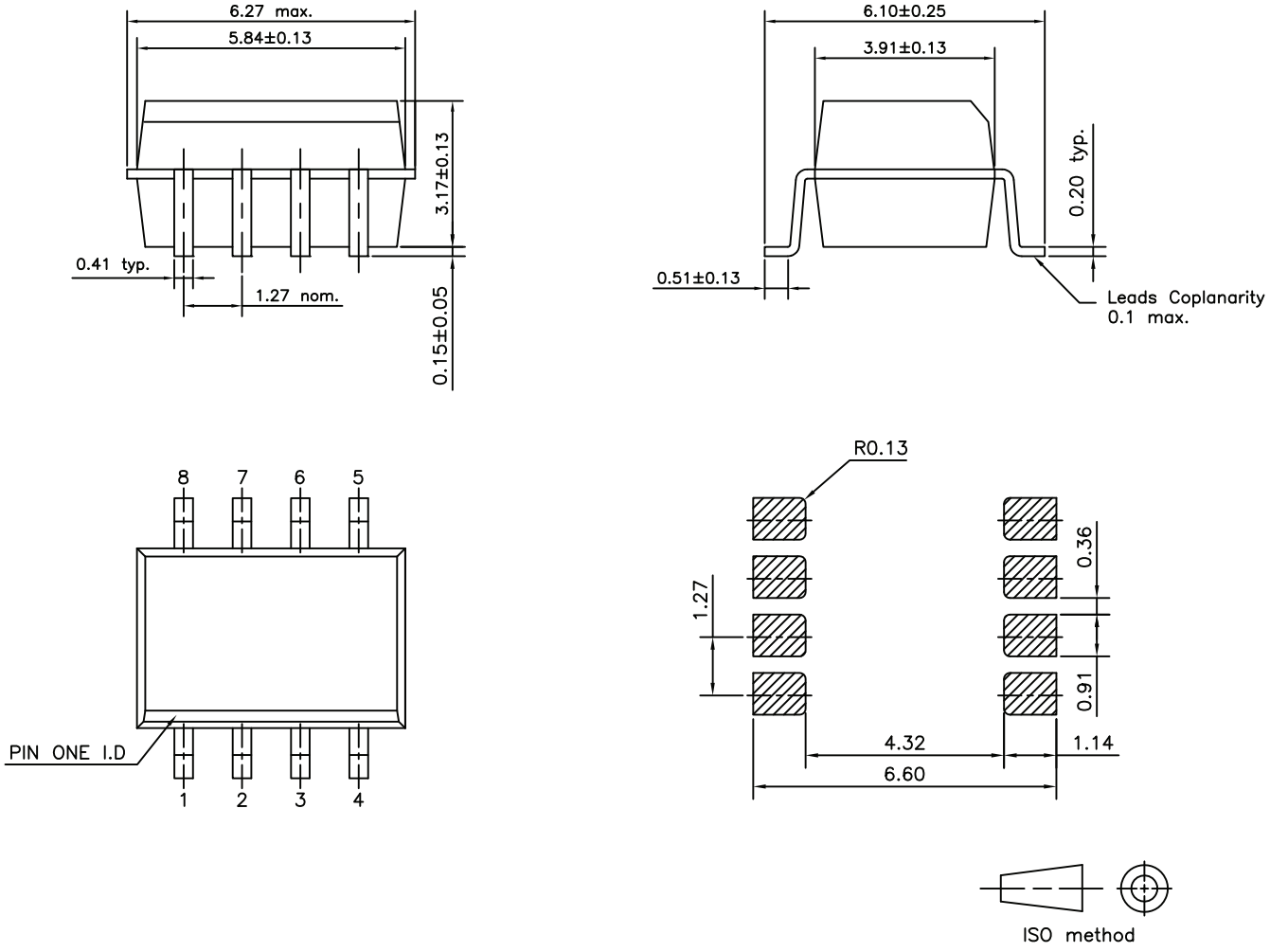

PACKAGE MARKING (example)

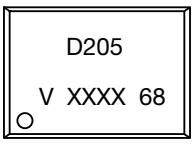

Notes

- XXXX = LMC (lot marking code)
- Tape and reel suffix (T) is not part of the package marking

For technical questions, contact: optocoupleranswers@vishay.com
THIS DOCUMENT IS SUBJECT TO CHANGE WITHOUT NOTICE. THE PRODUCTS DESCRIBED HEREIN AND THIS DOCUMENT ARE SUBJECT TO SPECIFIC DISCLAIMERS, SET FORTH AT www.vishay.com/doc?91000

TAPE AND REEL PACKAGING FOR DUAL CHANNELS [1] (in millimeters)

Selected dual SOIC8 optocouplers are available in tape and reel format. To order surface mount ILD2XX optocoupler on tape and reel, add a suffix “T” after the part number, i.e., ILD207T.

The tape is 16 mm and is wound on a 33 cm reel. There are 2000 parts per reel. Taped and reeled dual SOIC8 optocouplers conform to EIA-481-2 and IEC 60286-3.

Note

(1) Select dual channel devices are available in the shorter SOIC-8 package and will be taped according to the single channel taping specification

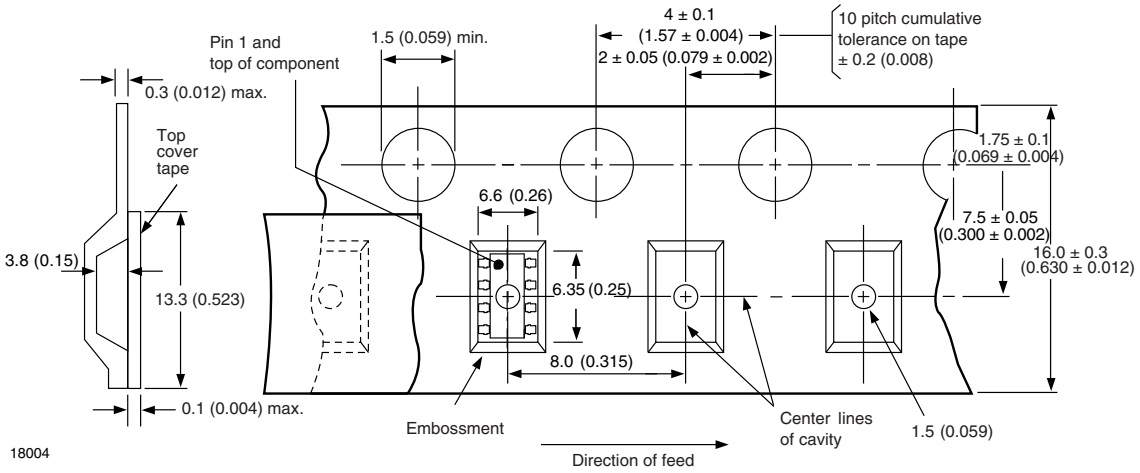

Fig. 14

SOLDER PROFILE

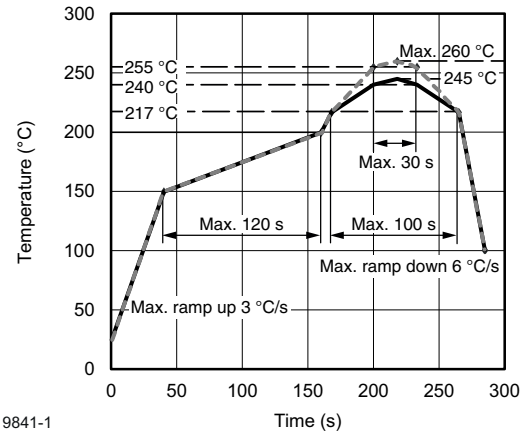

Fig. 15 - Lead (Pb)-free Reflow Solder Profile according to J-STD-020

HANDLING AND STORAGE CONDITIONS

ESD level: HBM class 2

Floor life: unlimited

Conditions: T_{amb} < 30 °C, RH < 85 %

Moisture sensitivity level 1, according to J-STD-020

For technical questions, contact: optocoupleranswers@vishay.com
THIS DOCUMENT IS SUBJECT TO CHANGE WITHOUT NOTICE. THE PRODUCTS DESCRIBED HEREIN AND THIS DOCUMENT ARE SUBJECT TO SPECIFIC DISCLAIMERS, SET FORTH AT www.vishay.com/doc?91000

Disclaimer

ALL PRODUCT, PRODUCT SPECIFICATIONS AND DATA ARE SUBJECT TO CHANGE WITHOUT NOTICE TO IMPROVE RELIABILITY, FUNCTION OR DESIGN OR OTHERWISE.

Vishay Intertechnology, Inc., its affiliates, agents, and employees, and all persons acting on its or their behalf (collectively, “Vishay”), disclaim any and all liability for any errors, inaccuracies or incompleteness contained in any datasheet or in any other disclosure relating to any product.

Vishay makes no warranty, representation or guarantee regarding the suitability of the products for any particular purpose or the continuing production of any product. To the maximum extent permitted by applicable law, Vishay disclaims (i) any and all liability arising out of the application or use of any product, (ii) any and all liability, including without limitation special, consequential or incidental damages, and (iii) any and all implied warranties, including warranties of fitness for particular purpose, non-infringement and merchantability.

Statements regarding the suitability of products for certain types of applications are based on Vishay's knowledge of typical requirements that are often placed on Vishay products in generic applications. Such statements are not binding statements about the suitability of products for a particular application. It is the customer's responsibility to validate that a particular product with the properties described in the product specification is suitable for use in a particular application. Parameters provided in datasheets and / or specifications may vary in different applications and performance may vary over time. All operating parameters, including typical parameters, must be validated for each customer application by the customer's technical experts. Product specifications do not expand or otherwise modify Vishay's terms and conditions of purchase, including but not limited to the warranty expressed therein.

Hyperlinks included in this datasheet may direct users to third-party websites. These links are provided as a convenience and for informational purposes only. Inclusion of these hyperlinks does not constitute an endorsement or an approval by Vishay of any of the products, services or opinions of the corporation, organization or individual associated with the third-party website. Vishay disclaims any and all liability and bears no responsibility for the accuracy, legality or content of the third-party website or for that of subsequent links.

Vishay products are not designed for use in life-saving or life-sustaining applications or any application in which the failure of the Vishay product could result in personal injury or death unless specifically qualified in writing by Vishay. Customers using or selling Vishay products not expressly indicated for use in such applications do so at their own risk. Please contact authorized Vishay personnel to obtain written terms and conditions regarding products designed for such applications.

No license, express or implied, by estoppel or otherwise, to any intellectual property rights is granted by this document or by any conduct of Vishay. Product names and markings noted herein may be trademarks of their respective owners.

© 2024 VISHAY INTERTECHNOLOGY, INC. ALL RIGHTS RESERVED

THIS DOCUMENT IS SUBJECT TO CHANGE WITHOUT NOTICE. THE PRODUCTS DESCRIBED HEREIN AND THIS DOCUMENT ARE SUBJECT TO SPECIFIC DISCLAIMERS, SET FORTH AT www.vishay.com/doc?91000