Optocoupler, Photodarlington Output, Dual Channel, SOIC-8 Package

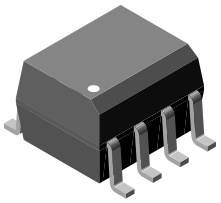

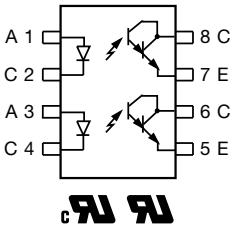

FEATURES

- Two channel optocoupler
- High current transfer ratio at I_F = 1.0 mA, 500 % minimum
- Isolation test voltage, 4000 V_{RMS}
- Electrical specifications similar to standard 6-pin coupler
- Compatible with dual wave, vapor phase and IR reflow soldering
- SOIC-8 surface mountable package
- Standard lead spacing, 0.05"
- Available only on tape and reel (conforms to EIA standard 481-2)
- Material categorization: for definitions of compliance please see www.vishay.com/doc?99912

Pb-free

e3

RoHS COMPLIANT

LINKS TO ADDITIONAL RESOURCES

Related Documents | Design Tools | 3D Models | SPICE Models

DESCRIPTION

The ILD233T is a high current transfer ratio (CTR) optocoupler. It has a gallium arsenide infrared LED emitter and silicon NPN photodarlington transistor detector.

This device has CTRs tested at an LED current of 1.0 mA. This low drive current permits easy interfacing from CMOS to LSTTL or TTL.

The ILD223T is constructed in a standard SOIC-8 foot print which makes it ideally suited for high density applications. In addition to eliminating through hole requirements, this package conforms to standards for surface mounted devices.

AGENCY APPROVALS

- UL
- cUL

ORDERING INFORMATION

I	L	D	2	2	3	T	-	X	0	#	#

PART NUMBER — PACKAGE OPTION

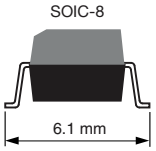

AGENCY CERTIFIED / PACKAGE	CTR (%)
	1 mA
UL, cUL	≥ 500
SOIC-8	ILD223T

For technical questions, contact: optocoupler.answers@vishay.com

THIS DOCUMENT IS SUBJECT TO CHANGE WITHOUT NOTICE. THE PRODUCTS DESCRIBED HEREIN AND THIS DOCUMENT ARE SUBJECT TO SPECIFIC DISCLAIMERS, SET FORTH AT www.vishay.com/doc?91000

ABSOLUTE MAXIMUM RATINGS (T_{amb} = 25 °C, unless otherwise specified)				
PARAMETER	**TEST CONDITION**	**SYMBOL**	**VALUE**	**UNIT**
INPUT				
Peak reverse voltage		V_R	6.0	V
Forward current		I_F	60	mA
Peak pulsed current	1.0 µs, 300 pps		3.0	A
Continuous forward current per channel			30	mA
Power dissipation		P_{diss}	45	mW
Derate linearly from 25 °C			0.4	mW/°C
OUTPUT				
Collector emitter breakdown voltage		BV_{CEO}	30	V
Emitter collector breakdown voltage		BV_{ECO}	5.0	V
Power dissipation per channel		P_{diss}	75	mW
Derate linearly from 25 °C			3.1	mW/°C
COUPLER				
Isolation test voltage	t = 1.0 s	V_{ISO}	4000	V_{RMS}
Total package dissipation (2 LEDs and 2 detectors, 2 channels)		P_{tot}	250	mW
Derate linearly from 25 °C			2.0	mW/°C
Storage temperature		T_{stg}	-55 to +150	°C
Operating temperature		T_{amb}	-55 to +100	°C
Soldering temperature (1)		T_{sld}	260	°C

Notes

- Stresses in excess of the absolute maximum ratings can cause permanent damage to the device. Functional operation of the device is not implied at these or any other conditions in excess of those given in the operational sections of this document. Exposure to absolute maximum ratings for extended periods of the time can adversely affect reliability.

(1) Refer to reflow profile for soldering conditions for surface mounted devices (SOP/SOIC)

ELECTRICAL CHARACTERISTICS (T_{amb} = 25 °C, unless otherwise specified)							
PARAMETER	**TEST CONDITION**	**PART**	**SYMBOL**	**MIN.**	**TYP.**	**MAX.**	**UNIT**
INPUT							
Forward voltage	I_F = 10 mA		V_F	-	-	1.3	V
Reverse current	V_R = 6.0 V		I_R	-	0.1	100	µA
Capacitance	V_F = 0 V, f = 1.0 MHz		C_O	-	25	-	pF
OUTPUT							
Collector emitter breakdown voltage	I_C = 10 µA		BV_{CEO}	30	-	-	V
Emitter collector breakdown voltage	I_C = 10 µA		BV_{ECO}	5.0	-	-	V
Collector emitter leakage current	V_{CE} = 50 V, I_F = 0 A		I_{CEO}	-	-	50	nA
Collector emitter capacitance	V_{CE} = 5.0 V		C_{CE}	-	3.4	-	pF
COUPLER							
Capacitance (input to output)		ILD223T	C_{IO}	0.5	-	-	pF
Saturation voltage, collector emitter	I_F = 1.0 mA, I_{CE} = 0.5 mA	ILD223T	V_{CEsat}	-	-	1.0	V
Resistance, input to output		ILD223T	C_{IO}	100	-	-	GΩ

Note

- Minimum and maximum values are testing requirements. Typical values are characteristics of the device and are the result of engineering evaluation. Typical values are for information only and are not part of the testing requirements.

CURRENT TRANSFER RATIO						
PARAMETER	**TEST CONDITION**	**SYMBOL**	**MIN.**	**TYP.**	**MAX.**	**UNIT**
I_C/I_F	I_F = 1.0 mA, V_{CE} = 5.0 V	CTR_{DC}	500	-	-	%

For technical questions, contact: optocoupler.answers@vishay.com
THIS DOCUMENT IS SUBJECT TO CHANGE WITHOUT NOTICE. THE PRODUCTS DESCRIBED HEREIN AND THIS DOCUMENT ARE SUBJECT TO SPECIFIC DISCLAIMERS, SET FORTH AT www.vishay.com/doc?91000

SWITCHING CHARACTERISTICS							
PARAMETER	TEST CONDITION	PART	SYMBOL	MIN.	TYP.	MAX.	UNIT
Turn-on time	V_{CC} = 10 V, R_L = 100 Ω, I_F = 5.0 mA	ILD223T	t_{on}	15	-	-	µs
Turn-off time	V_{CC} = 10 V, R_L = 100 Ω, I_F = 5.0 mA	ILD223T	t_{off}	30	-	-	µs

SAFETY AND INSULATION RATINGS						
PARAMETER	TEST CONDITION	SYMBOL	MIN.	TYP.	MAX.	UNIT
Climatic classification	According to IEC 68 part 1		-	55 / 100 / 21	-	
Comparative tracking index		CTI	175	-	399	
V_{IOTM}			6000	-	-	V
V_{IORM}			560	-	-	V
PSO			-	-	350	mW
I_{SI}			-	-	150	mA
T_{SI}			-	-	165	°C
Creepage distance			4	-	-	mm
Clearance distance			4	-	-	mm
Insulation thickness			0.2	-	-	mm

Note

- As per IEC 60747-5-5, §7.4.3.8.2, this optocoupler is suitable for “safe electrical insulation” only within the safety ratings. Compliance with the safety ratings shall be ensured by means of protective circuits.

TYPICAL CHARACTERISTICS (T_{amb} = 25 °C, unless otherwise specified)

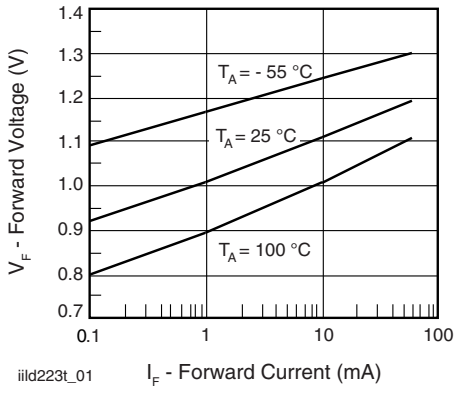

Fig. 1 - Forward Voltage vs. Forward Current

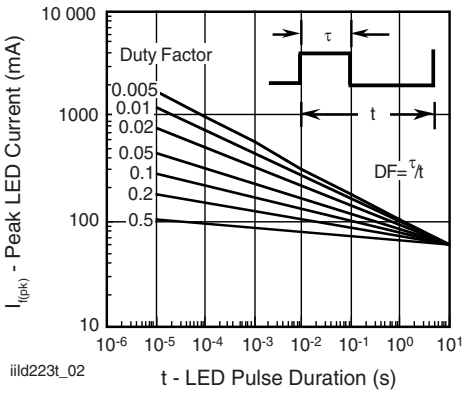

Fig. 2 - Peak LED Current vs. Duty Factor, t

For technical questions, contact: optocoupler.answers@vishay.com

THIS DOCUMENT IS SUBJECT TO CHANGE WITHOUT NOTICE. THE PRODUCTS DESCRIBED HEREIN AND THIS DOCUMENT ARE SUBJECT TO SPECIFIC DISCLAIMERS, SET FORTH AT www.vishay.com/doc?91000

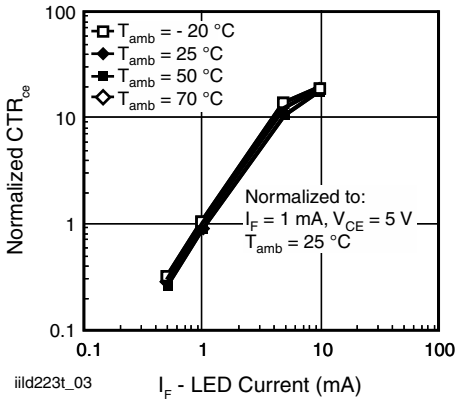

Fig. 3 - Normalized CTR_{CE} vs. LED Current

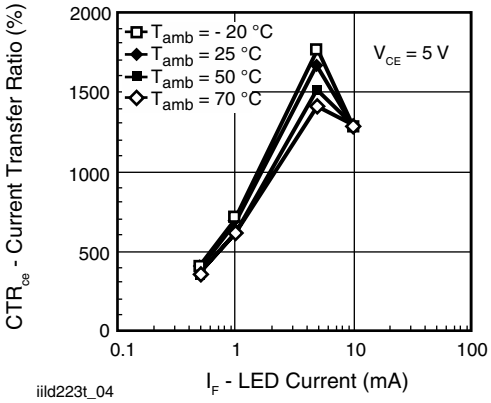

Fig. 4 - CTR vs. LED Current

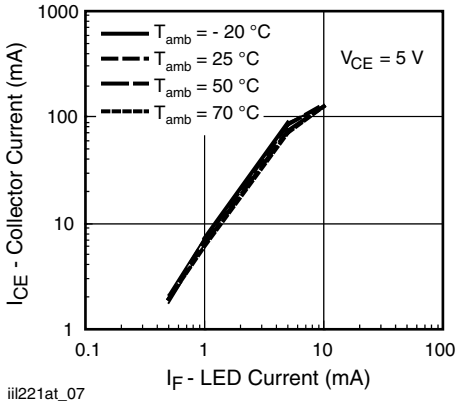

Fig. 5 - Collector Current vs. LED Current

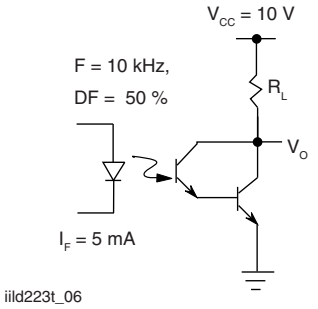

Fig. 6 - Switching Schematic

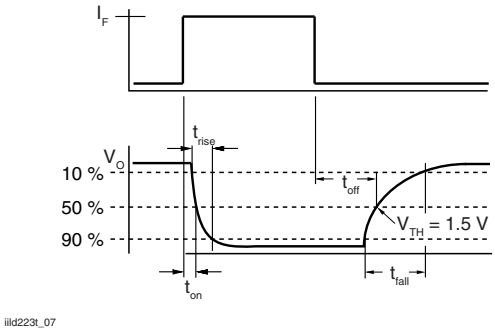

Fig. 7 - Switching Timing

For technical questions, contact: optocoupler.answers@vishay.com
THIS DOCUMENT IS SUBJECT TO CHANGE WITHOUT NOTICE. THE PRODUCTS DESCRIBED HEREIN AND THIS DOCUMENT ARE SUBJECT TO SPECIFIC DISCLAIMERS, SET FORTH AT www.vishay.com/doc?91000

PACKAGE DIMENSIONS in inches (millimeters)

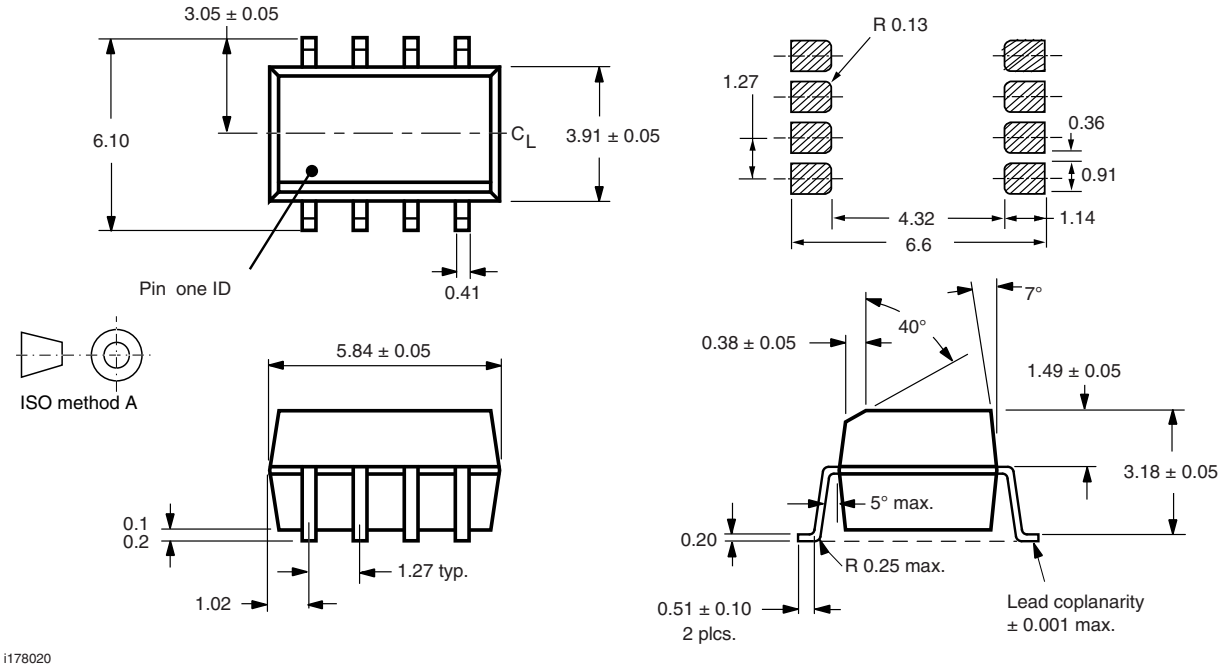

PACKAGE MARKING (example)

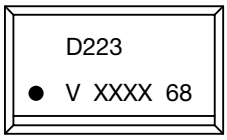

Notes

- XXXX = LMC (lot marking code)
- Tape and reel suffix (T) is not part of the package marking

For technical questions, contact: optocoupler.answers@vishay.com
THIS DOCUMENT IS SUBJECT TO CHANGE WITHOUT NOTICE. THE PRODUCTS DESCRIBED HEREIN AND THIS DOCUMENT ARE SUBJECT TO SPECIFIC DISCLAIMERS, SET FORTH AT www.vishay.com/doc?91000

Disclaimer

ALL PRODUCT, PRODUCT SPECIFICATIONS AND DATA ARE SUBJECT TO CHANGE WITHOUT NOTICE TO IMPROVE RELIABILITY, FUNCTION OR DESIGN OR OTHERWISE.

Vishay Intertechnology, Inc., its affiliates, agents, and employees, and all persons acting on its or their behalf (collectively, “Vishay”), disclaim any and all liability for any errors, inaccuracies or incompleteness contained in any datasheet or in any other disclosure relating to any product.

Vishay makes no warranty, representation or guarantee regarding the suitability of the products for any particular purpose or the continuing production of any product. To the maximum extent permitted by applicable law, Vishay disclaims (i) any and all liability arising out of the application or use of any product, (ii) any and all liability, including without limitation special, consequential or incidental damages, and (iii) any and all implied warranties, including warranties of fitness for particular purpose, non-infringement and merchantability.

Statements regarding the suitability of products for certain types of applications are based on Vishay's knowledge of typical requirements that are often placed on Vishay products in generic applications. Such statements are not binding statements about the suitability of products for a particular application. It is the customer's responsibility to validate that a particular product with the properties described in the product specification is suitable for use in a particular application. Parameters provided in datasheets and / or specifications may vary in different applications and performance may vary over time. All operating parameters, including typical parameters, must be validated for each customer application by the customer's technical experts. Product specifications do not expand or otherwise modify Vishay's terms and conditions of purchase, including but not limited to the warranty expressed therein.

Hyperlinks included in this datasheet may direct users to third-party websites. These links are provided as a convenience and for informational purposes only. Inclusion of these hyperlinks does not constitute an endorsement or an approval by Vishay of any of the products, services or opinions of the corporation, organization or individual associated with the third-party website. Vishay disclaims any and all liability and bears no responsibility for the accuracy, legality or content of the third-party website or for that of subsequent links.

Vishay products are not designed for use in life-saving or life-sustaining applications or any application in which the failure of the Vishay product could result in personal injury or death unless specifically qualified in writing by Vishay. Customers using or selling Vishay products not expressly indicated for use in such applications do so at their own risk. Please contact authorized Vishay personnel to obtain written terms and conditions regarding products designed for such applications.

No license, express or implied, by estoppel or otherwise, to any intellectual property rights is granted by this document or by any conduct of Vishay. Product names and markings noted herein may be trademarks of their respective owners.

© 2024 VISHAY INTERTECHNOLOGY, INC. ALL RIGHTS RESERVED

THIS DOCUMENT IS SUBJECT TO CHANGE WITHOUT NOTICE. THE PRODUCTS DESCRIBED HEREIN AND THIS DOCUMENT ARE SUBJECT TO SPECIFIC DISCLAIMERS, SET FORTH AT www.vishay.com/doc?91000