Optocoupler, Photodarlington Output, (Single, Dual, Quad Channel)

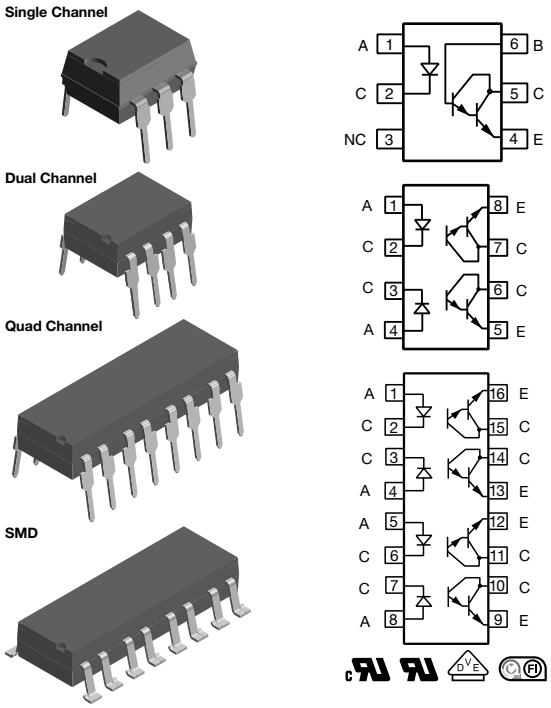

DESCRIPTION

The IL30 single, ILD55 dual, and ILQ30, ILQ31, ILQ55 quad are optically coupled isolators with gallium arsenide infrared emitters and silicon photodarlington sensors. Switching can be achieved while maintaining a high degree of isolation between driving and load circuits, with no crosstalk between channels. These optocouplers can be used to replace reed and mercury relays with advantages of long life, high speed switching and elimination of magnetic fields.

The ILD55 is designed to reduce board space requirements in high density applications.

FEATURES

- 125 mA load current rating
- Fast rise time, 10 µs
- Fast fall time, 35 µs
- Single, dual, and quad channel
- Solid state reliability
- Standard DIP packages
- Material categorization: for definitions of compliance please see www.vishay.com/doc?99912

Pb-free

e3

RoHS COMPLIANT

AGENCY APPROVALS

- UL 1577
- cUL
- DIN EN 60747-5-5 (VDE 0884-5) (IL30)
- DIN EN 60747-5-5 (VDE 0884-5)
- BSI (IL30)
- CQC
- FIMKO (IL30)
- FIMKO

LINKS TO ADDITIONAL RESOURCES

3D Models | Design Tools | Related Documents

For technical questions, contact: optocoupleranswers@vishay.com

THIS DOCUMENT IS SUBJECT TO CHANGE WITHOUT NOTICE. THE PRODUCTS DESCRIBED HEREIN AND THIS DOCUMENT ARE SUBJECT TO SPECIFIC DISCLAIMERS, SET FORTH AT www.vishay.com/doc?91000

ORDERING INFORMATION

I	L	x	#	#	-	X	0	0	#	T

PART NUMBER — PACKAGE OPTION — TAPE AND REEL

x = D (Dual) or Q (Quad)

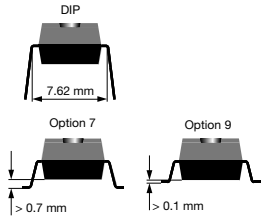

AGENCY CERTIFIED / PACKAGE	SINGLE CHANNEL	DUAL CHANNEL	QUAD CHANNEL	
	CTR			
UL, cUL, FIMKO	≥ 100	≥ 100	≥ 100	≥ 200
DIP-6	IL30	-	-	-
DIP-8	-	ILD55	-	-
SMD-8, option 7	-	ILD55-X007	-	-
SMD-8, option 9	-	ILD55-X009	-	-
DIP-16	-	-	ILQ30, ILQ55	ILQ31
SMD-16, option 9	-	-	ILQ55-X009T (1)	-

Notes

- Additional options may be possible, please contact sales office

(1) Also available in tubes, do not put “T” on the end

ABSOLUTE MAXIMUM RATINGS (T_{amb} = 25 °C, unless otherwise specified)

PARAMETER	TEST CONDITION	PART	SYMBOL	VALUE	UNIT
INPUT					
Peak reverse voltage			V_{RM}	3	V
Forward continuous current			I_F	60	mA
Power dissipation			P_{diss}	100	mW
Derate linearly from 25 °C				1.33	mW/°C
OUTPUT					
Collector emitter breakdown voltage		IL30	BV_{CEO}	30	V
		ILQ30	BV_{CEO}	30	V
		ILD55	BV_{CEO}	55	V
		ILQ55	BV_{CEO}	55	V
Collector (load) current			I_C	125	mA
Power dissipation			P_{diss}	150	mW
Derate linearly from 25 °C				2	mW/°C
COUPLER					
Total package power dissipation		IL30	P_{tot}	250	mW
		ILD55	P_{tot}	400	mW
		ILQ30	P_{tot}	500	mW
		ILQ31	P_{tot}	500	mW
		ILQ55	P_{tot}	500	mW
Derate linearly from 25 °C		IL30		3.3	mW/°C
		ILD55		3.3	mW/°C
		ILQ30		6.67	mW/°C
		ILQ31		6.67	mW/°C
		ILQ55		6.67	mW/°C
Storage temperature			T_{stg}	-55 to +125	°C
Operating temperature			T_{amb}	-55 to +100	°C
Lead soldering time at 260 °C				10	s

Note

- Stresses in excess of the absolute maximum ratings can cause permanent damage to the device. Functional operation of the device is not implied at these or any other conditions in excess of those given in the operational sections of this document. Exposure to absolute maximum ratings for extended periods of the time can adversely affect reliability.

For technical questions, contact: optocoupleranswers@vishay.com

THIS DOCUMENT IS SUBJECT TO CHANGE WITHOUT NOTICE. THE PRODUCTS DESCRIBED HEREIN AND THIS DOCUMENT ARE SUBJECT TO SPECIFIC DISCLAIMERS, SET FORTH AT www.vishay.com/doc?91000

ELECTRICAL CHARACTERISTICS (T_{amb} = 25 °C, unless otherwise specified)						
PARAMETER	**TEST CONDITION**	**SYMBOL**	**MIN.**	**TYP.**	**MAX.**	**UNIT**
INPUT						
Forward voltage	I_F = 20 mA	V_F	-	1.25	1.5	V
Reverse current	V_R = 3 V	I_R	-	0.1	10	µA
Capacitance	V_R = 0 V	C_O	-	25		pF
OUTPUT						
Collector emitter breakdown voltage	I_C = 100 µA	BV_{CEO}	30 / 55	-	-	V
Collector emitter leakage current	V_{CE} = 10 V, I_F = 0 A	I_{CEO}	-	1	100	nA
Collector emitter capacitance	V_{CE} = 10 V, f = 1 MHz	C_{CE}	-	3.4	-	pF
COUPLER						
Collector emitter saturation voltage	I_C = 50 mA, I_F = 50 mA	V_{CEsat}	-	0.9	1	V
Capacitance (input to output)		C_{IO}	-	0.5	-	pF

Note

- Minimum and maximum values are testing requirements. Typical values are characteristics of the device and are the result of engineering evaluation. Typical values are for information only and are not part of the testing requirements.

CURRENT TRANSFER RATIO (T_{amb} = 25 °C, unless otherwise specified)							
PARAMETER	**TEST CONDITION**	**PART**	**SYMBOL**	**MIN.**	**TYP.**	**MAX.**	**UNIT**
Current transfer ratio	I_F = 10 mA, V_{CE} = 5 V	IL30	CTR	100	400	-	%
		ILD55	CTR	100	400	-	%
		ILQ30	CTR	100	400	-	%
		ILQ55	CTR	100	400	-	%
		ILQ31	CTR	200	400	-	%

SWITCHING CHARACTERISTICS (T_{amb} = 25 °C, unless otherwise specified)						
PARAMETER	**TEST CONDITION**	**SYMBOL**	**MIN.**	**TYP.**	**MAX.**	**UNIT**
Rise time	V_{CC} = 13.5 V, I_F = 50 mA, R_L = 100 Ω	t_r	-	10	-	µs
Fall time	V_{CC} = 13.5 V, I_F = 50 mA, R_L = 100 Ω	t_f	-	35	-	µs

SAFETY AND INSULATION RATINGS				
PARAMETER	**TEST CONDITION**	**SYMBOL**	**VALUE**	**UNIT**
Climatic classification	According to IEC 68 part 1		55 / 100 / 21	
Comparative tracking index		CTI	175	
Maximum rated withstanding isolation voltage	t = 1 min	V_{ISO}	4420	V_{RMS}
Maximum transient isolation voltage		V_{IOTM}	10 000	V_{peak}
Maximum repetitive peak isolation voltage		V_{IORM}	890	V_{peak}
Isolation resistance	V_{IO} = 500 V, T_{amb} = 25 °C	R_{IO}	≥ 10^{12}	Ω
	V_{IO} = 500 V, T_{amb} = 100 °C	R_{IO}	≥ 10^{11}	Ω
Output safety power		P_{SO}	400	mW
Input safety current		I_{SI}	275	mA
Safety temperature		T_S	175	°C
Creepage distance			≥ 7	mm
Clearance distance			≥ 7	mm
Insulation thickness		DTI	≥ 0.4	mm

Note

- As per IEC 60747-5-5, § 7.4.3.8.2, this optocoupler is suitable for “safe electrical insulation” only within the safety ratings. Compliance with the safety ratings shall be ensured by means of protective circuits.

For technical questions, contact: optocoupleranswers@vishay.com

THIS DOCUMENT IS SUBJECT TO CHANGE WITHOUT NOTICE. THE PRODUCTS DESCRIBED HEREIN AND THIS DOCUMENT ARE SUBJECT TO SPECIFIC DISCLAIMERS, SET FORTH AT www.vishay.com/doc?91000

TYPICAL CHARACTERISTICS (T_{amb} = 25 °C, unless otherwise specified)

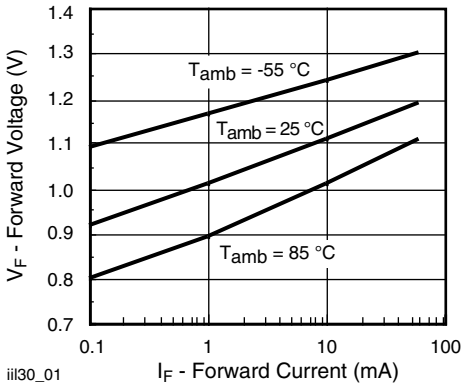

Fig. 1 - Forward Voltage vs. Forward Current

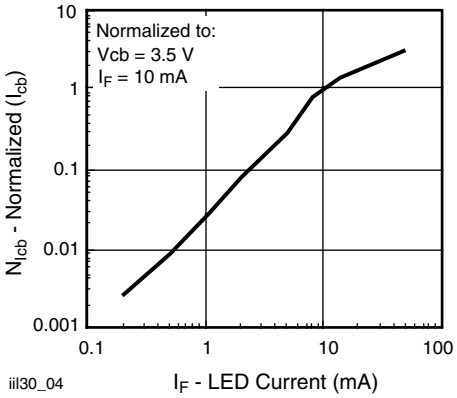

Fig. 4 - Normalized Collector Base Photocurrent vs. LED Current

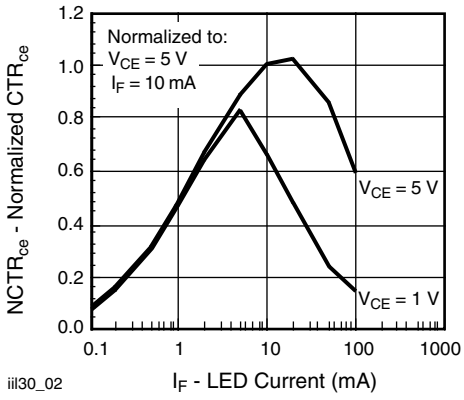

Fig. 2 - Normalized Non-Saturated and Saturated CTR_{CE} vs. LED Current

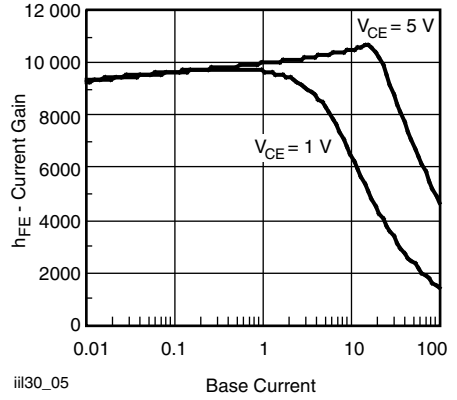

Fig. 5 - h_{FE} Current Gain vs. Base Current

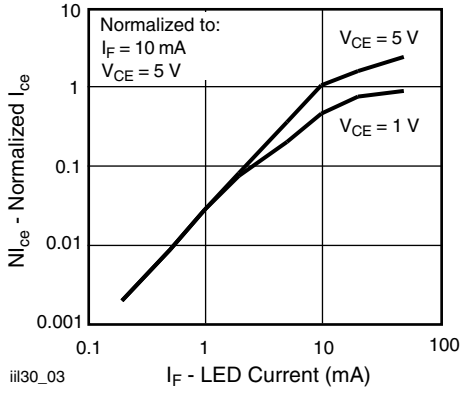

Fig. 3 - Normalized Non-Saturated and Saturated Collector Emitter Current vs. LED Current

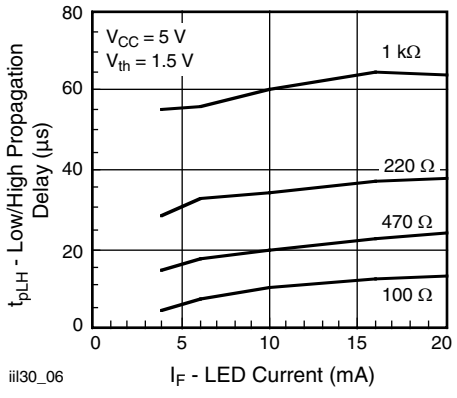

Fig. 6 - Low to High Propagation Delay vs. Collector Load Resistance and LED Current

For technical questions, contact: optocoupleranswers@vishay.com

THIS DOCUMENT IS SUBJECT TO CHANGE WITHOUT NOTICE. THE PRODUCTS DESCRIBED HEREIN AND THIS DOCUMENT ARE SUBJECT TO SPECIFIC DISCLAIMERS, SET FORTH AT www.vishay.com/doc?91000

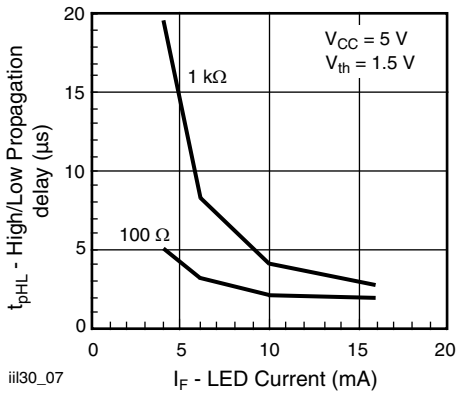

Fig. 7 - High to Low Propagation Delay vs. Collector Load Resistance and LED Current

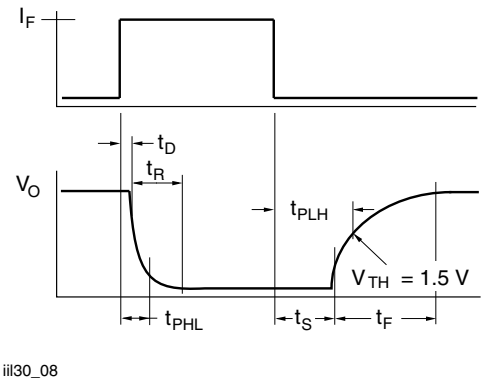

Fig. 8 - Switching Waveform

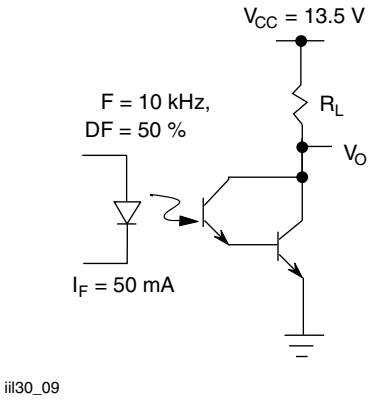

Fig. 9 - Switching Schematic

For technical questions, contact: optocoupleranswers@vishay.com

THIS DOCUMENT IS SUBJECT TO CHANGE WITHOUT NOTICE. THE PRODUCTS DESCRIBED HEREIN AND THIS DOCUMENT ARE SUBJECT TO SPECIFIC DISCLAIMERS, SET FORTH AT www.vishay.com/doc?91000

PACKAGE DIMENSIONS in millimeters

DIP-6

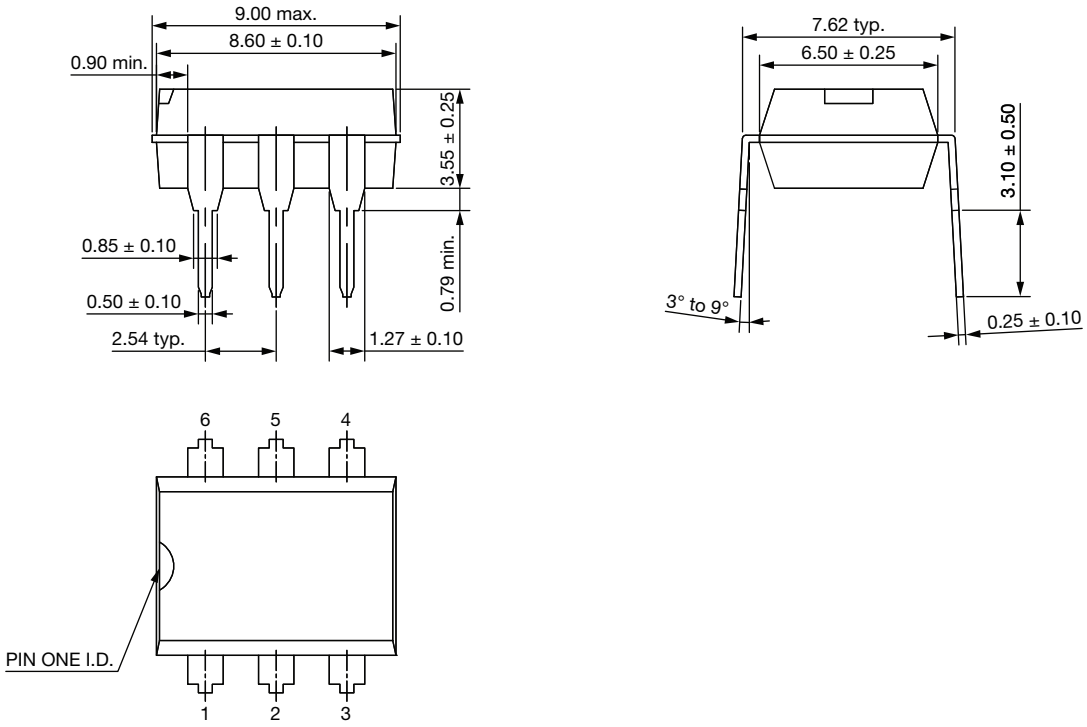

DIP-8

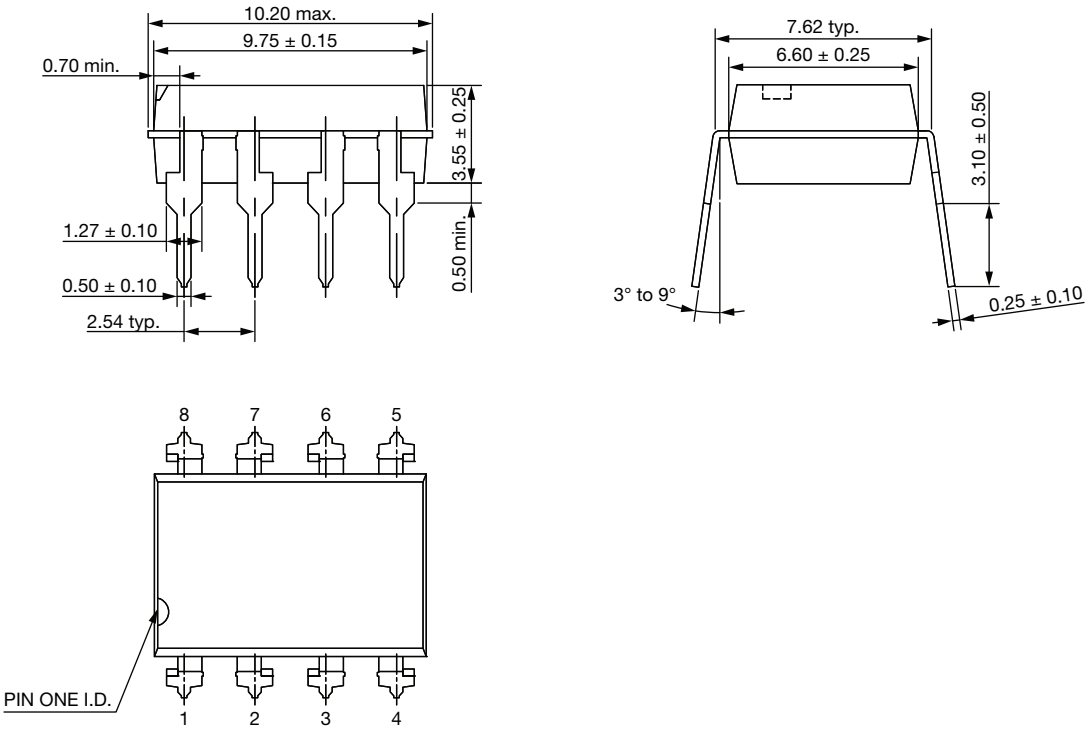

For technical questions, contact: optocoupleranswers@vishay.com

THIS DOCUMENT IS SUBJECT TO CHANGE WITHOUT NOTICE. THE PRODUCTS DESCRIBED HEREIN AND THIS DOCUMENT ARE SUBJECT TO SPECIFIC DISCLAIMERS, SET FORTH AT www.vishay.com/doc?91000

DIP-16

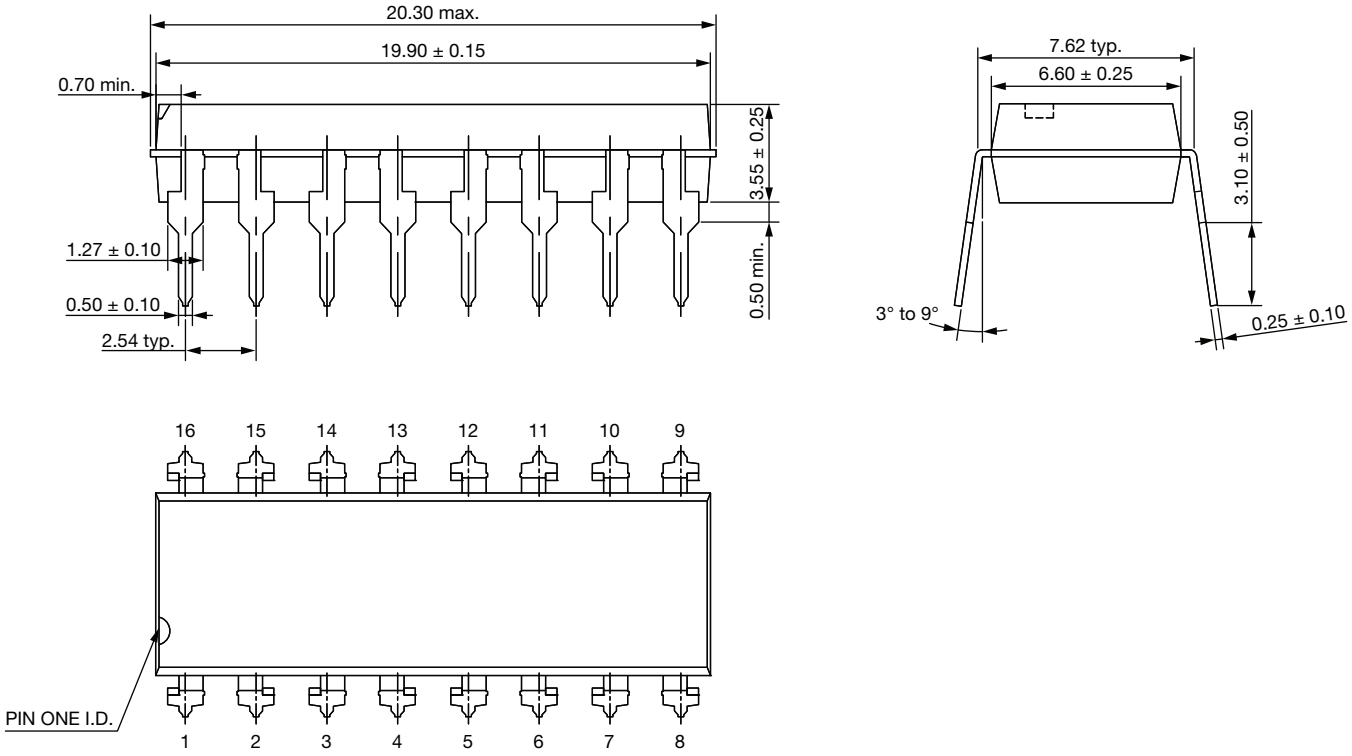

SMD-8, Option 7

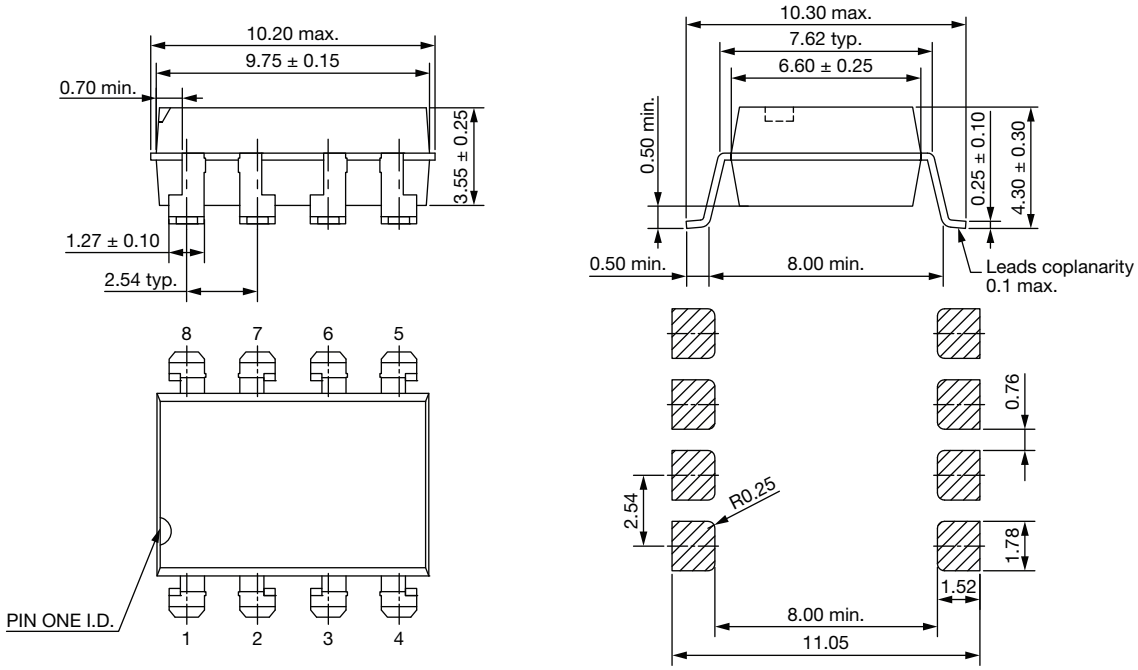

For technical questions, contact: optocoupleranswers@vishay.com

THIS DOCUMENT IS SUBJECT TO CHANGE WITHOUT NOTICE. THE PRODUCTS DESCRIBED HEREIN AND THIS DOCUMENT ARE SUBJECT TO SPECIFIC DISCLAIMERS, SET FORTH AT www.vishay.com/doc?91000

SMD-8, Option 9

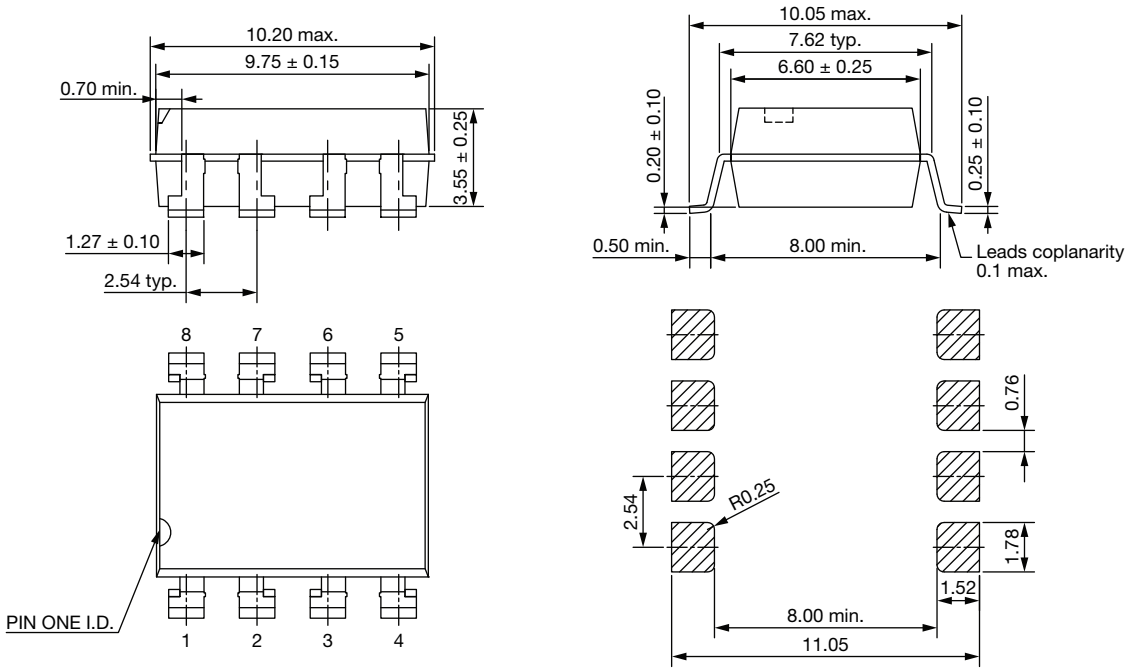

SMD-16, Option 9

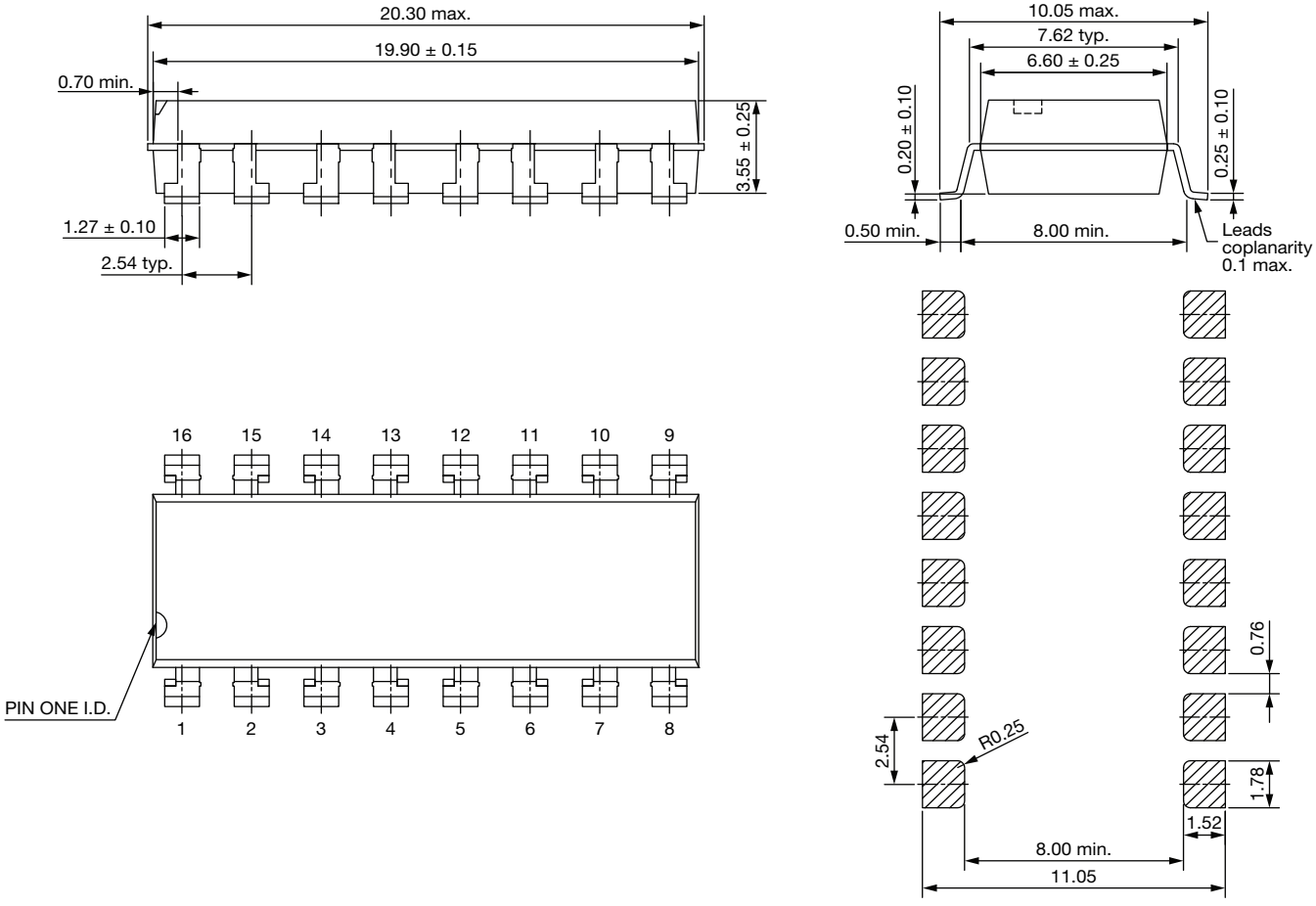

For technical questions, contact: optocoupleranswers@vishay.com

THIS DOCUMENT IS SUBJECT TO CHANGE WITHOUT NOTICE. THE PRODUCTS DESCRIBED HEREIN AND THIS DOCUMENT ARE SUBJECT TO SPECIFIC DISCLAIMERS, SET FORTH AT www.vishay.com/doc?91000

PACKAGE MARKING (example)

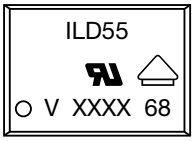

Notes

- XXXX = LMC (lot marking code)
- Only option 1 and 7 reflected in the package marking
- The VDE logo is only marked on option 1 parts
- Tape and reel suffix (T) is not part of the package marking

For technical questions, contact: optocoupleranswers@vishay.com

THIS DOCUMENT IS SUBJECT TO CHANGE WITHOUT NOTICE. THE PRODUCTS DESCRIBED HEREIN AND THIS DOCUMENT ARE SUBJECT TO SPECIFIC DISCLAIMERS, SET FORTH AT www.vishay.com/doc?91000

Disclaimer

ALL PRODUCT, PRODUCT SPECIFICATIONS AND DATA ARE SUBJECT TO CHANGE WITHOUT NOTICE TO IMPROVE RELIABILITY, FUNCTION OR DESIGN OR OTHERWISE.

Vishay Intertechnology, Inc., its affiliates, agents, and employees, and all persons acting on its or their behalf (collectively, “Vishay”), disclaim any and all liability for any errors, inaccuracies or incompleteness contained in any datasheet or in any other disclosure relating to any product.

Vishay makes no warranty, representation or guarantee regarding the suitability of the products for any particular purpose or the continuing production of any product. To the maximum extent permitted by applicable law, Vishay disclaims (i) any and all liability arising out of the application or use of any product, (ii) any and all liability, including without limitation special, consequential or incidental damages, and (iii) any and all implied warranties, including warranties of fitness for particular purpose, non-infringement and merchantability.

Statements regarding the suitability of products for certain types of applications are based on Vishay's knowledge of typical requirements that are often placed on Vishay products in generic applications. Such statements are not binding statements about the suitability of products for a particular application. It is the customer's responsibility to validate that a particular product with the properties described in the product specification is suitable for use in a particular application. Parameters provided in datasheets and / or specifications may vary in different applications and performance may vary over time. All operating parameters, including typical parameters, must be validated for each customer application by the customer's technical experts. Product specifications do not expand or otherwise modify Vishay's terms and conditions of purchase, including but not limited to the warranty expressed therein.

Hyperlinks included in this datasheet may direct users to third-party websites. These links are provided as a convenience and for informational purposes only. Inclusion of these hyperlinks does not constitute an endorsement or an approval by Vishay of any of the products, services or opinions of the corporation, organization or individual associated with the third-party website. Vishay disclaims any and all liability and bears no responsibility for the accuracy, legality or content of the third-party website or for that of subsequent links.

Vishay products are not designed for use in life-saving or life-sustaining applications or any application in which the failure of the Vishay product could result in personal injury or death unless specifically qualified in writing by Vishay. Customers using or selling Vishay products not expressly indicated for use in such applications do so at their own risk. Please contact authorized Vishay personnel to obtain written terms and conditions regarding products designed for such applications.

No license, express or implied, by estoppel or otherwise, to any intellectual property rights is granted by this document or by any conduct of Vishay. Product names and markings noted herein may be trademarks of their respective owners.

© 2024 VISHAY INTERTECHNOLOGY, INC. ALL RIGHTS RESERVED

THIS DOCUMENT IS SUBJECT TO CHANGE WITHOUT NOTICE. THE PRODUCTS DESCRIBED HEREIN AND THIS DOCUMENT ARE SUBJECT TO SPECIFIC DISCLAIMERS, SET FORTH AT www.vishay.com/doc?91000