Optocoupler, Phototransistor Output (Dual, Quad Channel)

Dual Channel

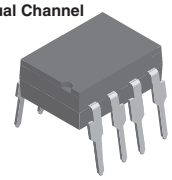

Quad Channel

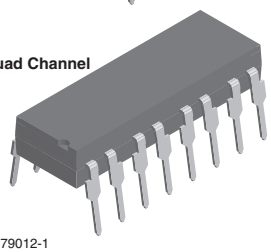

i179012-1

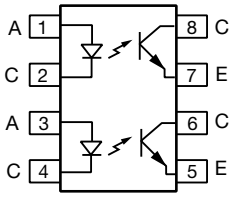

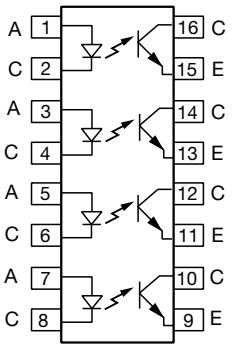

LINKS TO ADDITIONAL RESOURCES

3D Models | Design Tools | Related Documents | SPICE Models

DESCRIPTION

The ILD615, ILQ615 are multi-channel phototransistor optocouplers that use GaAs IRED emitters and high gain NPN phototransistors. These devices are constructed using over / under leadframe optical coupling and double molded insulation technology resulting a withstand test voltage of 7500 VAC_{PEAK} and a working voltage of 1700 V_{RMS}.

The binned min./max. and linear CTR characteristics make these devices well suited for DC or AC voltage detection. Eliminating the phototransistor base connection provides added electrical noise immunity from the transients found in many industrial control environments.

Because of guaranteed maximum non-saturated and saturated switching characteristics, the ILD615, ILQ615 can be used in medium speed data I/O and control systems. The binned min. / max. CTR specification allow easy worst case interface calculations for both level detection and switching applications. Interfacing with a CMOS logic is enhanced by the guaranteed CTR at I_F = 1 mA.

FEATURES

- Identical channel to channel footprint
- Dual and quad packages feature:
  - Reduced board space
  - Lower pin and parts count
  - Better channel to channel CTR match
  - Improved common mode rejection
- Isolation rated voltage from double molded package, 4420 V_{RMS}
- Material categorization: for definitions of compliance please see www.vishay.com/doc?99912

Pb-free

e3

RoHS COMPLIANT

AGENCY APPROVALS

- UL 1577
- cUL
- DIN EN 60747-5-5 (VDE 0884-5), available with option 1
- CQC: GB8898
- FIMKO

For technical questions, contact: optocoupleranswers@vishay.com

THIS DOCUMENT IS SUBJECT TO CHANGE WITHOUT NOTICE. THE PRODUCTS DESCRIBED HEREIN AND THIS DOCUMENT ARE SUBJECT TO SPECIFIC DISCLAIMERS, SET FORTH AT www.vishay.com/doc?91000

ORDERING INFORMATION

I	L	x	6	1	5	-	#	X	0	#	#	T
PART NUMBER							CTR BIN	PACKAGE OPTION				TAPE AND REEL

x = D (Dual) or Q (Quad)

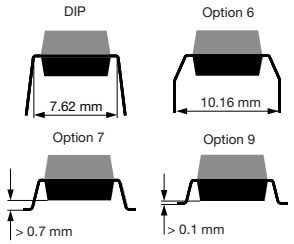

AGENCY CERTIFIED / PACKAGE	DUAL CHANNEL				QUAD CHANNEL			
	CTR (%)							
	10 mA							
UL, CSA	**40 to 80**	**63 to 125**	**100 to 200**	**160 to 320**	**40 to 80**	**63 to 125**	**100 to 200**	**160 to 320**
DIP-8	ILD615-1	ILD615-2	ILD615-3	ILD615-4	-	-	-	-
DIP-8, 400 mil, option 6	-	-	-	ILD615-4X006	-	-	-	-
SMD-8, option 7	ILD615-1X007T (1)	-	-	-	-	-	-	-
SMD-8, option 9	-	ILD615-2X009T	ILD615-3X009T	ILD615-4X009T	-	-	-	-
DIP-16	-	-	-	-	ILQ615-1	ILQ615-2	ILQ615-3	ILQ615-4
SMD-16, option 7	-	-	-	-	-	ILQ615-2X007	ILQ615-3X007T	-
SMD-16, option 9	-	-	-	-	ILQ615-1X009	-	ILQ615-3X009T (1)	ILQ615-4X009T (1)
UL, CSA, VDE	**40 to 80**	**63 to 125**	**100 to 200**	**160 to 320**	**40 to 80**	**63 to 125**	**100 to 200**	**160 to 320**
DIP-8	-	ILD615-2X001	-	ILD615-4X001	-	-	-	-
DIP-8, 400 mil, option 6	-	ILD615-2X016	-	ILD615-4X016	-	-	-	-
SMD-8, option 7	-	-	ILD615-3X017T (1)	-	-	-	-	-
DIP-16	-	-	-	-	-	-	-	ILQ615-4X001
DIP-16, 400 mil, option 6	-	-	-	-	-	-	ILQ615-3X016	-

Notes

- Additional options may be possible, please contact sales office

(1) Also available in tubes; do not add T to end

ABSOLUTE MAXIMUM RATINGS (T_{amb} = 25 °C, unless otherwise specified)

PARAMETER	TEST CONDITION	SYMBOL	VALUE	UNIT
INPUT				
Reverse voltage		V_R	6	V
Forward current		I_F	60	mA
Surge current		I_{FSM}	1.5	A
Power dissipation		P_{diss}	100	mW
Derate linearly from 25 °C			1.33	mW/°C
OUTPUT				
Collector emitter breakdown voltage		BV_{CEO}	70	V
Emitter collector breakdown voltage		BV_{ECO}	7	V
Collector current		I_C	50	mA
	t < 1 ms	I_C	100	mA
Power dissipation		P_{diss}	150	mW
Derate linearly from 25 °C			2	mW/°C

For technical questions, contact: optocoupleranswers@vishay.com

THIS DOCUMENT IS SUBJECT TO CHANGE WITHOUT NOTICE. THE PRODUCTS DESCRIBED HEREIN AND THIS DOCUMENT ARE SUBJECT TO SPECIFIC DISCLAIMERS, SET FORTH AT www.vishay.com/doc?91000

ABSOLUTE MAXIMUM RATINGS (T_{amb} = 25 °C, unless otherwise specified)				
PARAMETER	**TEST CONDITION**	**SYMBOL**	**VALUE**	**UNIT**
COUPLER				
Storage temperature		T_{stg}	-55 to +150	°C
Operating temperature		T_{amb}	-55 to +100	°C
Junction temperature		T_j	100	°C
Soldering temperature [1]	2 mm distance from case bottom	T_{sld}	260	°C
Package power dissipation ILD615			400	mW
Derate linearly from 25 °C			5.33	mW/°C
Package power dissipation ILQ615			500	mW
Derate linearly from 25 °C			6.67	mW/°C
Total power dissipation		P_{tot}	250	mW

Notes

- Stresses in excess of the absolute maximum ratings can cause permanent damage to the device. Functional operation of the device is not implied at these or any other conditions in excess of those given in the operational sections of this document. Exposure to absolute maximum ratings for extended periods of the time can adversely affect reliability.

(2) Refer to reflow profile for soldering conditions for surface mounted devices (SMD). Refer to wave profile for soldering conditions for through hole devices (DIP).

ELECTRICAL CHARACTERISTICS (T_{amb} = 25 °C, unless otherwise specified)						
PARAMETER	**TEST CONDITION**	**SYMBOL**	**MIN.**	**TYP.**	**MAX.**	**UNIT**
INPUT						
Forward voltage	I_F = 10 mA	V_F	1	1.15	1.3	V
Breakdown voltage	I_R = 10 µA	V_{BR}	6	30	-	V
Reverse current	V_R = 6 V	I_R	-	0.01	10	µA
Capacitance	V_R = 0 V, f = 1 MHz	C_O	-	25	-	pF
Thermal resistance, junction to lead		R_{THJL}	-	750	-	K/W
OUTPUT						
Collector emitter capacitance	V_{CE} = 5 V, f = 1 MHz	C_{CE}	-	6.8	-	pF
Collector emitter leakage current, -1, -2	V_{CE} = 10 V	I_{CEO}	-	2	50	nA
Collector emitter leakage current, -3, -4	V_{CE} = 10 V	I_{CEO}	-	5	100	nA
Collector emitter breakdown voltage	I_{CE} = 0.5 mA	BV_{CEO}	70	-	-	V
Emitter collector breakdown voltage	I_E = 0.1 mA	BV_{ECO}	7	-	-	V
Thermal resistance, junction to lead		R_{THJL}	-	500	-	K/W
PACKAGE TRANSFER CHARACTERISTICS						
Channel/channel CTR match	I_F = 10 mA, V_{CE} = 5 V	CTRX/CTRY	1 to 1	-	2 to 1	
COUPLER						
Capacitance (input to output)	V_{IO} = 0 V, f = 1 MHz	C_{IO}	-	0.8	-	pF
Channel to channel isolation			500	-	-	VAC

Note

- Minimum and maximum values are tested requirements. Typical values are characteristics of the device and are the result of engineering evaluations. Typical values are for information only and are not part of the testing requirements.

For technical questions, contact: optocoupleranswers@vishay.com

THIS DOCUMENT IS SUBJECT TO CHANGE WITHOUT NOTICE. THE PRODUCTS DESCRIBED HEREIN AND THIS DOCUMENT ARE SUBJECT TO SPECIFIC DISCLAIMERS, SET FORTH AT www.vishay.com/doc?91000

CURRENT TRANSFER RATIO (T_{amb} = 25 °C, unless otherwise specified)							
PARAMETER	**TEST CONDITION**	**PART**	**SYMBOL**	**MIN.**	**TYP.**	**MAX.**	**UNIT**
Current transfer ratio (collector emitter saturated)	I_F = 10 mA, V_{CE} = 0.4 V	ILD615-1	CTR_{CEsat}	-	25	-	%
		ILQ615-1					
		ILD615-2	CTR_{CEsat}	-	40	-	%
		ILQ615-2					
		ILD615-3	CTR_{CEsat}	-	60	-	%
		ILQ615-3					
		ILD615-4	CTR_{CEsat}	-	100	-	%
		ILQ615-4					
Current transfer ratio (collector emitter)	I_F = 1 mA, V_{CE} = 5 V	ILD615-1	CTR_{CE}	13	30	-	%
		ILQ615-1					
		ILD615-2	CTR_{CE}	22	45	-	%
		ILQ615-2					
		ILD615-3	CTR_{CE}	34	70	-	%
		ILQ615-3					
		ILD615-4	CTR_{CE}	56	90	-	%
		ILQ615-4					
	I_F = 10 mA, V_{CE} = 5 V	ILD615-1	CTR_{CE}	40	60	80	%
		ILQ615-1					
		ILD615-2	CTR_{CE}	63	80	125	%
		ILQ615-2					
		ILD615-3	CTR_{CE}	100	150	200	%
		ILQ615-3					
		ILD615-4	CTR_{CE}	160	200	320	%
		ILQ615-4					

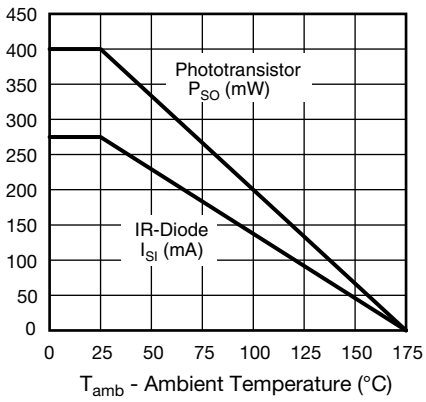

Fig. 1 - Derating Diagram

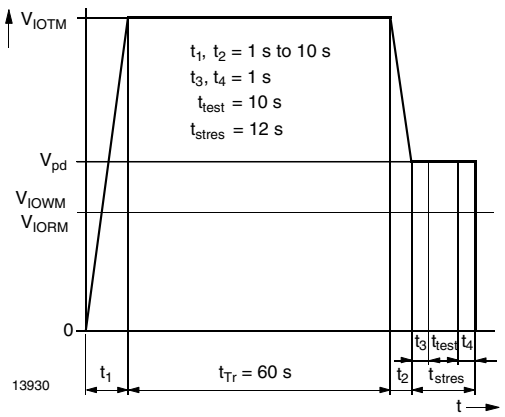

Fig. 2 - Test Pulse Diagram for Sample Test According to DIN EN 60747-5-2 (VDE0884); IEC60747-5-5

For technical questions, contact: optocoupleranswers@vishay.com

THIS DOCUMENT IS SUBJECT TO CHANGE WITHOUT NOTICE. THE PRODUCTS DESCRIBED HEREIN AND THIS DOCUMENT ARE SUBJECT TO SPECIFIC DISCLAIMERS, SET FORTH AT www.vishay.com/doc?91000

SWITCHING CHARACTERISTICS (T_{amb} = 25 °C, unless otherwise specified)							
PARAMETER	**TEST CONDITION**	**PART**	**SYMBOL**	**MIN.**	**TYP.**	**MAX.**	**UNIT**
NON-SATURATED							
Current	V_{CC} = 5 V, R_L = 75 Ω, 50 % of V_{PP}		I_F	-	10	-	mA
Turn-on time	V_{CC} = 5 V, R_L = 75 Ω, 50 % of V_{PP}		t_{on}	-	3	-	µs
Rise time	V_{CC} = 5 V, R_L = 75 Ω, 50 % of V_{PP}		t_r	-	2	-	µs
Turn-off time	V_{CC} = 5 V, R_L = 75 Ω, 50 % of V_{PP}		t_{off}	-	2.3	-	µs
Fall time	V_{CC} = 5 V, R_L = 75 Ω, 50 % of V_{PP}		t_f	-	2	-	µs
Propagation H to L	V_{CC} = 5 V, R_L = 75 Ω, 50 % of V_{PP}		t_{PHL}	-	1.1	-	µs
Propagation L to H	V_{CC} = 5 V, R_L = 75 Ω, 50 % of V_{PP}		t_{PLH}	-	2.5	-	µs
SATURATED							
Current	V_{CC} = 5 V, R_L = 1 kΩ, V_{TH} = 1.5 V	ILD615-1	I_F	-	20	-	mA
		ILQ615-1					
		ILD615-2	I_F	-	10	-	mA
		ILQ615-2					
		ILD615-3	I_F	-	10	-	mA
		ILQ615-3					
		ILD615-4	I_F	-	5	-	mA
		ILQ615-4					
Turn-on time	V_{CC} = 5 V, R_L = 1 kΩ, V_{TH} = 1.5 V	ILD615-1	t_{on}	-	3	-	µs
		ILQ615-1					
		ILD615-2	t_{on}	-	4.3	-	µs
		ILQ615-2					
		ILD615-3	t_{on}	-	4.3	-	µs
		ILQ615-3					
		ILD615-4	t_{on}	-	6	-	µs
		ILQ615-4					
Rise time	V_{CC} = 5 V, R_L = 1 kΩ, V_{TH} = 1.5 V	ILD615-1	t_r	-	2	-	µs
		ILQ1615-1					
		ILD615-2	t_r	-	2.8	-	µs
		ILQ615-2					
		ILD615-3	t_r	-	2.8	-	µs
		ILQ615-3					
		ILD615-4	t_r	-	4.6	-	µs
		ILQ615-4					
Turn-off time	V_{CC} = 5 V, R_L = 1 kΩ, V_{TH} = 1.5 V	ILD615-1	t_{off}	-	18	-	µs
		ILQ615-1					
		ILD615-2	t_{off}	-	25	-	µs
		ILQ615-2					
		ILD615-3	t_{off}	-	25	-	µs
		ILQ615-3					
		ILD615-4	t_{off}	-	25	-	µs
		ILQ615-4					
Fall time	V_{CC} = 5 V, R_L = 1 kΩ, V_{TH} = 1.5 V	ILD615-1	t_f	-	11	-	µs
		ILQ615-1					
		ILD615-2	t_f	-	14	-	µs
		ILQ615-2					
		ILD615-3	t_f	-	14	-	µs
		ILQ615-3					
		ILD615-4	t_f	-	15	-	µs
		ILQ615-4					

For technical questions, contact: optocoupleranswers@vishay.com
THIS DOCUMENT IS SUBJECT TO CHANGE WITHOUT NOTICE. THE PRODUCTS DESCRIBED HEREIN AND THIS DOCUMENT ARE SUBJECT TO SPECIFIC DISCLAIMERS, SET FORTH AT www.vishay.com/doc?91000

SWITCHING CHARACTERISTICS (T_{amb} = 25 °C, unless otherwise specified)							
PARAMETER	**TEST CONDITION**	**PART**	**SYMBOL**	**MIN.**	**TYP.**	**MAX.**	**UNIT**
SATURATED							
Propagation H to L	V_{CC} = 5 V, R_L = 1 kΩ, V_{TH} = 1.5 V	ILD615-1	t_{PHL}	-	1.6	-	µs
		ILQ615-1					
		ILD615-2	t_{PHL}	-	2.6	-	µs
		ILQ615-2					
		ILD615-3	t_{PHL}	-	2.6	-	µs
		ILQ615-3					
		ILD615-4	t_{PHL}	-	5.4	-	µs
		ILQ615-4					
Propagation L to H	V_{CC} = 5 V, R_L = 1 kΩ, V_{TH} = 1.5 V	ILD615-1	t_{PLH}	-	8.6	-	µs
		ILQ615-1					
		ILD615-2	t_{PLH}	-	7.2	-	µs
		ILQ615-2					
		ILD615-3	t_{PLH}	-	7.2	-	µs
		ILQ615-3					
		ILD615-4	t_{PLH}	-	7.4	-	µs
		ILQ615-4					

COMMON MODE TRANSIENT IMMUNITY (T_{amb} = 25 °C, unless otherwise specified)						
PARAMETER	**TEST CONDITION**	**SYMBOL**	**MIN.**	**TYP.**	**MAX.**	**UNIT**
Common mode rejection output high	V_{CM} = 50 V_{P-P}, R_L = 1 kΩ, I_F = 0 mA	CM_H	-	5000	-	V/µs
Common mode rejection output low	V_{CM} = 50 V_{P-P}, R_L = 1 kΩ, I_F = 0 mA	CM_L	-	5000	-	V/µs
Common mode coupling capacitance		C_{CM}	-	0.01	-	pF

SAFETY AND INSULATION RATINGS				
PARAMETER	**TEST CONDITION**	**SYMBOL**	**VALUE**	**UNIT**
Climatic classification	According to IEC 68 part 1		55 / 100 / 21	
Comparative tracking index		CTI	175	
Maximum rated withstanding isolation voltage	t = 1 min	V_{ISO}	4420	V_{RMS}
Maximum transient isolation voltage		V_{IOTM}	10 000	V_{peak}
Maximum repetitive peak isolation voltage		V_{IORM}	890	V_{peak}
Isolation resistance	V_{IO} = 500 V, T_{amb} = 25 °C	R_{IO}	≥ 10^{12}	Ω
	V_{IO} = 500 V, T_{amb} = 100 °C	R_{IO}	≥ 10^{11}	Ω
	V_{IO} = 500 V, T_{amb} = 175 °C (construction test only)	R_{IO}	≥ 10^{9}	Ω
Output safety power		P_{SO}	400	mW
Input safety current		I_{SI}	275	mA
Safety temperature		T_S	175	°C
Creepage distance			≥ 7	mm
Clearance distance			≥ 7	mm
Insulation thickness		DTI	≥ 0.4	mm
Partial discharge test voltage - routine test	100 %, t_{test} = 1 s	V_{pd}	1.669	kV_{peak}
Partial discharge test voltage - lot test (sample test)	t_{Tr} = 60 s, t_{test} = 10 s, (see Fig. 2)	V_{pd}	1.424	kV_{peak}

Note

- As per IEC 60747-5-5, § 7.4.3.8.2, this optocoupler is suitable for “safe electrical insulation” only within the safety ratings. Compliance with the safety ratings shall be ensured by means of protective circuits.

For technical questions, contact: optocoupleranswers@vishay.com
THIS DOCUMENT IS SUBJECT TO CHANGE WITHOUT NOTICE. THE PRODUCTS DESCRIBED HEREIN AND THIS DOCUMENT ARE SUBJECT TO SPECIFIC DISCLAIMERS, SET FORTH AT www.vishay.com/doc?91000

TYPICAL CHARACTERISTICS (T_{amb} = 25 °C, unless otherwise specified)

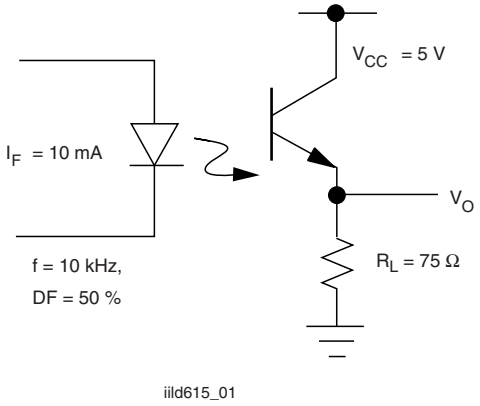

Fig. 1 Non-Saturated Switching Timing

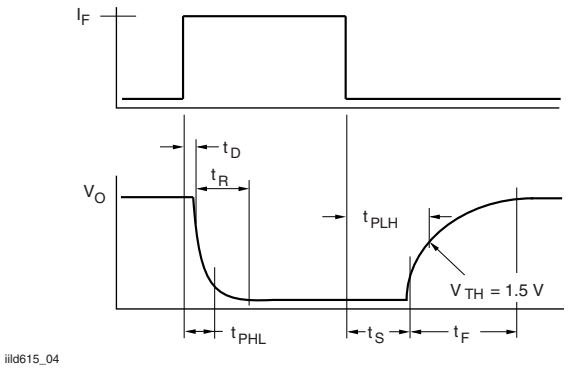

Fig. 5 - Saturated Switching Timing

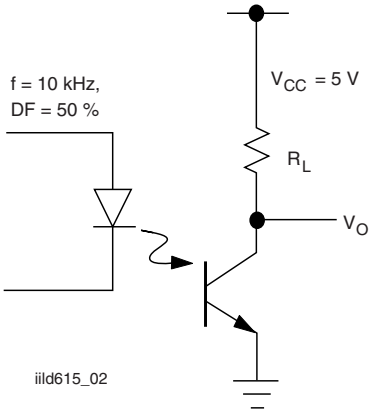

Fig. 3 - Saturated Switching Timing

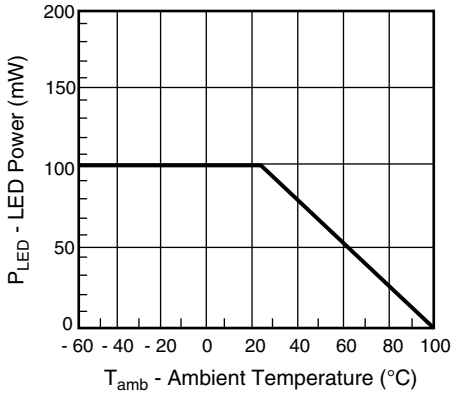

Fig. 6 - Maximum LED Power Dissipation

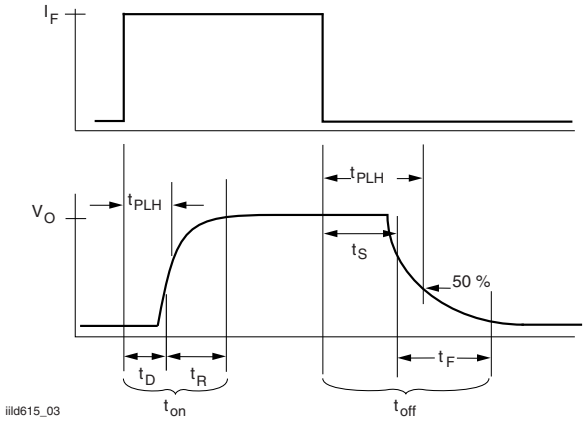

Fig. 4 - Non-Saturated Switching Timing

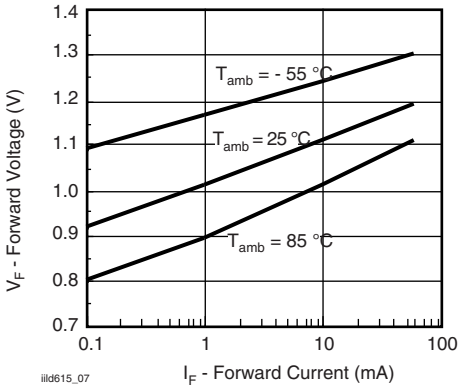

Fig. 7 - Forward Voltage vs. Forward Current

For technical questions, contact: optocoupleranswers@vishay.com
THIS DOCUMENT IS SUBJECT TO CHANGE WITHOUT NOTICE. THE PRODUCTS DESCRIBED HEREIN AND THIS DOCUMENT ARE SUBJECT TO SPECIFIC DISCLAIMERS, SET FORTH AT www.vishay.com/doc?91000

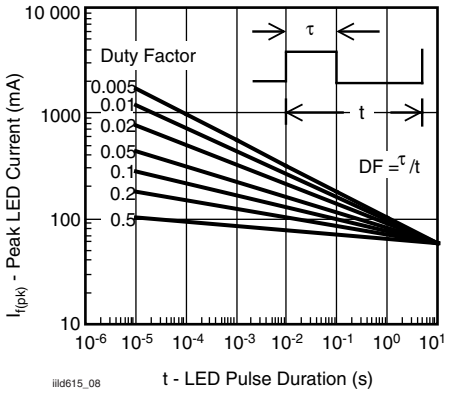

Fig. 8 - Peak LED Current vs. Pulse Duration, τ

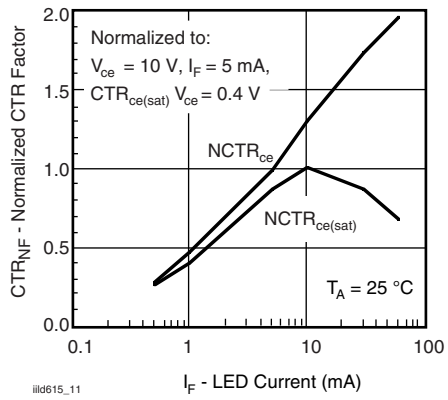

Fig. 11 - Normalization Factor
for Non-Saturated and Saturated CTR vs. I_F

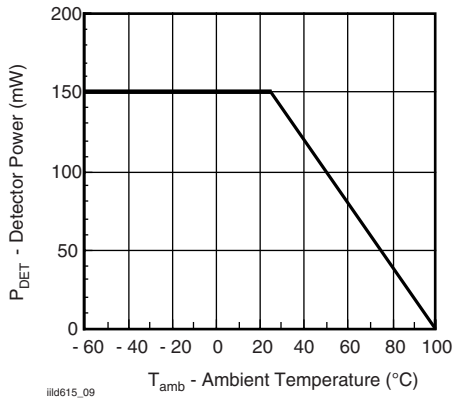

Fig. 9 - Maximum Detector Power Dissipation

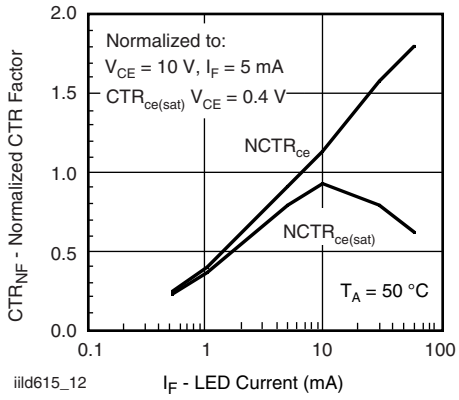

Fig. 12 - Normalization Factor
for Non-Saturated and Saturated CTR vs. I_F

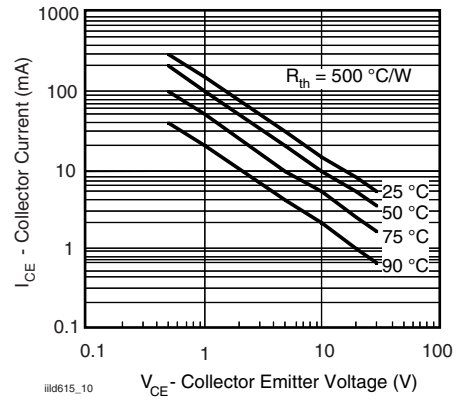

Fig. 10 - Maximum Collector Current vs. Collector Voltage

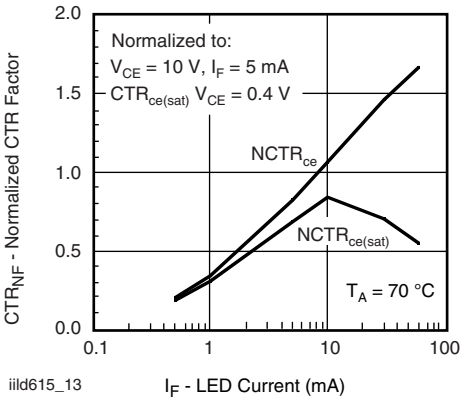

Fig. 13 - Normalization Factor
for Non-Saturated and Saturated CTR vs. I_F

For technical questions, contact: optocoupleranswers@vishay.com

THIS DOCUMENT IS SUBJECT TO CHANGE WITHOUT NOTICE. THE PRODUCTS DESCRIBED HEREIN AND THIS DOCUMENT ARE SUBJECT TO SPECIFIC DISCLAIMERS, SET FORTH AT www.vishay.com/doc?91000

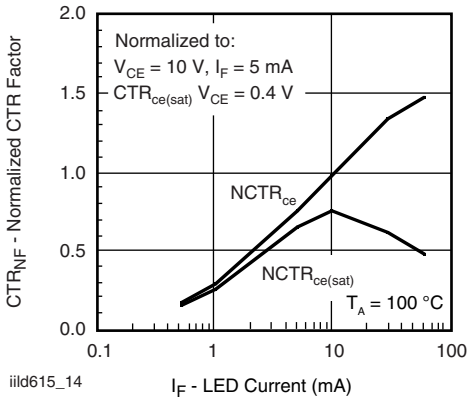

Fig. 14 - Normalization Factor
for Non-Saturated and Saturated CTR vs. I_F

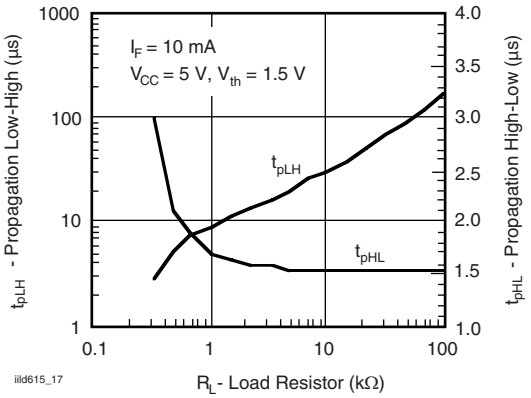

Fig. 17 - -1, Propagation Delay vs. Collector Load Resistor

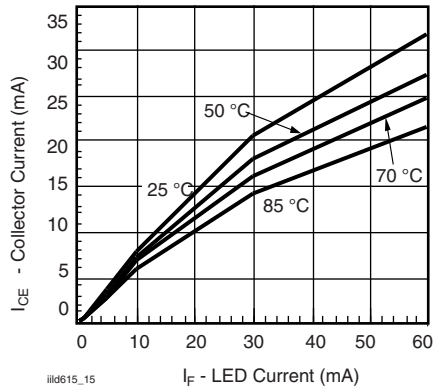

Fig. 15 - Collector Emitter Current vs.
Temperature and LED Current

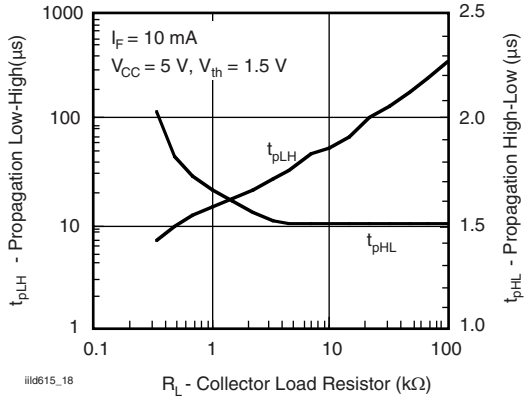

Fig. 18 - -2, -3, Propagation Delay vs. Collector Load Resistor

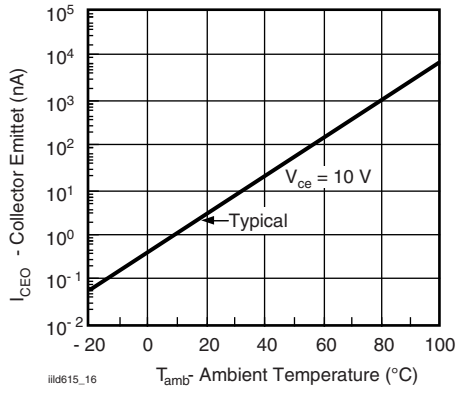

Fig. 16 - Collector Emitter Leakage vs. Temperature

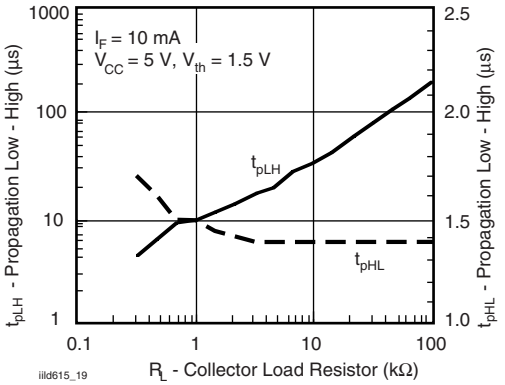

Fig. 19 - -4, Propagation Delay vs. Collector Load Resistor

For technical questions, contact: optocoupleranswers@vishay.com
THIS DOCUMENT IS SUBJECT TO CHANGE WITHOUT NOTICE. THE PRODUCTS DESCRIBED HEREIN AND THIS DOCUMENT
ARE SUBJECT TO SPECIFIC DISCLAIMERS, SET FORTH AT www.vishay.com/doc?91000

PACKAGE DIMENSIONS in millimeters

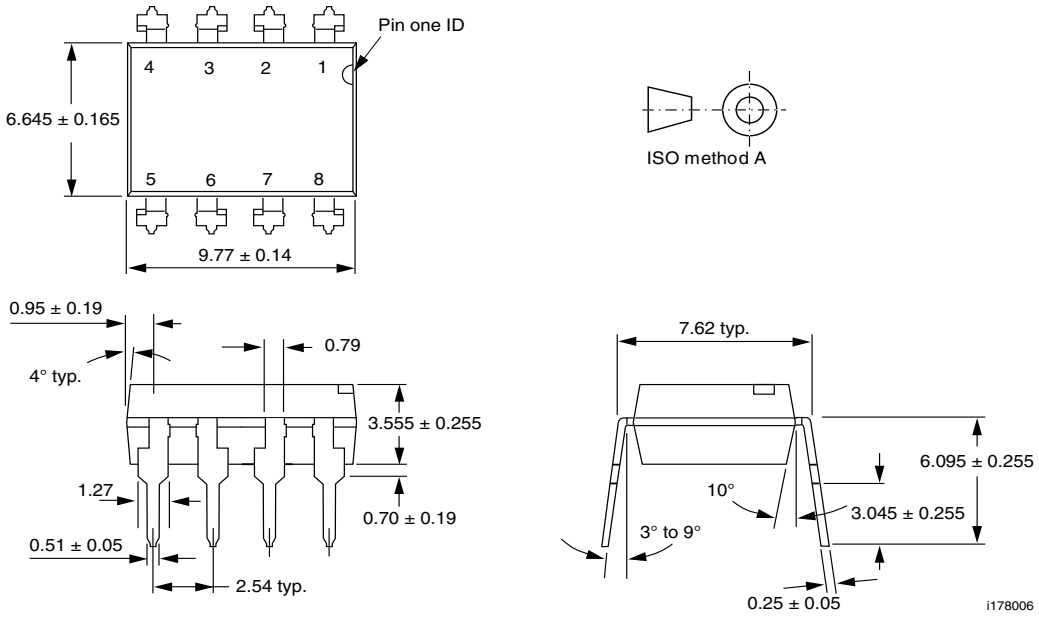

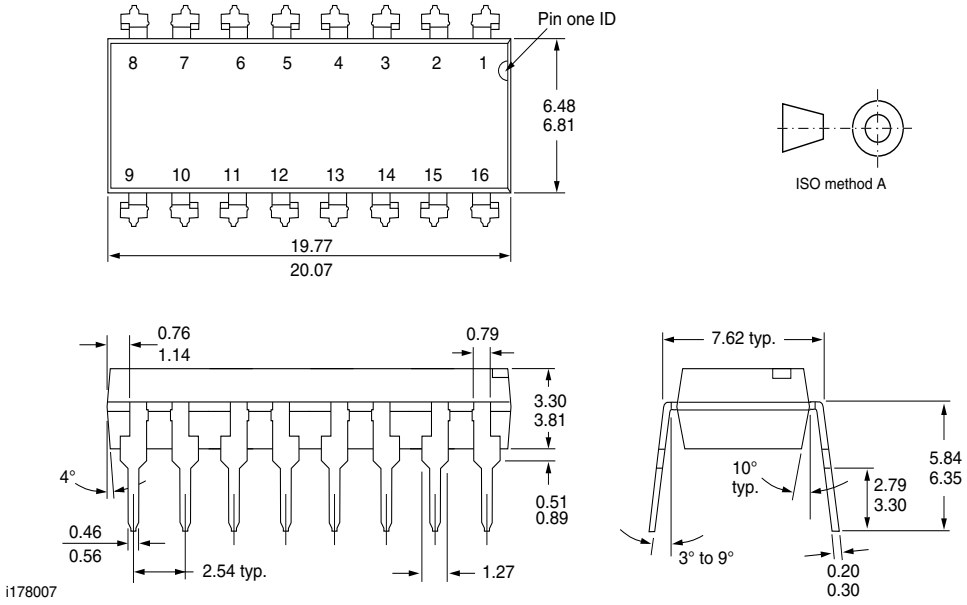

For technical questions, contact: optocoupleranswers@vishay.com

THIS DOCUMENT IS SUBJECT TO CHANGE WITHOUT NOTICE. THE PRODUCTS DESCRIBED HEREIN AND THIS DOCUMENT ARE SUBJECT TO SPECIFIC DISCLAIMERS, SET FORTH AT www.vishay.com/doc?91000

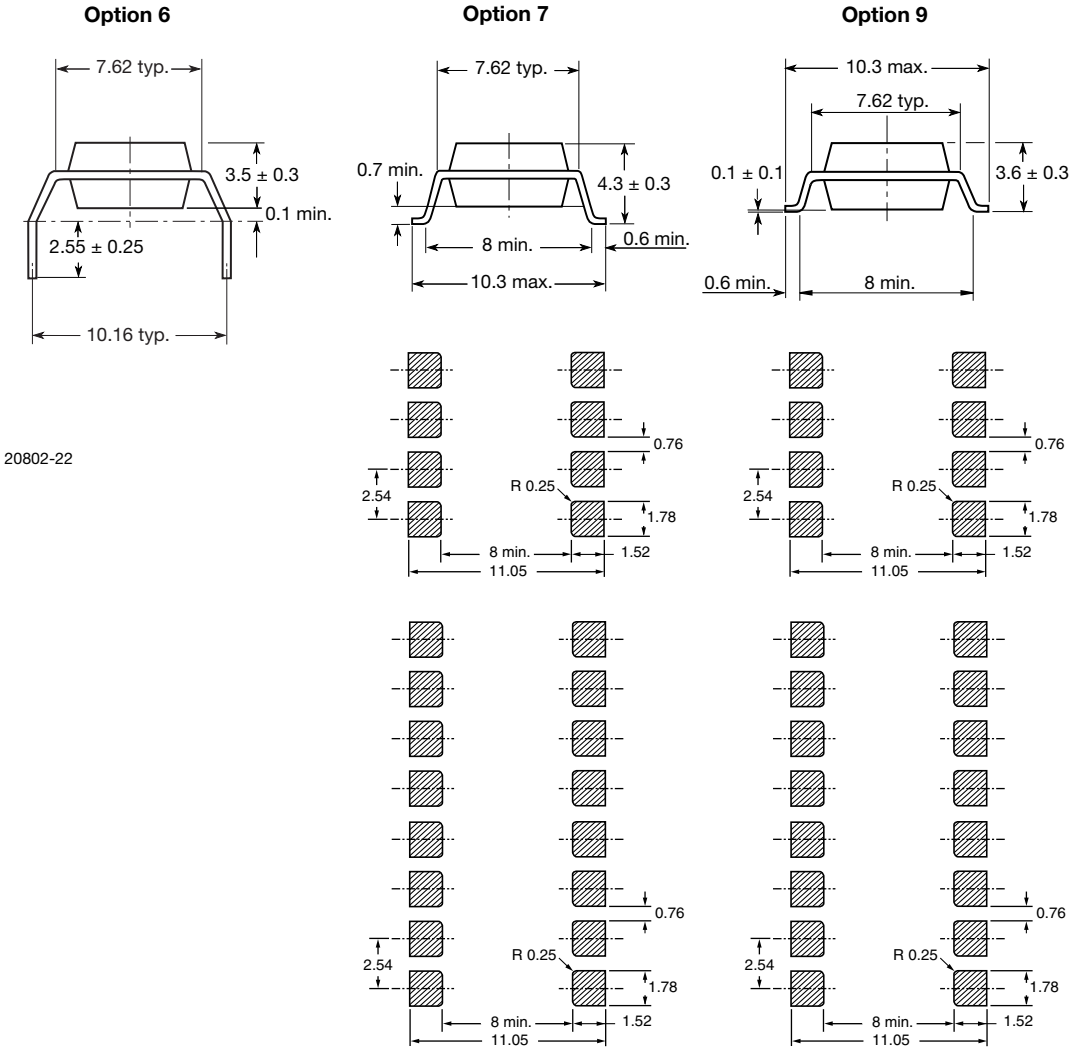

PACKAGE MARKING (example)

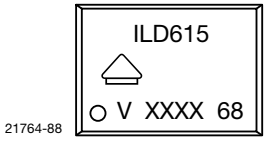

Notes

- XXXX = LMC (lot marking code)
- Only options 1 and 7 reflected in the package marking
- The VDE Logo is only marked on option1 parts
- Tape and reel suffix (T) is not part of the package marking

For technical questions, contact: optocoupleranswers@vishay.com
THIS DOCUMENT IS SUBJECT TO CHANGE WITHOUT NOTICE. THE PRODUCTS DESCRIBED HEREIN AND THIS DOCUMENT ARE SUBJECT TO SPECIFIC DISCLAIMERS, SET FORTH AT www.vishay.com/doc?91000

Disclaimer

ALL PRODUCT, PRODUCT SPECIFICATIONS AND DATA ARE SUBJECT TO CHANGE WITHOUT NOTICE TO IMPROVE RELIABILITY, FUNCTION OR DESIGN OR OTHERWISE.

Vishay Intertechnology, Inc., its affiliates, agents, and employees, and all persons acting on its or their behalf (collectively, “Vishay”), disclaim any and all liability for any errors, inaccuracies or incompleteness contained in any datasheet or in any other disclosure relating to any product.

Vishay makes no warranty, representation or guarantee regarding the suitability of the products for any particular purpose or the continuing production of any product. To the maximum extent permitted by applicable law, Vishay disclaims (i) any and all liability arising out of the application or use of any product, (ii) any and all liability, including without limitation special, consequential or incidental damages, and (iii) any and all implied warranties, including warranties of fitness for particular purpose, non-infringement and merchantability.

Statements regarding the suitability of products for certain types of applications are based on Vishay's knowledge of typical requirements that are often placed on Vishay products in generic applications. Such statements are not binding statements about the suitability of products for a particular application. It is the customer's responsibility to validate that a particular product with the properties described in the product specification is suitable for use in a particular application. Parameters provided in datasheets and / or specifications may vary in different applications and performance may vary over time. All operating parameters, including typical parameters, must be validated for each customer application by the customer's technical experts. Product specifications do not expand or otherwise modify Vishay's terms and conditions of purchase, including but not limited to the warranty expressed therein.

Hyperlinks included in this datasheet may direct users to third-party websites. These links are provided as a convenience and for informational purposes only. Inclusion of these hyperlinks does not constitute an endorsement or an approval by Vishay of any of the products, services or opinions of the corporation, organization or individual associated with the third-party website. Vishay disclaims any and all liability and bears no responsibility for the accuracy, legality or content of the third-party website or for that of subsequent links.

Vishay products are not designed for use in life-saving or life-sustaining applications or any application in which the failure of the Vishay product could result in personal injury or death unless specifically qualified in writing by Vishay. Customers using or selling Vishay products not expressly indicated for use in such applications do so at their own risk. Please contact authorized Vishay personnel to obtain written terms and conditions regarding products designed for such applications.

No license, express or implied, by estoppel or otherwise, to any intellectual property rights is granted by this document or by any conduct of Vishay. Product names and markings noted herein may be trademarks of their respective owners.

© 2024 VISHAY INTERTECHNOLOGY, INC. ALL RIGHTS RESERVED

THIS DOCUMENT IS SUBJECT TO CHANGE WITHOUT NOTICE. THE PRODUCTS DESCRIBED HEREIN AND THIS DOCUMENT ARE SUBJECT TO SPECIFIC DISCLAIMERS, SET FORTH AT www.vishay.com/doc?91000