Optocoupler, Phototriac Output, Non-Zero Crossing, 400 V_{DRM}

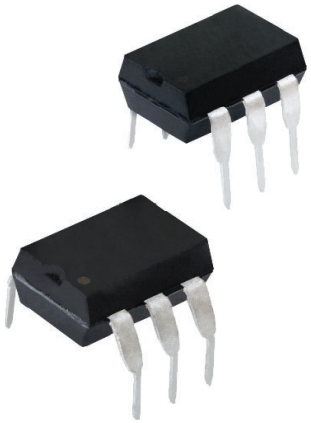

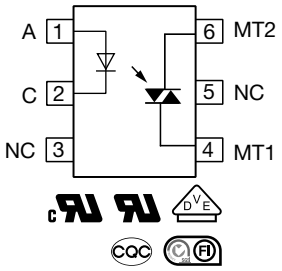

FEATURES

- 400 V blocking voltage
- Wide range of trigger current
- 100 mA_{RMS} on-state current
- Wide temperature range -55 °C to +100 °C
- Material categorization: for definitions of compliance please see www.vishay.com/doc?99912

Pb-free

e3

RoHS COMPLIANT

APPLICATIONS

- Power TRIAC driver
- Isolated AC load switch
- Air condition
- Heaters
- White goods
- Industrial controls
- Office equipment

AGENCY APPROVALS

- UL
- cUL
- DIN EN 60747-5-5 (VDE 0884-5)
- CQC: GB4943-1-2011
- CQC: GB8898-2011
- FIMKO

DESCRIPTION

The K3020P, K3020PG series consists of a phototriac optically coupled to a gallium arsenide infrared-emitting diode in a 6-lead plastic dual inline package.

The non-zero crossing functionality enables full wave control. Featuring galvanic and electrical noise isolation, the output is able to directly switch AC loads or drive medium to high power TRIACs.

ORDERING INFORMATION

K 3 0 2 — PART NUMBER

X — TRIGGER CURRENT BIN

P G — PACKAGE OPTION

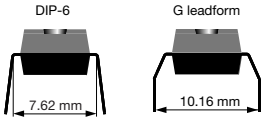

AGENCY CERTIFIED / PACKAGE	TRIGGER CURRENT, I_{FT}			
VDE, cUL, BSI	**5 mA**	**10 mA**	**15 mA**	**30 mA**
DIP-6	K3023P	K3022P	K3021P	K3020P
DIP-6, 400 mil	K3023PG	K3022PG	K3021PG	K3020PG

Note

- Additional options may be possible, please contact sales office.

For technical questions, contact: optocoupleranswers@vishay.com

THIS DOCUMENT IS SUBJECT TO CHANGE WITHOUT NOTICE. THE PRODUCTS DESCRIBED HEREIN AND THIS DOCUMENT ARE SUBJECT TO SPECIFIC DISCLAIMERS, SET FORTH AT www.vishay.com/doc?91000

ABSOLUTE MAXIMUM RATINGS (T_{amb} = 25 °C, unless otherwise specified)				
PARAMETER	**TEST CONDITION**	**SYMBOL**	**VALUE**	**UNIT**
INPUT				
Reverse voltage		V_R	5	V
Forward current		I_F	80	mA
Surge current	P.W. < 10 µs	I_{FSM}	3	A
Power dissipation		P_{diss}	100	mW
Junction temperature		T_j	125	°C
OUTPUT				
Peak off-state voltage		V_{DRM}	400	V
On-state RMS current		$I_{D(RMS)}$	100	mA
Peak surge current	$t_p \leq 10$ ms	I_{FSM}	1.5	A
Power dissipation		P_{diss}	300	mW
Junction temperature		T_j	125	°C
COUPLER				
Total power dissipation		P_{tot}	350	mW
Storage temperature range		T_{stg}	-55 to +150	°C
Ambient temperature		T_{amb}	-55 to +100	°C
Lead soldering temperature	2 mm from case, t < 10 s	T_{sld}	260	°C

Note

- Stresses in excess of the absolute maximum ratings can cause permanent damage to the device. Functional operation of the device is not implied at these or any other conditions in excess of those given in the operational sections of this document. Exposure to absolute maximum ratings for extended periods of the time can adversely affect reliability.

ELECTRICAL CHARACTERISTICS (T_{amb} = 25 °C, unless otherwise specified)							
PARAMETER	**TEST CONDITION**	**PART**	**SYMBOL**	**MIN.**	**TYP.**	**MAX.**	**UNIT**
INPUT							
Forward voltage	I_F = 50 mA		V_F	-	1.3	1.6	V
Reverse voltage	I_R = 10 µA		V_R	5	-	-	V
Junction capacitance	V_R = 0 V, f = 1 MHz		C_j	-	50	-	pF
OUTPUT							
Forward peak off-state voltage (repetitive)	I_{DRM} = 100 nA		V_{DRM} (1)	400	-	-	V
Peak on-state voltage	I_{TM} = 100 mA		V_{TM}	-	1.5	3	V
Critical rate of rise of off-state voltage	I_F = 0 A, V_D = 0.67 V_{DRM}		dV/dt_{cr}	-	10	-	V/µs
Critical rate of rise of on-state current commutation	V_D = 30 V_{RMS}, I_D = 15 mA_{RMS}		dV/dt_{crq}	0.1	0.15	-	V/µs
COUPLER (2)							
Emitting diode trigger current	V_S = 3 V, R_L = 150 Ω	K3020P	I_{FT}	-	15	30	mA
		K3020PG	I_{FT}	-	15	30	mA
		K3021P	I_{FT}	-	8	15	mA
		K3021PG	I_{FT}	-	8	15	mA
		K3022P	I_{FT}	-	5	10	mA
		K3022PG	I_{FT}	-	5	10	mA
		K3023P	I_{FT}	-	3	5	mA
		K3023PG	I_{FT}	-	3	5	mA
Holding current	I_F = 10 mA, $V_S \geq 3$ V		I_H	-	200	-	µA

Notes

- Minimum and maximum values are testing requirements. Typical values are characteristics of the device and are the result of engineering evaluation. Typical values are for information only and are not part of the testing requirements.

(1) Test voltage must be applied within dV/dt ratings.

(2) I_{FT} is defined as a minimum trigger current.

For technical questions, contact: optocoupleranswers@vishay.com

THIS DOCUMENT IS SUBJECT TO CHANGE WITHOUT NOTICE. THE PRODUCTS DESCRIBED HEREIN AND THIS DOCUMENT ARE SUBJECT TO SPECIFIC DISCLAIMERS, SET FORTH AT www.vishay.com/doc?91000

SAFETY AND INSULATION RATINGS				
PARAMETER	**TEST CONDITION**	**SYMBOL**	**VALUE**	**UNIT**
Climatic classification	According to IEC 68 part 1		55 / 100 / 21	
Pollution degree	According to DIN VDE 0109		2	
Comparative tracking index	Insulation group IIIa	CTI	175	
Maximum rated withstanding isolation voltage	According to UL1577, t = 1 min	V_{ISO}	4420	V_{RMS}
Tested withstanding isolation voltage	According to UL1577, t = 1 s	V_{ISO}	5300	V_{RMS}
Maximum transient isolation voltage	According to DIN EN 60747-5-5	V_{IOTM}	8000	V_{peak}
Maximum repetitive peak isolation voltage	According to DIN EN 60747-5-5	V_{IORM}	890	V_{peak}
Isolation resistance	V_{IO} = 500 V, T_{amb} = 25 °C	R_{IO}	≥ 10^{12}	Ω
	V_{IO} = 500 V, T_{amb} = 100 °C	R_{IO}	≥ 10^{11}	Ω
Output safety power		P_{SO}	265	mW
Input safety current		I_{SI}	130	mA
Input safety temperature		T_S	150	°C
Creepage distance	DIP-6		≥ 7	mm
Clearance distance			≥ 7	mm
Creepage distance	DIP-6, 400 mil		≥ 8	mm
Clearance distance			≥ 8	mm
Insulation thickness		DTI	≥ 0.4	mm
Input to output test voltage, method A	V_{IORM} x 1.6 = V_{PR}, 100 % sample test with t_M = 10 s, partial discharge < 5 pC	V_{PR}	1424	V_{peak}

Note

- As per IEC 60747-5-5, § 7.4.3.8.2, this optocoupler is suitable for “safe electrical insulation” only within the safety ratings. Compliance with the safety ratings shall be ensured by means of protective circuits.

TYPICAL CHARACTERISTICS (T_{amb} = 25 °C, unless otherwise specified)

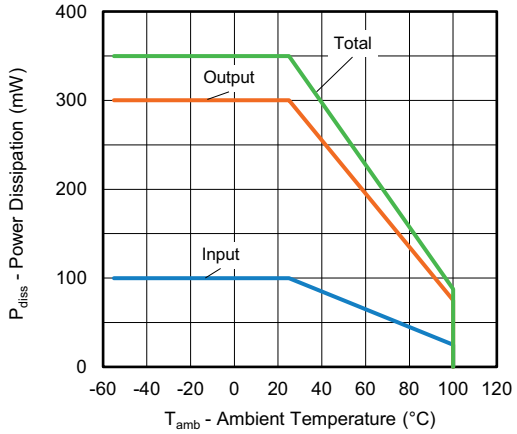

Fig. 1 - Total Power Dissipation vs. Ambient Temperature

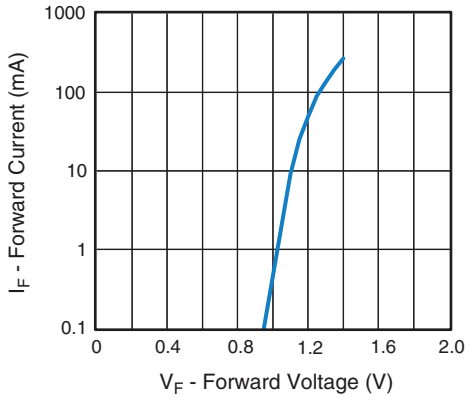

Fig. 2 - Forward Current vs. Forward Voltage

For technical questions, contact: optocoupleranswers@vishay.com

THIS DOCUMENT IS SUBJECT TO CHANGE WITHOUT NOTICE. THE PRODUCTS DESCRIBED HEREIN AND THIS DOCUMENT ARE SUBJECT TO SPECIFIC DISCLAIMERS, SET FORTH AT www.vishay.com/doc?91000

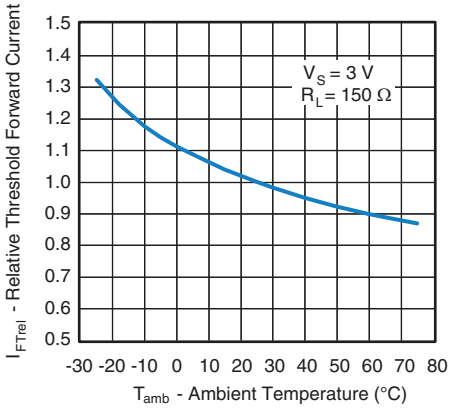

Fig. 3 - Relative Threshold Forward Current vs. Ambient Temperature

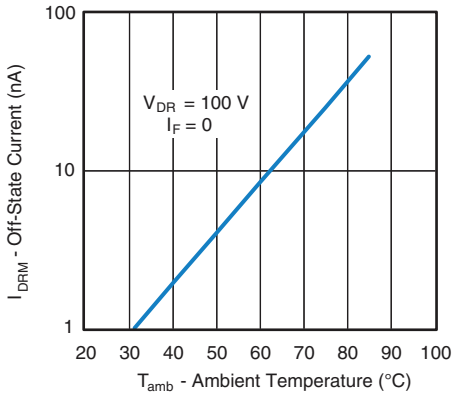

Fig. 5 - Off-State Current vs. Ambient Temperature

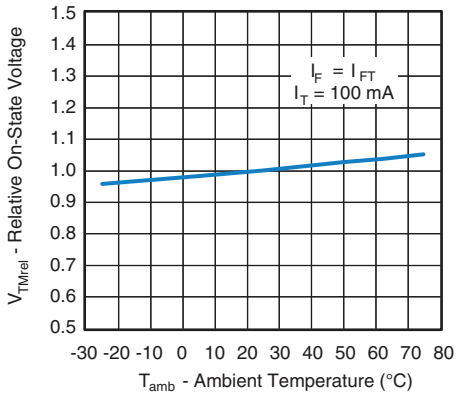

Fig. 4 - Relative On-State vs. Ambient Temperature

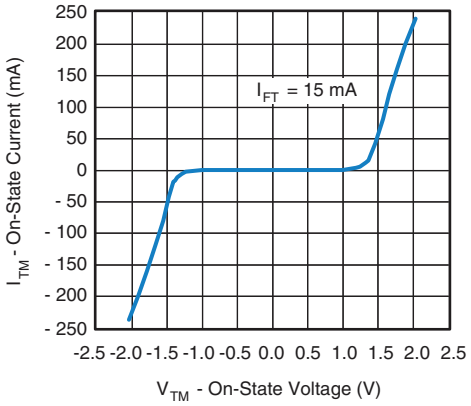

Fig. 6 - On-State Current vs. On-State Voltage

For technical questions, contact: optocoupleranswers@vishay.com

THIS DOCUMENT IS SUBJECT TO CHANGE WITHOUT NOTICE. THE PRODUCTS DESCRIBED HEREIN AND THIS DOCUMENT ARE SUBJECT TO SPECIFIC DISCLAIMERS, SET FORTH AT www.vishay.com/doc?91000

PACKAGE DIMENSIONS (in millimeters)

DIP-6

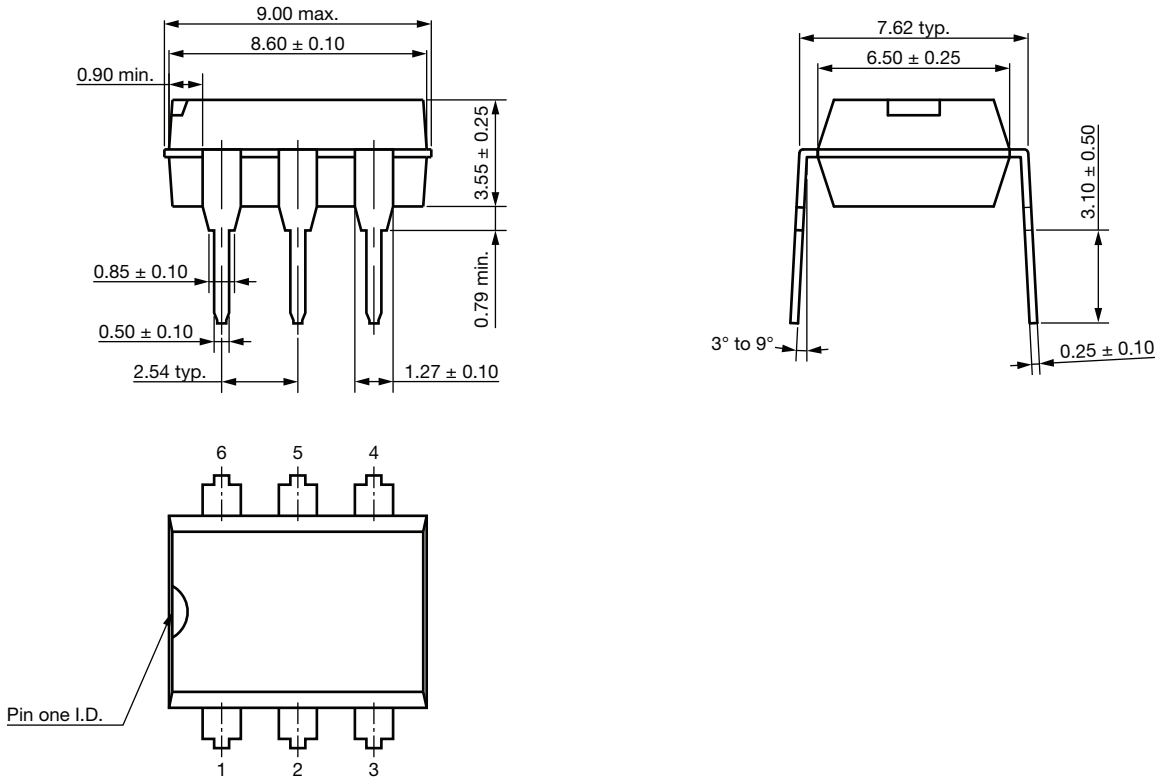

DIP-6, 400 mil

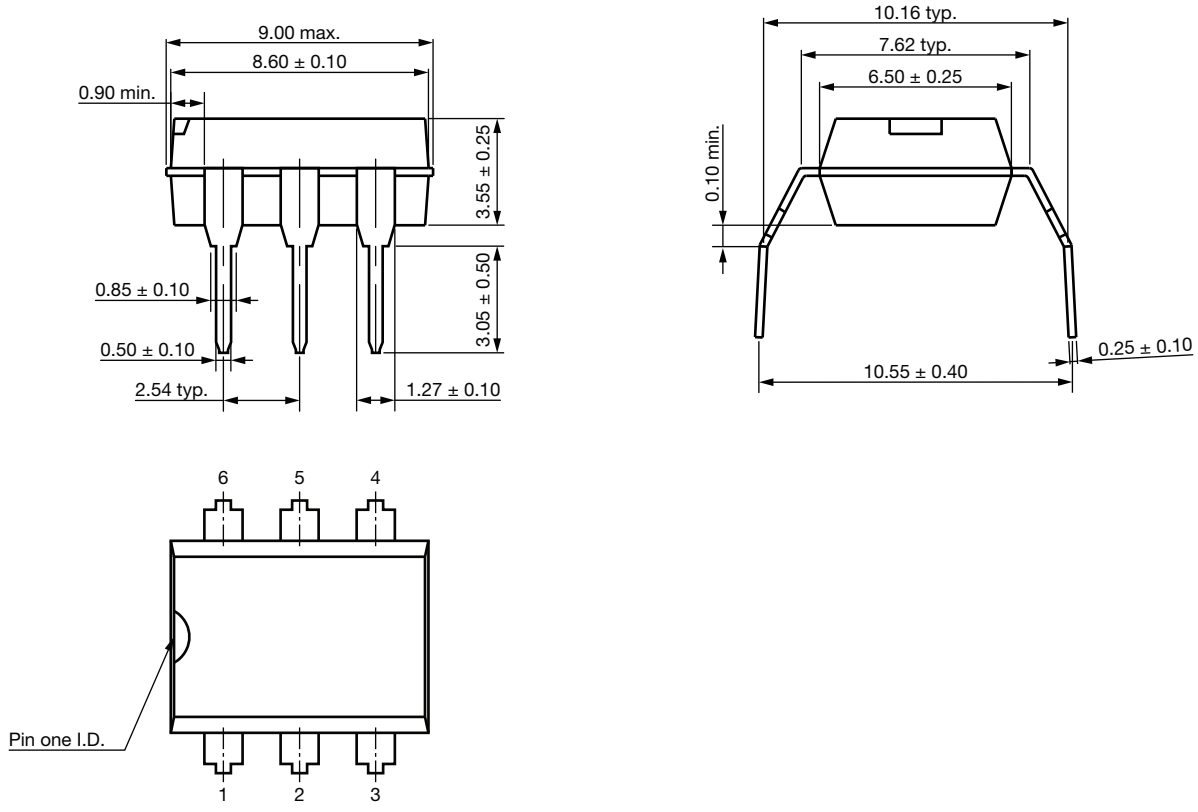

For technical questions, contact: optocoupleranswers@vishay.com

THIS DOCUMENT IS SUBJECT TO CHANGE WITHOUT NOTICE. THE PRODUCTS DESCRIBED HEREIN AND THIS DOCUMENT ARE SUBJECT TO SPECIFIC DISCLAIMERS, SET FORTH AT www.vishay.com/doc?91000

PACKAGE MARKING

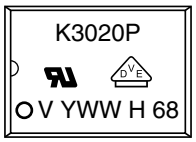

Fig. 7 - Example of K3020P

Notes

- The “G” of the G leadform type is not marked on the body.
- The VDE logo is only marked on ption1 parts.

PACKAGING INFORMATION (in millimeters)

DIP-6

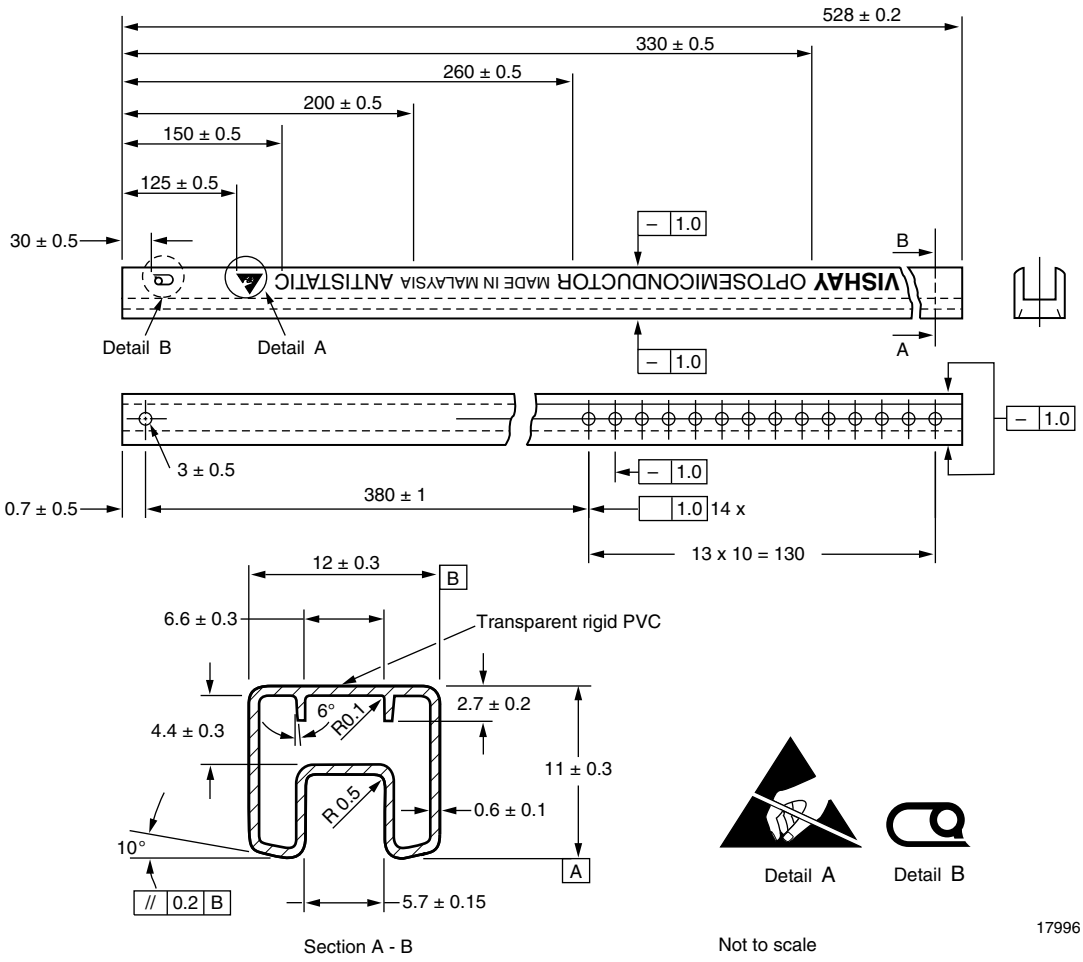

For technical questions, contact: optocoupleranswers@vishay.com

THIS DOCUMENT IS SUBJECT TO CHANGE WITHOUT NOTICE. THE PRODUCTS DESCRIBED HEREIN AND THIS DOCUMENT ARE SUBJECT TO SPECIFIC DISCLAIMERS, SET FORTH AT www.vishay.com/doc?91000

DIP-6, 400 mil

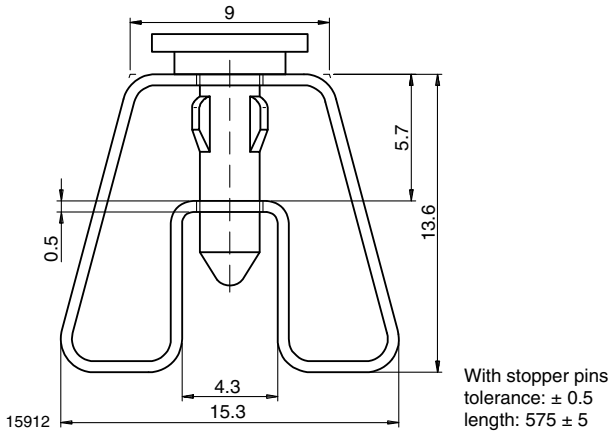

SHIPPING INFORMATION

DEVICES PER TUBS			
TYPE	UNITS/TUBE	TUBES/BOX	UNITS/BOX
DIP-6	50	40	2000

SOLDER PROFILES

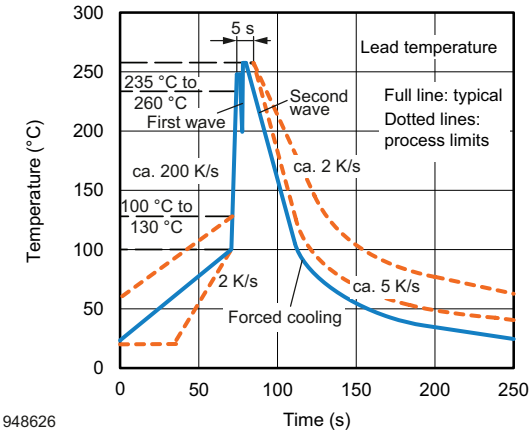

Fig. 8 - Wave Soldering Double Wave Profile According to J-STD-020 for DIP Devices

HANDLING AND STORAGE CONDITIONS

ESD level: HBM class 2

Floor life: unlimited

Conditions: T_{amb} < 30 °C, RH < 85 %

Moisture sensitivity level 1, according to J-STD-020

For technical questions, contact: optocoupleranswers@vishay.com

THIS DOCUMENT IS SUBJECT TO CHANGE WITHOUT NOTICE. THE PRODUCTS DESCRIBED HEREIN AND THIS DOCUMENT ARE SUBJECT TO SPECIFIC DISCLAIMERS, SET FORTH AT www.vishay.com/doc?91000

Disclaimer

ALL PRODUCT, PRODUCT SPECIFICATIONS AND DATA ARE SUBJECT TO CHANGE WITHOUT NOTICE TO IMPROVE RELIABILITY, FUNCTION OR DESIGN OR OTHERWISE.

Vishay Intertechnology, Inc., its affiliates, agents, and employees, and all persons acting on its or their behalf (collectively, “Vishay”), disclaim any and all liability for any errors, inaccuracies or incompleteness contained in any datasheet or in any other disclosure relating to any product.

Vishay makes no warranty, representation or guarantee regarding the suitability of the products for any particular purpose or the continuing production of any product. To the maximum extent permitted by applicable law, Vishay disclaims (i) any and all liability arising out of the application or use of any product, (ii) any and all liability, including without limitation special, consequential or incidental damages, and (iii) any and all implied warranties, including warranties of fitness for particular purpose, non-infringement and merchantability.

Statements regarding the suitability of products for certain types of applications are based on Vishay's knowledge of typical requirements that are often placed on Vishay products in generic applications. Such statements are not binding statements about the suitability of products for a particular application. It is the customer's responsibility to validate that a particular product with the properties described in the product specification is suitable for use in a particular application. Parameters provided in datasheets and / or specifications may vary in different applications and performance may vary over time. All operating parameters, including typical parameters, must be validated for each customer application by the customer's technical experts. Product specifications do not expand or otherwise modify Vishay's terms and conditions of purchase, including but not limited to the warranty expressed therein.

Hyperlinks included in this datasheet may direct users to third-party websites. These links are provided as a convenience and for informational purposes only. Inclusion of these hyperlinks does not constitute an endorsement or an approval by Vishay of any of the products, services or opinions of the corporation, organization or individual associated with the third-party website. Vishay disclaims any and all liability and bears no responsibility for the accuracy, legality or content of the third-party website or for that of subsequent links.

Vishay products are not designed for use in life-saving or life-sustaining applications or any application in which the failure of the Vishay product could result in personal injury or death unless specifically qualified in writing by Vishay. Customers using or selling Vishay products not expressly indicated for use in such applications do so at their own risk. Please contact authorized Vishay personnel to obtain written terms and conditions regarding products designed for such applications.

No license, express or implied, by estoppel or otherwise, to any intellectual property rights is granted by this document or by any conduct of Vishay. Product names and markings noted herein may be trademarks of their respective owners.

© 2024 VISHAY INTERTECHNOLOGY, INC. ALL RIGHTS RESERVED

THIS DOCUMENT IS SUBJECT TO CHANGE WITHOUT NOTICE. THE PRODUCTS DESCRIBED HEREIN AND THIS DOCUMENT ARE SUBJECT TO SPECIFIC DISCLAIMERS, SET FORTH AT www.vishay.com/doc?91000